N-8031MS Y

MASTER STATION

The N-8031MS is a flush- or surface-mount master station designed to operate in conjunction with TOA IP Intercom Exchange and features high quality hands-free conversation. Connecting a foot switch or other external switch to the external dial input terminal permits one-touch dialing operation by way of such switches. Handset conversation can be established in conjunction with the optional RS-191.

Key features

- Hands-free or handset conversation
- Contact Input
- High sound quality
- Status LED

Specifications

* 0 dB = 1 V

Power Source	48 V DC (supplied from the IP intercom exchange (option)
Power Consumption	1.8 W (at rated), 2.4 W (max.)
Wiring Method	1 set of twisted pair cable
Transmission System	2 wire 160 kbps echo canceller transmission system
Signal Level	Under 0 dB*
Speech Method	Hands-free conversation (Handset conversation can be established in conjunction with the RS-191(option).)
Audio Frequency Range	300 Hz - 7 kHz
Transmission Range	Max. 1500 m (#0.65 mm, Loop resistance 170 Ω)
Hands-free	Speaker: 5.7 cm cone-type, 0.6 W, 8 Ω Microphone: Omni-directional electret condenser microphone
External Dial Input	No-voltage make contact input, open voltage: 5 V DC, short-circuit current: 1mA, screwless connector (5 pins)
Indication	Status lamp
Line Connecting Terminal	Pin header (2 pins)
Installation Method	Flush-mount/Surface-mount
Operating Temperature	0 # to +40 #
Operating Humidity	Under 90 % RH (no condensation)
Finish	Panel: Stainless steel (SUS304), hairline
Dimensions	115 (W) x 254 (H) x 54.6 (D) mm
Weight	850 g
Included Accessories	Box mounting screw (No.6-32UNC x 18) …4, Box mounting screw (M4 x 25) …4, Removable terminal plug (2 pins, preinstalled on the unit) …1, Acoustic absorbent …1, Handset jumper (8 pins, preinstalled on the unit) …1, Ferrite clamp …1
Optional Accessories	For flush-mount: Back Box YC-241 For surface-mount: Wall-mount Box YC-251

Dimensions

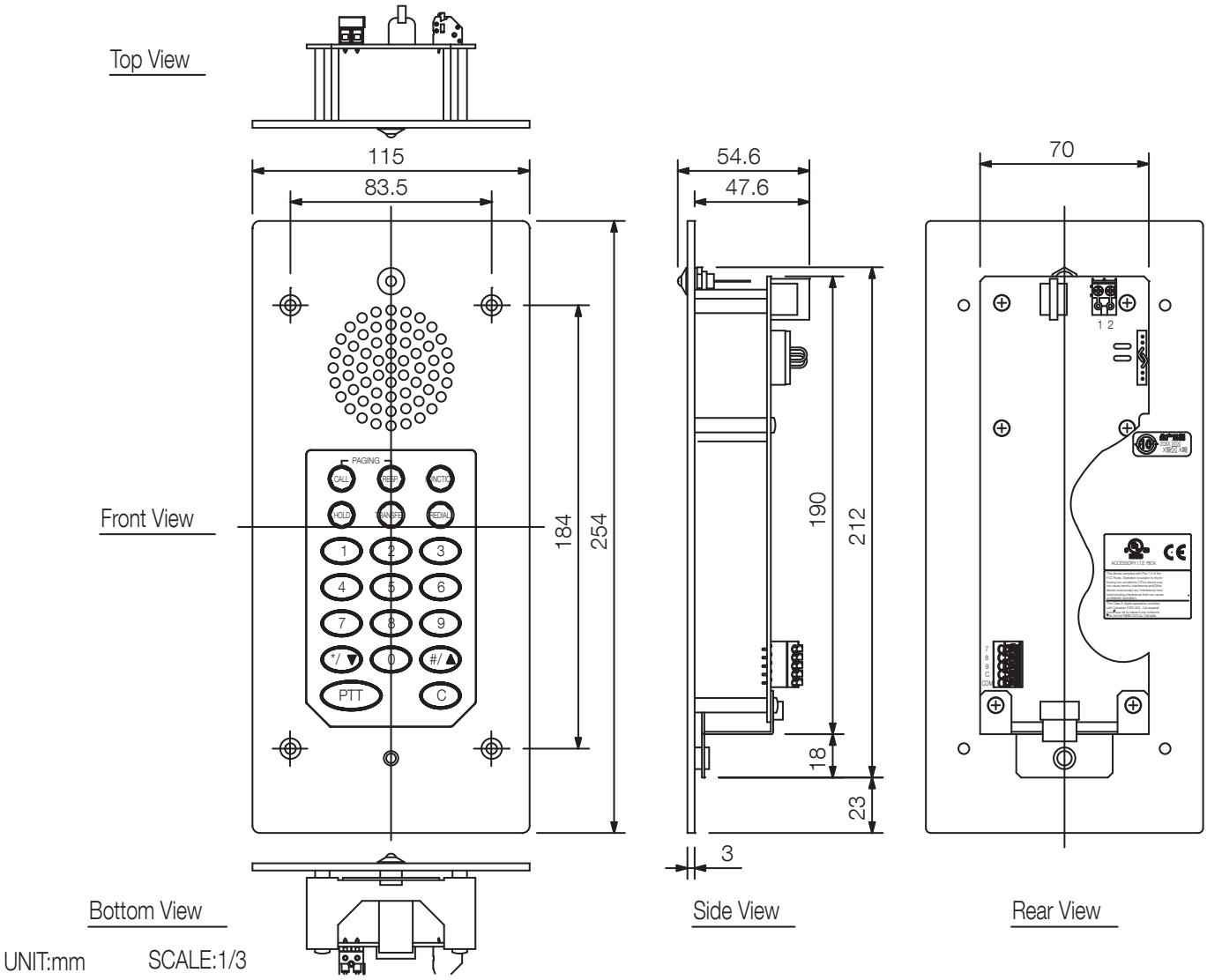
Top View
115
83.5
Front View
PAGING
CALL
BEEP
FUNCTION
HOLD
CONFER
REDIAL
1
2
3
4
5
6
7
8
9
*/▼
0
#/▲
PTT
C
184
254
54.6
47.6
190
212
18
23
3
Side View
70
1 2
Rear View
Bottom View
UNIT:mm
SCALE:1/3

A&E specifications

Single / surface main station with speakerphone with echo cancellation, Wandein-/ build, 4 control inputs for automatic call selection (for example connecting footswitch), optional handset.
10 Buttons, 4 programmable speed dial buttons, 2 function keys, talk priority button, delete button, call button (for announcement), answer key (for announcement), hold-down button, transfer button (manual call forwarding), redial.
Function call button for activation control output, call forwarding, Office transfer, time-based call forwarding, busy forwarding, background music.