MantelMount

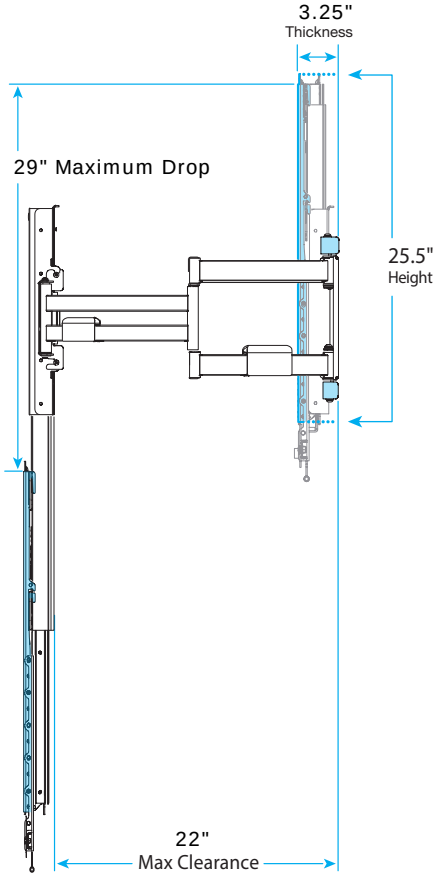

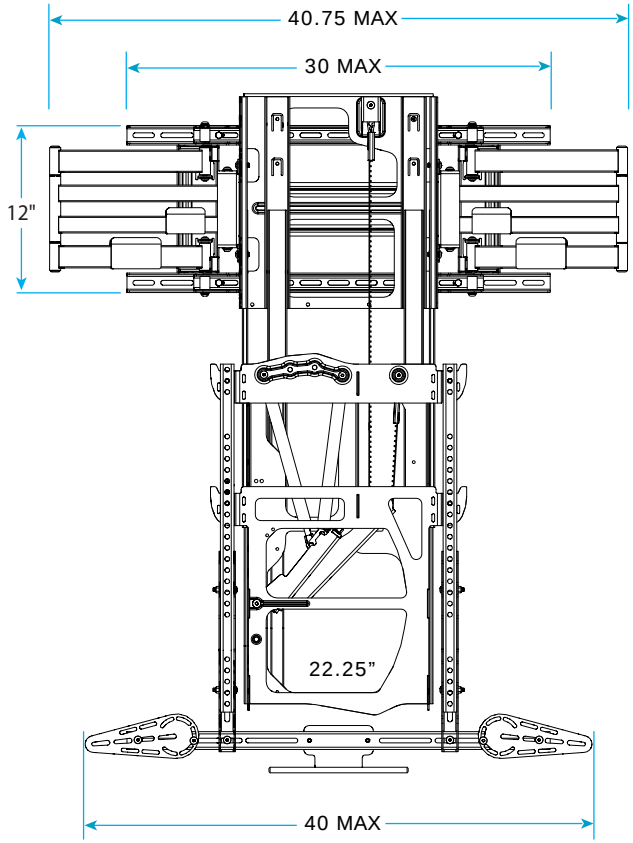

MantelMount MAX1 Pull Down and Swivel TV Mount

TV Weight Capacity: 20-90 pounds
TV Size: 50" to 86" (With Soundbar)
55" to 86" (Without Soundbar)
Maximum Lowering Distance: 29"
Thickness from Wall: 3.25"
Max Mantel Clearance 22
Weight: 65lb

Package Dimensions: 44.5" x 20" x 6"
Swivel: 40° Left and 40° Right
Steel Thickness: 3mm
VESA Pattern: Up to 600mm x 600mm
ADDL Features: Wall Plate Covers, Horizontal Sound Bar Adapter, Heat Sensor Handle

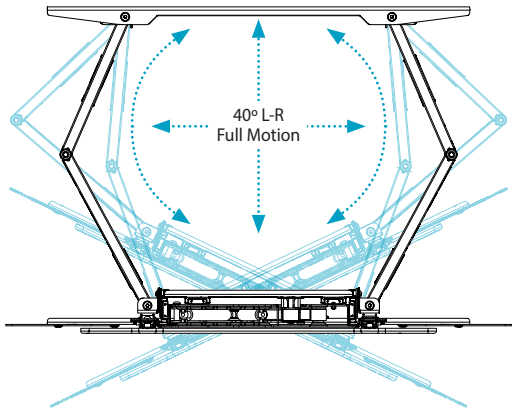

MM815 Dimensions Diagram 07-24