RS-144

SW PANEL

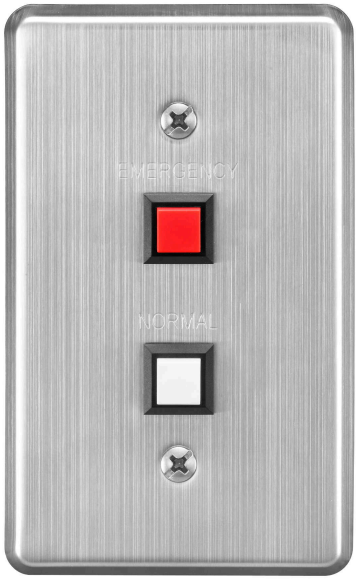

The RS-144 is a switch panel designed for use with the N-8000RS or N-8010RS 2-Core Shielded Substation Interface Unit. It is equipped with a Emergency button and Normal button, and can be installed in a 1-gang electrical box. By connecting a high impedance speaker to it, hands-free conversation with the master station can be made through its speaker. Also, it can be used in connection with the RS-141 IP Intercom Option Handset.

Key features

- Indoor use
- 2 call buttons
- Half-duplex conversation
- Handset conversation (with optional RS-141)
- Conversation via external speaker (optional)

Specifications

Call Button	Momentary (EMERGENCY, NORMAL)
Wiring	Two-core shielded cable
Transmission Range	0.5 km (546 yd)/#0.5 mm (AWG24) 0.8 km (874 yd)/#0.65 mm (AWG22) 1.3 km (1421 yd)/#0.9 mm (AWG19)
Operating Temperature	0 # to +40 # (32 # to 104 #)
Finish	Plate: Stainless steel, hairline Call-in Switch (emergency): resin, red Call-in Switch (normal) : resin, white
Dimensions	70 (W) x 115 (H) x 28.6 (D) mm (2.76" x 4.53" x 1.13")
Weight	80 g (0.18 lb)
Included Accessories	Mounting bracket ……1, bracket mounting screw (No.6-32UNC x 18) ……2, Box mounting screw (M4 x 30) ……2, Box mounting screw (No.6-32UNC x 30) ……2
Recommended Box	Flush-mount box: YC-801 (option) Wall-mount box : YC-802 (option)

Dimensions

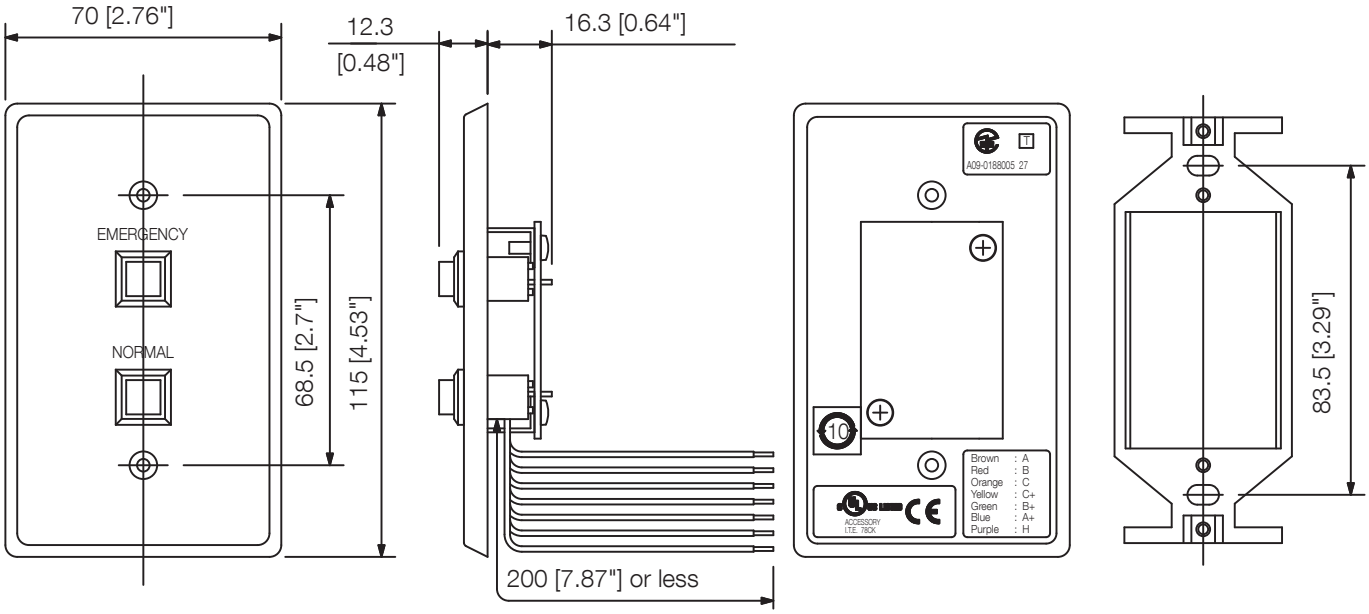

Front View | Side View | Rear View | Mounting bracket (accessory)

UNIT:mm SCALE:1/2

A&E specifications

UNDEFINED TEXT