OWNER'S MANUAL

LG LED Signage

(SYSTEM CONTROLLER)

Please read this manual carefully before operating your set and retain it for future reference.

CSAB-0072

www.lg.com

Copyright © 2022 LG Electronics Inc. All Rights Reserved.

ENGLISH

TABLE OF CONTENTS

SAFETY PRECAUTIONS 4

- Precautions for the AC Adapter and Power. 5
- Precautions for Moving the Product 7
- Precautions for Installing the Product..... 8
- Precautions for Cleaning the Product 10
- Precautions for Using the Product..... 11
- Precautions for Using the Remote control 13
- Product Disposal 14

ASSEMBLING AND PREPARING 15

- How to Connect a Cable to the IR-APL Ports 16
- Precautions for Using the IR-APL Port 17
- Optional Accessories..... 18
- Parts and Buttons 19
- Rack Installation (Optional)..... 21
- IR Receiver 22

INSTALLATION GUIDE 23

SETTINGS 33

- Home 33
- Ez Setting..... 34
- General 43
- Display..... 54
- Sound..... 61
- Admin 64

CONTENT MANAGER 66

- Web Login..... 66
- Content Manager..... 66
- Group Manager 2.0..... 73
- Gallery Mode 76
- ScreenShare 77

MANAGEMENT TOOLS..... 78

- Control Manager 78
- Picture ID 79

IR CODE 80

CONTROLLING MULTIPLE PRODUCTS..... 82

- Connecting cables 82
- Communication Parameter..... 83
- Command Reference List 84
- Transmission/Reception Protocol..... 89

REMOTE CONTROL 117

MAKING CONNECTIONS..... 119

- Connecting with LAN Cable..... 119
- Connecting to PC..... 120
- Connecting to External Devices..... 121
- Using the Input List..... 121
- Connecting Multiple Monitors..... 122

CONNECT A USB DEVICE 123

TROUBLESHOOTING..... 125

PRODUCT SPECIFICATIONS. 127

LICENSES..... 132

SAFETY PRECAUTIONS

The safety precautions are intended to prevent unexpected danger or harm by helping the user to use the product safely and for its intended purpose.

WARNING

If you ignore the warning message, you may be seriously injured or there is a possibility of accident or death.

CAUTION

If you ignore the caution message, you may be slightly injured or the product may be damaged.

WARNING

Indoor Use Only.

Precautions for the AC Adapter and Power

WARNING

- Use only the power cord or AC adapter provided or approved by LG Electronics, Inc. If you use another power cord, make sure that it is certified by the national standards. If the power cable is faulty in any way, please contact the manufacturer or the nearest authorised service center for a replacement.
- Operate the display only from a power source(i.e. voltage) indicated in the product specification.
  - Otherwise the product can be damaged, fire can occur or you may be electrocuted. If you are not sure what type of power supply you have, consult a certified installation company.
- Make sure the power cord connect to a properly grounded outlet.
  - If you do not you may be electrocuted or injured or the product can be damaged.
- Insert the power plug or AC adapter firmly so it cannot come loose.
  - Poor connection may cause a fire or electric shock.
- In the presence of thunder and lightning, never touch the power cord and signal cable because it can be very dangerous.
  - It can cause electric shock.
- Be careful not to step or place heavy objects (electronic appliances, clothing, etc.) on the power cord or AC adapter. Additionally, do not bend or pull out the power cord or AC adapter with excessive force.
  - Damaged power cords may cause a fire or electric shock.
- Do not connect power cord or AC adapter damaged with sharp objects to power outlet.
  - You may be electrocuted.
- Do not insert a conductor (like a metal chopstick) into one end of the power cord while the other end is connected to the input terminal on the wall. Additionally, do not touch the power cord right after it is unplugged.
  - You may be electrocuted.
- Do not use with a multi-outlet connected by many electrical product and heating devices. Use an exclusive multi-outlet with a grounding terminal.
  - A fire can break out due to overheating.

- If water or any foreign substance goes inside the product, disconnect the power cord immediately and contact the service center.
  - Otherwise, this may cause a fire or electric shock due to damage to the product.
- Keep the power cord or AC adapter away from any heating devices.
  - The cord coating may melt and cause fire or electric shock.
- Never disassemble, repair or modify the power cord or AC adapter.
  - This may cause a fire or electric shock.
- The main cutoff device is the power cord. Please make sure the product is installed near the wall outlet and that it is easily accessible.
- As long as this unit is connected to the AC wall outlet, it is not disconnected from the AC power source even if the unit is turned off.
- Power consumption will be '0' only when the power plug is unplugged.
- Use the appliance coupler as the disconnect device.

⚠ CAUTION

- If the outlet pins of the power plug or AC adapter is covered with dust, be sure to wipe them and keep them clean.
  - Overheating due to layers of dust may cause a fire or electric shock.
- If the outlet pins of the power plug or AC adapter is covered with water be sure to wipe them and keep them clean. Additionally, Do not touch the power plug or AC adapter with wet hands.
  - This may cause an electric shock.
- Do not turn the product on or off by plugging in or unplugging the power plug from the power outlet. Do not use the power socket as a switch.
  - This may cause an electric shock or product malfunction.
- Do not unplug the power cord while the product is in use.
  - Electrical shock can damage the product.

Precautions for Moving the Product

WARNING

- Contact the service center before moving the product.
  - It may cause electric shock and damage the product.
- Make sure the product is turned off, unplugged, and all cables have been removed before the product is moved.
  - You may be electrocuted or the product can be damaged.
- When moving the product, do not shock or cause an impact on the front panel.
  - You may be electrocuted or the product can be damaged.
- Use the correct number of people according to the weight of the product. (Under 25 Kg per person use lifting equipment when exceeding 100 Kg)
  - If use the damaged product again, contact the service center because it can cause electric shock or fire.
- Do not hold it upside down while holding only the stand. (It is for stand supported models only.)
  - This may cause stand warping, panel damage and other types of product damage.

CAUTION

- Do not dispose of the product-packing box. Use it when moving by putting the product in the box to carry it.

Precautions for Installing the Product

WARNING

- Contact the service center before installing the product.
  - It can cause electric shock and damage the product.
- Do not drop an object on or impact on the product. Keep out of reach of children and do not place toys or objects near the product to prevent throwing things on the product screen.
  - It can cause injury to human, problem to product and damage the display.
- Do not put heavy objects on, or hang from, the product.
  - If the product collapses or is dropped, you may be injured.
- Do not touch the surface of the product if it overheats.
  - It can cause injury to human.
- Install the product firmly fixed on a floor, wall, etc. to prepare against external impact such as wind and earthquake.
  - You must refer to the manual provided.
- Prevent Children from climbing or hanging on the product.
  - If the product collapses or is dropped, you may be injured.
- Do not install it where there are heating devices such as electrical heaters or lighting equipment.
  - Fire, electrical shock, malfunction may occur.
- Do not install this product by yourself as you may injure yourself or cause damage to the product. Please contact service engineer authorised by service center.
- Do not install this product on a wall if it could be exposed to oil or oil mist.
  - This may damage the product and cause it to fall.
- Do not leave the power or signal cable, etc. on the pathway.
  - This could cause a trip or fall, which could cause an electrical shock, fire, product breakdown, or injury.
- Do not let the product drop when connecting it to an external device connected with a short cable.
  - This may cause injury and damage to the product.
- If you dropped the product or the case is broken, turn off the product and unplug the power cord and contact the service center.
  - If you continue to use without taking proper measures, electrical shock or fire can occur.
- Install the product in a dry place where it is not near dust and water. Avoid high temperatures and humidity.
  - This may cause electrical shock, fire or product damage.
- Safely install the product in a place that can hold the weight of the product.
  - A lack of strength may cause the product to fall.
- Take a comfortable and natural position to relax the muscles when working with a product.

⚠ CAUTION

- Install the product where no Electromagnetic Interference occurs.
- If you install the product in a place that does not meet the recommended conditions, this may cause serious damage to the product's picture quality, life cycle, and appearance. Please check with service engineer before installing. Please do not install the product in places such as where there is an abundance of fine dust or oil mist, chemical substances are used, exposed to direct sunlight, the temperature is very high or low, the humidity is very high.
- Make sure the product is well ventilated by Installing at a distance (100 mm or more) from the wall.
  - If you install the product too close to the wall, it may be deformed or fire can break out due to internal heat buildup.
- Do not cover the product with a tablecloth or a curtain or other materials (e.g. plastic) while plugged in. Do not block the ventilation hole of the product.
  - The product can be deformed or fire can break out due to overheating inside the product.
- Do not install the product in an area with poor ventilation (e.g. on a bookshelf, in a closet) or outside and avoid placing on cushions or carpets.
  - The product could catch fire due to overheating inside the product.
- Install the product on a flat and stable place that is large enough to support the product.
  - If the product is dropped, you may be injured or the product may be broken.
- When installing the product on a shelf or cabinet, make sure that the bottom end of the product is not protruding forward.
  - The product may fall due to unbalanced center of gravity, which may cause personal injury or damage to the product. Be sure to use cabinets or shelves that fit your product.

Precautions for Cleaning the Product

WARNING

- Keep the product clean at all times.
  - If you don't clean the unit for a long time and it becomes covered in dust, it can cause fire or product damage.
- When you need to clean the inside of the product, you must contact the service center.
  - Otherwise, cleaning without support may cause a fire, electric shock, or damage to the product.
- When cleaning the product, unplug the power cord and wipe gently with a soft cloth to prevent scratching.
  - An electric shock may occur or damage to the screen if its scratched.
- Do not physically come in contact with the screen of the LED Package.
  - This may cause damage to the product.
- To clean the product, use an air gun to lightly remove dust from the front frame and the screen.
  - If there are foreign substances in between the LEDs on the screen, it may cause a defect on the screen.

CAUTION

- When cleaning the product or the screen, unplug the power cord and wipe it gently with a soft cloth. Do not spray water or other liquids directly on the product. Especially, do not clean your product with chemicals including glass cleaner, any type of air freshener, insecticide, lubricants, wax (car, industrial), abrasive, thinner, benzene, alcohol, etc., which can damage the product or its panel.
  - This may result in fire, electric shock or product damage (deformation, corrosion or breakage).

Precautions for Using the Product

WARNING

- Do not use the product in any environment with excessively high temperatures or humidity.
  - It may cause electrical shock or damage the product.
- If you use the product for a long period of time, take a rest from time to time to protect your vision.
  - Extended viewing could result in impaired vision.
- Listening at high volume or using for a long time can cause damage to your hearing.
- In the event that liquid or a foreign object falls into the product, please switch it off and unplug it from the wall outlet and contact the service center.
  - Otherwise, the product may cause fire or electric shock.
- In the event that no image appears on the screen or no sound is heard, stop using the product. Switch it off immediately, unplug it from the power outlet and contact the service center.
  - Otherwise, the product may cause fire or electric shock.
- Do not drop an object or impact on the product or screen.
  - It can cause injury to human, problem to product and damage the screen.
- If you can smell smoke or other odors or hear a strange sound, unplug the power cord and contact the service center.
  - If you continue to use the product without taking proper measures, it may cause electrical shock or fire.
- Do not attempt to disassemble, repair or modify the product yourself. Please contact service center if you need to repair it.
  - Fire or electric shock can occur.
- Do not place objects filled with liquids such as vases, cups etc. on or over the product to prevent liquid from entering the product.
  - Failure to do so may result in fire, electric shock, malfunction or deformation.
- Do not push hard on or scratch the product's surface with your hands or sharp objects, such as nails, pencils or pens. Do not shock or scratch the front and sides of the screen with metallic objects.
  - This may damage the products and cause it to malfunction.
- Do not touch the product if it has been exposed to sunlight or an intense light because it could be hot.

- Do not use high voltage electrical goods near the product (e.g., a bug zapper).
  - This may result in product malfunction if it receives an electrical shock.
- If there is a gas leak, do not touch the outlet, and open the windows for ventilation.
  - Otherwise, the product may cause fire or electric shock.
- If you dropped the product or the case is broken, turn off the product and unplug the power cord.
  - If you continue to use without taking proper measures, electrical shock or fire can occur. Contact the service center.
- Keep small accessories out of the reach of children.
  - If a child swallows it, consult a doctor immediately.
- Keep out of reach of children from the product. Also, do not throw toys or objects to the product or screen.
  - It can cause injury to human, problem to product and damage the screen.
- All the power sources must be disconnected by removing the power cables to remove all power from the unit.

⚠ CAUTION

- This panel is an advanced product that contains millions of pixels. You may occasionally see pixel spots when viewing the screen. Since these deactivated pixels are not a defect, the performance and reliability of the product is not affected.
- Do not put or store inflammable substances near the product.
  - There is a danger of explosion or fire.
- Keep the proper distance from the product.
  - It can cause damage to your vision if you look at the product too closely.
- Set the appropriate resolution and frequency by products.
  - It can cause damage to your vision.
- Take a regular break when working with the product for a long time.

Precautions for Using the Remote control

WARNING

- Avoid places with high humidity.
  - It may cause electrical shock or damage the product.
- Do not expose batteries to excessive heat, such as direct sunlight, open fireplace, and electric heaters.
  - It may cause fire and you may be injured.
- Make sure that children do not swallow the remote control batteries when you replace them. Keep batteries out of reach of children.
  - If a child swallows a battery, consult a doctor immediately.
- Do not dispose of batteries in a fire.
  - Please dispose batteries at a local recycling center or a retail store that handles batteries.
- Used batteries, which include rechargeable batteries, should be recycled separately from waste.
  - Please dispose used batteries and rechargeable batteries at a local recycling center or a retail store that handles batteries.

CAUTION

- Do not short circuit and disassemble of batteries.
  - It may cause electrical shock or fire.
- The remote control may not function properly in sunlight or under a strong lamp. Move the product if it is being used in these conditions.
- Check if there is any obstacle between the product and the remote control.
- Do not mix new batteries with old batteries.
  - Overheating or leaking batteries may cause fire or electric shock.
- Only use the specified type of battery. Do not insert batteries that are not rechargeable into the charger.
  - Overheating or leaking batteries may cause fire or electric shock.

Product Disposal

- Do not dispose of this product with general household waste.
- Disposal of this product must be carried out in accordance to the regulations of your local authority.

ASSEMBLING AND PREPARING

CAUTION

- Always use genuine components to ensure safety and durability of the product.
- The product warranty will not cover damage or injury caused by the use of unauthorised components.
- Replacing the batteries with the wrong type may result in explosion.
- Batteries that have reached end-of-life should be disposed in an appropriate manner.

NOTE

- The accessories provided with your product may vary depending on the model.
- Product specifications or contents in this manual may be changed without prior notice due to upgrade of product functions.
- The warranty will not cover any damage caused by using the product in an excessively dusty environment.
- SuperSign Software & Manual
  - Visit *http://partner.lge.com* to download the latest SuperSign software and manual.

How to Connect a Cable to the IR-APL Ports

- Use an IR-APL LAN cable that is less than 5 meters long.
- IR-APL connection synchronizes the average picture level (APL) across products. Dynamic Brightness should be turned on during this process.
- A LAN cable should connect to the IR-APL ports in a closed loop. Refer to the basic connection layout below on how to connect a cable.

Basic Connection Layout for IR-APL LAN Cables

- Example) Connecting three products

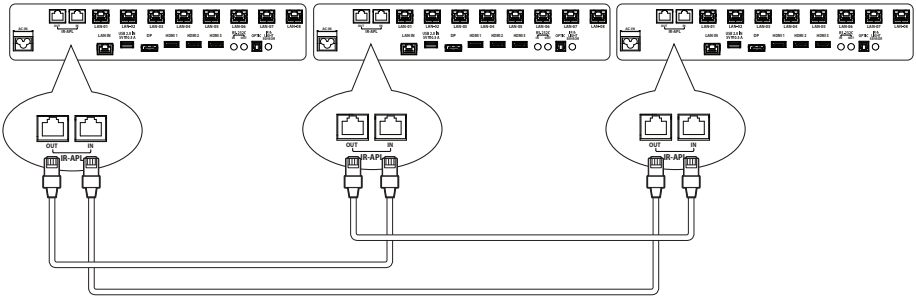

NOTE

- An incorrectly connected cable will result in the APL functioning abnormally.

Precautions for Using the IR-APL Port

- Use the ferrite core to reduce the electromagnetic interference in the IR-APL LAN cable.
  Wrap the IR-APL LAN cable once on the ferrite core B and 3 times on the ferrite core A.
  Place the ferrite core close to the set and an external device.

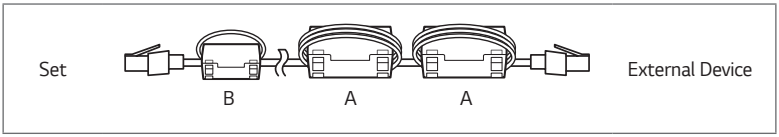

- A ferrite core can be used if it satisfies the specifications below.

	ITEM	IMPEDANCE		Manufacturer
A (Gray)	BNF-2629	10 MHz	80 Ω Min.	FEELUX Co.,Ltd.
		25 MHz	110 Ω Min.	
		100 MHz	110 Ω Min.	
B (Black)	BNF-2629	10 MHz	440 Ω Min.	FEELUX Co.,Ltd.
		12 MHz	475 Ω Min.	
		15 MHz	505 Ω Min.	
		20 MHz	535 Ω Min.	
		40 MHz	549 Ω Min.	

Optional Accessories

Without prior notice, optional accessories are subject to change to improve the performance of the product, and new accessories may be added. The illustrations in this manual may differ from the actual product and optional accessories.

LED Screen
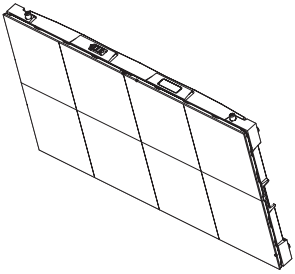
LSAB007-M2, LSAB007-Q2, LSAB007-N2, LSAB007-U2, LSAB007-S2, LSAB007-T2

NOTE

- Optional accessories are only available for some models. If necessary, please purchase them separately.

Parts and Buttons

The illustrations may differ depending on the model.

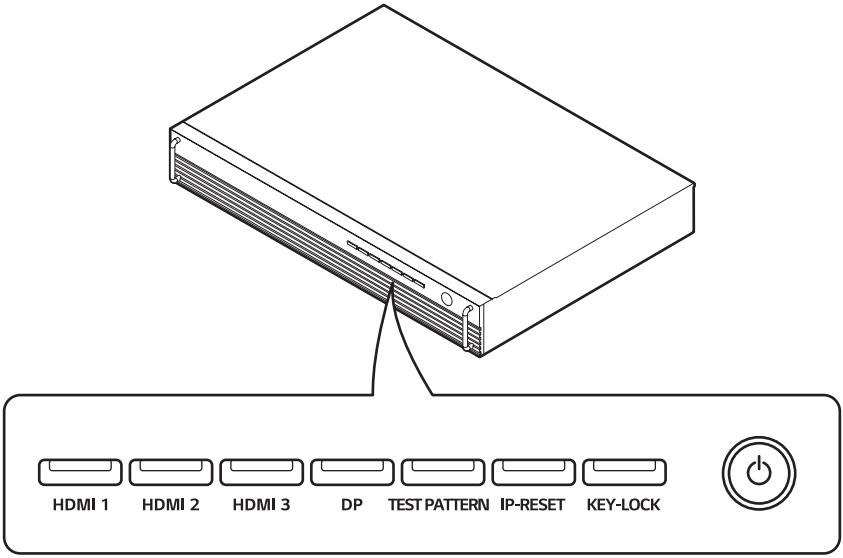

	Explanation
⏻	• Turns the power on and off.
HDMI 1	• Switches to HDMI 1 input.
HDMI 2	• Switches to HDMI 2 input.
HDMI 3	• Switches to HDMI 3 input.
DP	• Switches to DP input.
TEST PATTERN	• Consecutively accesses/exits White/Red/Green/Blue Pattern.
IP-RESET	• Press and hold for 3 seconds or more to set the IP address to 192.168.0.101.
KEY-LOCK	• Press and hold for 3 seconds or more to access/exit Key Lock.

NOTE

- If you press **TEST PATTERN** to access the corresponding pattern, HDMI/DP screen will not be available. If you want to switch to the external input screen, repeatedly press the button until you exit from the pattern.

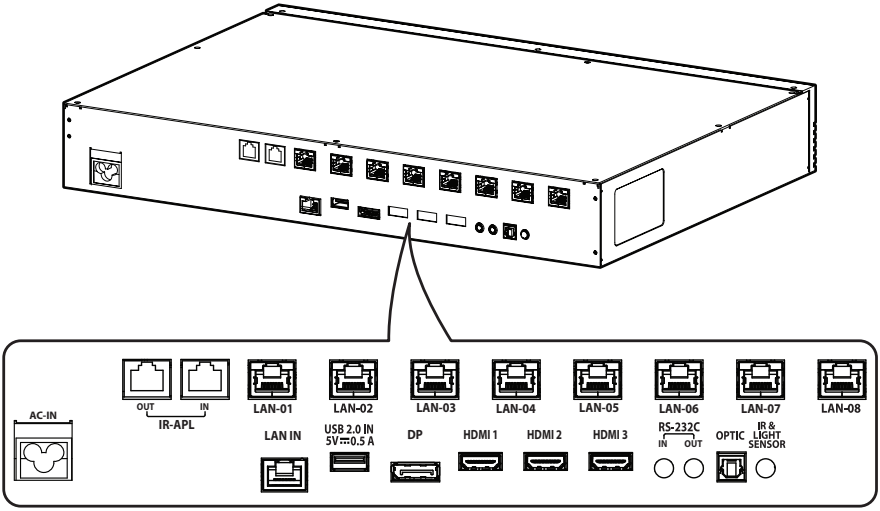
AC-IN
OUT
IN
IR-APL
LAN-01
LAN-02
LAN-03
LAN-04
LAN-05
LAN-06
LAN-07
LAN-08
LAN IN
USB 2.0 IN
5V ⎓ 0.5 A
DP
HDMI 1
HDMI 2
HDMI 3
RS-232C
IN
OUT
OPTIC
IR &
LIGHT
SENSOR

Rack Installation (Optional)

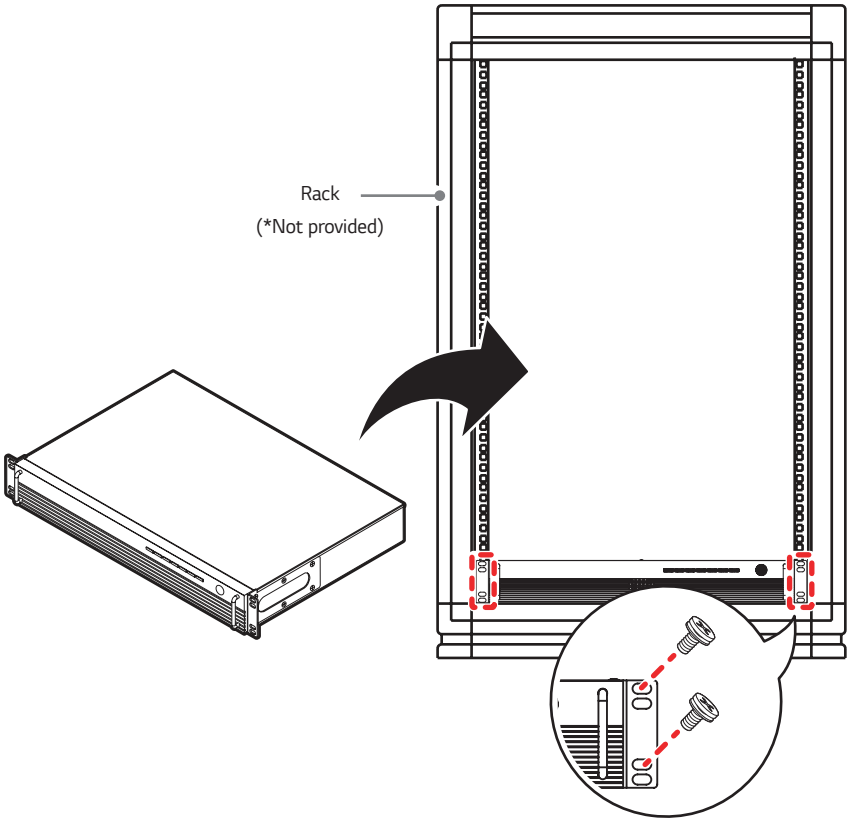

NOTE

- Use the bolts included in the rack to fasten the product.

IR Receiver

This allows a remote control sensor to be placed in a custom location. All products can receive signals normally after the infrared receiver terminal (IR & LIGHT SENSOR) is connected to the IR.

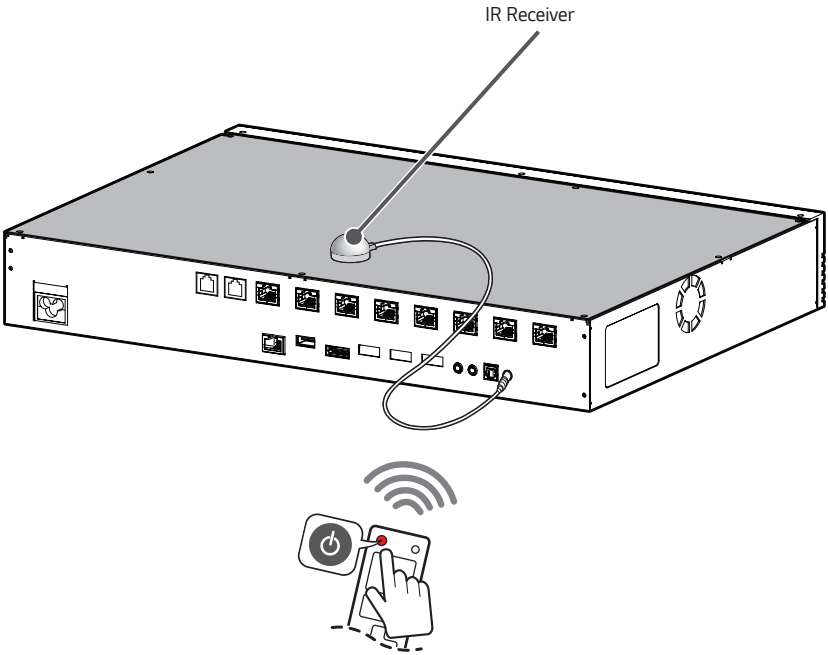

LG
Life's Good

LG LED Signage
(SYSTEM CONTROLLER)

CSAB-0072

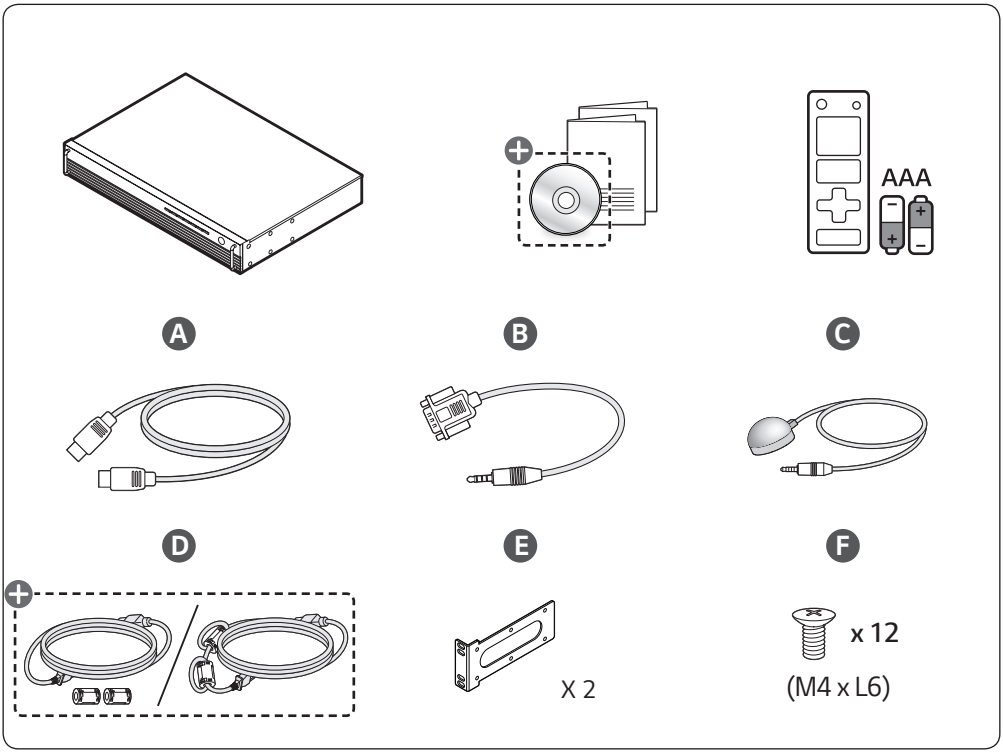

Depending on country / Závisí na zemi / Afhængigt af landet / En función del país / Maan mukaan / Selon pays / Abhängig vom Land / Ανάλογα με τη χώρα / Országfüggő / Tergantung pada negaranya / A seconda del Paese / Елге байланысты / 지역에 따라 다름 / Afhankelijk van het land / Avhengig av land / Zależnie od kraju / Dependendo do país / В зависимости от страны / Závisí od krajiny / Beroende på land / 視國家, 地區而定 / Ülkeye bağlı / Залежно від країни / Mamlakatga bog'liq ravishda / 国によって異なります / حسب البلد

- Worldwide : www.lg.com/id-manual
- 한국 : www.lgservice.co.kr
- SuperSign : http://partner.lge.com

ENGLISH	You can download more detailed information on our website by searching the model number provided on the cover page.
한국어	표지의 모델명을 웹 사이트에서 검색하면 보다 상세한 제품정보를 볼 수 있습니다.
ČESKY	Podrobnější informace si můžete stáhnout na našich webových stránkách po vyhledání čísla modelu uvedeného na titulní straně.
DANSK	Du kan downloade mere detaljerede oplysninger på vores websted ved at søge på det anførte modelnummer på forsiden.
ESPAÑOL	Puede descargar más información detallada en nuestro sitio web buscando el número de modelo que se indica en la portada.
SUOMI	Voit ladata tarkempia tietoja verkkosivustoltamme hakemalla kansisivulla olevaa mallinumeroa.
FRANÇAIS	Pour télécharger des informations plus détaillées, veuillez rechercher sur notre site Web le numéro de modèle indiqué sur la page de titre.
DEUTSCH	Sie können auf unserer Webseite die auf der Startseite zu sehende Modellnummer eingeben und dadurch mehr darüber erfahren.
ΕΛΛΗΝΙΚΑ	Μπορείτε να κατεβάσετε πιο λεπτομερείς πληροφορίες από τον ιστότοπό μας αναζητώντας τον αριθμό μοντέλου που αναγράφεται στο εξώφυλλο.
MAGYAR	A weboldalunkról részletesebb információkat is letölthet, ha rákeres a fedőlapon megadott modellszámra.
BAHASA INDONESIA	Anda dapat mengunduh informasi terperinci di situs web kami dengan mencari nomor model yang disediakan di halaman sampul.
ITALIANO	È possibile scaricare ulteriori informazioni dal nostro sito web cercando sulla pagina iniziale il numero del modello in dotazione.
ҚАЗАҚША	Мұқаба бетінде берілген модель нөмірін іздеу арқылы қосымша толық ақпаратты біздің веб-сайтымыздан жүктеп алуыңызға болады.
NEDERLANDS	U kunt meer gedetailleerde informatie op onze website downloaden door te zoeken op het op het omslagblad vermelde modelnummer.
NORSK	Du kan laste ned mer detaljert informasjon på nettsiden vår, ved å søke etter modellnummeret oppgitt på forsiden.
POLSKI	Bardziej szczegółowe informacje możesz pobrać z naszej strony internetowej, wyszukując model podany na okładce.
PORTUGUÊS	Para transferir informações mais detalhadas no nosso site, procure o número de modelo indicado na página de rosto.
РУССКИЙ	Более подробные сведения можно загрузить на нашем веб-сайте по номеру модели, указанному на обложке.

SLOVENČINA Podrobnejšie informácie si môžete prevziať z našej webovej stránky vyhľadaním čísla modelu uvedeného na titulnej stránke.

SVENSKA Du kan hämta ned mer detaljerad information från vår hemsida genom att söka på det modellnummer som anges på omslaget.

台灣語 您可以透過搜尋封面頁上提供的型號，在我們的網站上下載更詳細的資訊。

TÜRKÇE Kapak sayfasında verilen model numarasını aratarak web sitemiz üzerinden daha ayrıntılı bilgi indirebilirsiniz.

УКРАЇНСЬКА Докладніші відомості можна завантажити на нашому веб-сайті за номером моделі, вказаним на обкладинці.

O'ZBEKCHA Muqova sahifasida taqdim etilgan model raqamini qidirish orqali batafsilroq ma'lumotni yuklab olishingiz mumkin.

日本語 表紙のモデル番号をLGEのWebサイトで検索することで詳細な情報をダウンロードすることができます。

العربية يُمكنك تنزيل معلومات أكثر تفصيلاً على موقعنا الإلكتروني من خلال البحث عن رقم الطراز المُقدم على صفحة الغلاف.

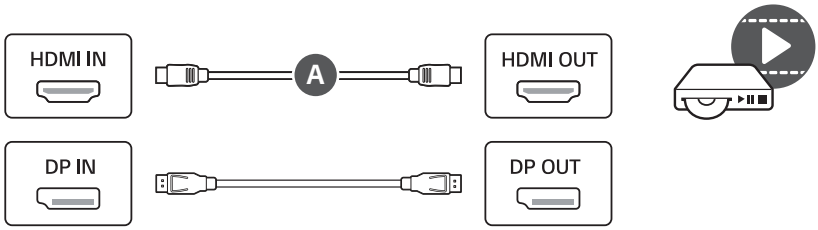
HDMI IN
A
HDMI OUT
DP IN
DP OUT

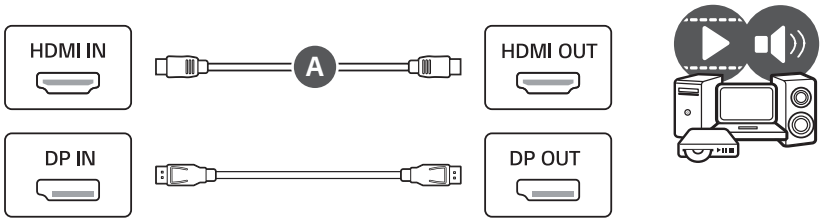
HDMI IN
A
HDMI OUT
DP IN
DP OUT

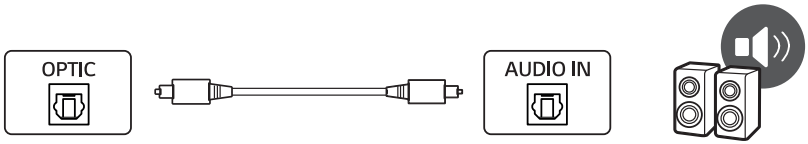
OPTIC
AUDIO IN

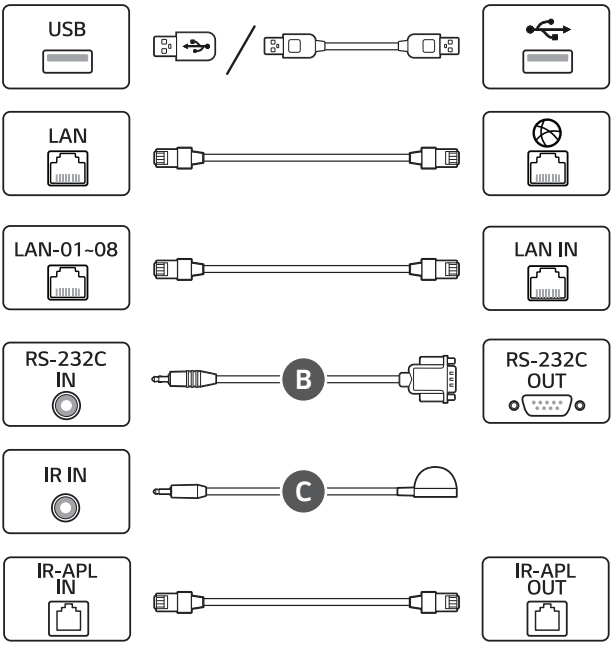
USB
LAN
LAN-01~08
LAN IN
RS-232C IN
B
RS-232C OUT
IR IN
C
IR-APL IN
IR-APL OUT

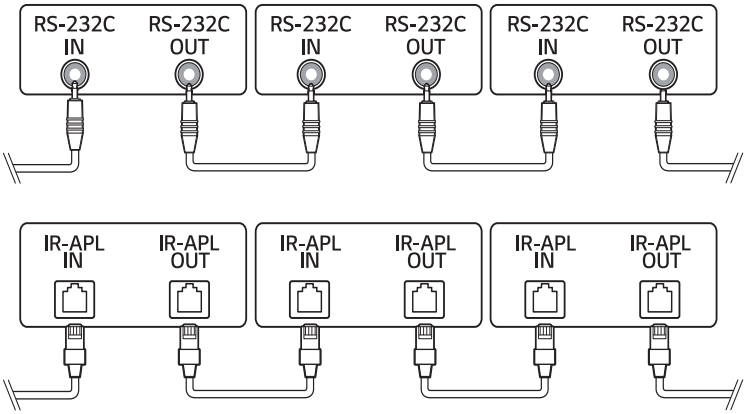
RS-232C
IN
RS-232C
OUT
RS-232C
IN
RS-232C
OUT
RS-232C
IN
RS-232C
OUT
IR-APL
IN
IR-APL
OUT
IR-APL
IN
IR-APL
OUT
IR-APL
IN
IR-APL
OUT

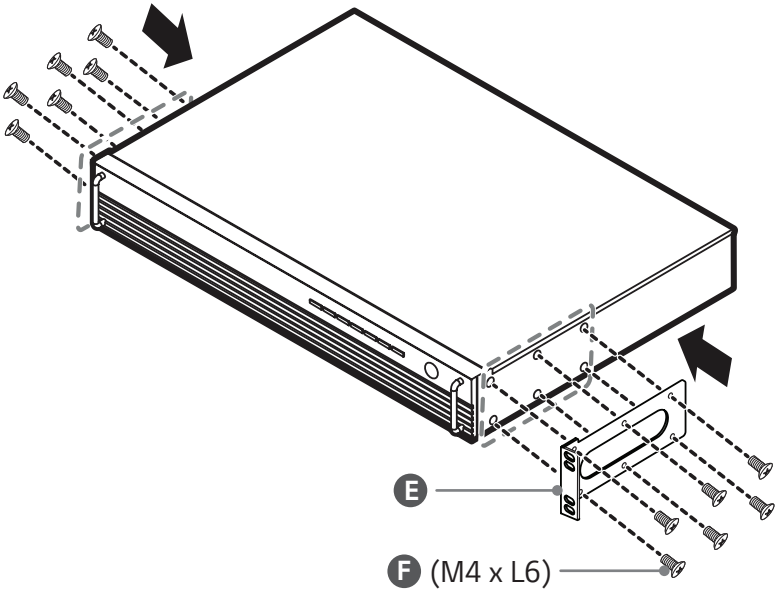
E
F (M4 x L6)

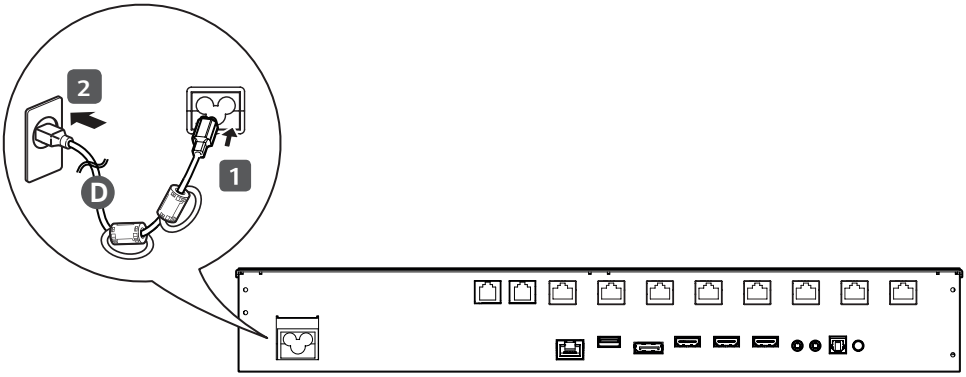
2
1
D

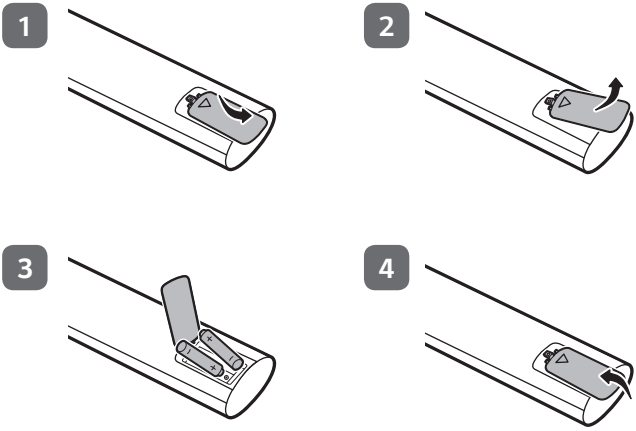
1
2
3
4

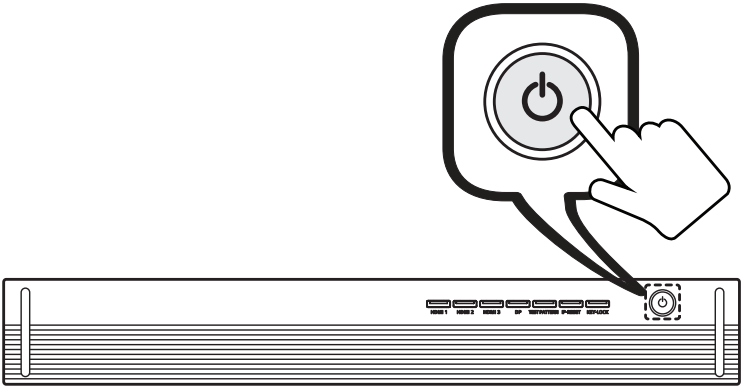

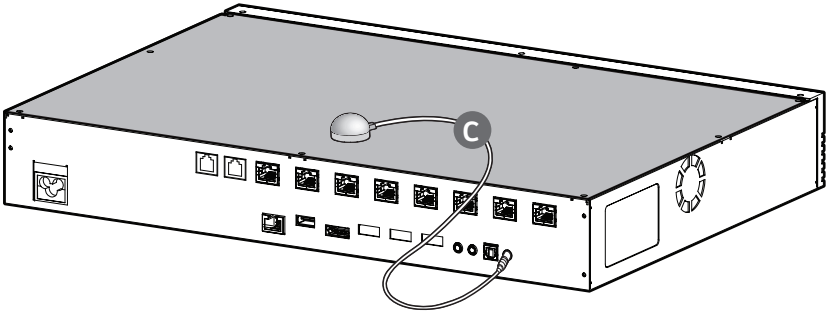
C

To obtain the source code that is contained in this product, under GPL, LGPL, MPL, and other open source licenses that have the obligation to disclose source code, and to access all referred license terms, copyright notices and other relevant documents, please visit *https://opensource.lge.com*.

LG Electronics will also provide open source code to you on CD-ROM for a charge covering the cost of performing such distribution (such as the cost of media, shipping, and handling) upon email request to *opensource@lge.com*.

This offer is valid to anyone in receipt of this information for a period of three years after our last shipment of this product.

NOTE

- Software-related content may be changed without prior notice due to upgrades of the product functions.
- Some features described in the User Manual may not be supported in certain models and countries.
- Some submenus of each function may not be supported depending on the model.
- SNMP 2.0 is supported.

SETTINGS

Home

Global Buttons

CSAB, CSAA, CSAC, CBAE, CBAF, CBAA

- [MOBILE URL]: Provides information necessary to access the monitor set through an external device's browser. With this feature, you can view QR code and URL information. In addition, by accessing the URL, you can also run Content Manager and Group Manager 2.0, and Control Manager. (This feature is optimized for Google Chrome.)
- [Input]: Navigate to the external input selection screen
- [Setting]: Navigate to the Settings screen

Dashboard

CSAB, CSAA, CSAC, CBAE, CBAF, CBAA

- This feature displays key information about your Signage monitor in the center of the home screen. In the Dashboard, you can manually change settings by selecting the corresponding items.
- [Manual Download]: Downloads a manual by scanning a QR code.

NOTE

- If the dashboard is locked, the focus does not move.
- Some QR code apps on mobile devices may not work. (You can access the page to download manuals by visiting the provided address.)

[Content Manager]

CSAB, CSAA, CSAC, CBAE, CBAF, CBAA

- [Player]: Play a variety of content including images, videos, and SuperSign content.
- [Scheduler]: Manage schedules for content that will be played at different times.
- [Editor]: You can create your own content using templates and media files.
- [Group Manager 2.0]: Distribute content schedules and setting data to the connected device.

[Gallery Mode]

CSAB, CSAA, CSAC, CBAE, CBAF, CBAA

- This mode allows you to appreciate the natural environment and famous paintings.

Ez Setting

[Video Wall]

SETTINGS / ⚙ → [Ez Setting] → [Video Wall]

Set Video Wall options to create a wide visual canvas.

- [Tile Mode]: Turn [Tile Mode] on or off.
- [Tile Mode Settings]: Display a single integrated screen on multiple Signage monitors.
- [Simple Configuration]: automatically sets [Tile ID] based on the connection direction of the set RS232C.
  - When the [Set ID] of the connected set is complete, the performance of [Simple Configuration] is guaranteed only for the master set ([Set ID] 1).
    Run this function for the master set ([Set ID] 1).
- [Natural Mode]: Display the image excluding the area that overlaps with the monitor's bezel so that the image displayed has a more natural feel to it.
- [Frame Control]: Adjust the sets that run [Scan Inversion] and frame deviation.
  - When running [Scan Inversion], please run [Frame Control] for the sets that do not run [Scan Inversion].
- [Scan Inversion]: Reduce screen deviation between adjoining video walls by changing screen scanning method.
- [White Balance]: Configure white balance settings (White Pattern, R/G/B-Gain, and Luminance).
- [Reset]: Reset to initial settings.
- [Reboot to Apply]: Reboot the set to configure a changed Frame Control/Scan Inversion value.

NOTE

- When Tile Mode is enabled, automatically set [Frame Control] for odd numbered rows and [Scan Inversion] for even numbered rows.

[On/Off Scheduler]

CSAB, CSAA, CSAC, CBAE, CBAF, CBAA

SETTINGS / ⚙ → [Ez Setting] → [On/Off Scheduler]

Set a schedule to use your signage by time and day of the week.

- [On/Off Time Setting]: Set on/off times for each day of the week.
- [Holiday Setting]: Set holidays by date and by day of the week.

[SI Server Setting]

CSAB, CSAA, CSAC, CBAE, CBAF, CBAA

SETTINGS / ⚙ → [Ez Setting] → [SI Server Setting] → [SI Server Setting]

Set up to connect your signage to an external SI server. Set up a server environment for SI app installation.

SETTINGS / ⚙ → [Ez Setting] → [SI Server Setting] → [Developer Mode & Beanviser]

This feature provides great convenience to the app developers.

Set up to install and activate the Developer mode and BEANVISER app.

NOTE

- To use these features, an account (ID/PASSWORD) for webOS Signage developer website (*http://webossignage.developer.lge.com/*) is required.

[Server Setting]

CSAB, CSAA, CSAC, CBAE, CBAF, CBAA

SETTINGS / ⚙ → [Ez Setting] → [Server Setting]

Set up to connect your signage to a SuperSign server.

- CMS Server
- Control Server

[Fail Over]

CSAB, CSAA, CSAC, CBAE, CBAF, CBAA

SETTINGS / ⚙ → [Ez Setting] → [Fail Over]

Set the priority of the input devices when a fault occurs. Automatically play the content stored in the device or run the set app.

- [On/Off]: Turns [Fail Over] on or off.
- [Input Priority]: Set the priority of input sources for fail over.
- [Backup via storage]: When there is no input signal, this feature automatically plays the content stored in the device or runs the set app. When set to [On], [Auto], [Manual], [SuperSign Contents], and [SI App / Play via URL] items are activated.
  - [Auto]: When the automatic input switches due to taking screenshots of an image or video that is playing at regular intervals, this feature will play back the file. (OLED model is not supported.)
    -> Capture time Interval: The time interval can be set to 30 min, 1 hour, 2 hours and 3 hours.
  - [Manual]: When the automatic input switches due to the image and video file being uploaded, the feature will play back the file.
    -> [Backup media select]: Using the settings button, you can upload a single file in the internal / external memory.
    -> [Preview]: You can preview the uploaded file.
  - [SuperSign Contents]: When the automatic input switches, this feature will play the file(s) distributed in SuperSign CMS.
  - [SI App / Play via URL]: Run SI App or Play via URL when automatic input switch occurs.
    -> [SI App]: SI App behavior depends on the settings from [SI SERVER SETTING] menu in [Ez Setting].
    -> [Play via URL]: Play via URL behavior depends on the settings from [Play via URL] menu in [Ez Setting].
    -> If both [Play via URL] and [SI SERVER SETTING] can be run, it runs [Play via URL] when automatic input switch occurs.
- [reset]: Reset to initial settings.

[Status Mailing]

CSAB, CSAA, CSAC, CBAE, CBAF, CBAA

SETTINGS / ⚙ → [Ez Setting] → [Status Mailing]

This feature configures the system so that the status of the device is assessed and then notified to the administrator by e-mail.

- [On/Off]: Turns [Status Mailing] on or off.
- [Mailing Option], [Scheduling]: Sets the email sending interval.
- [User E-mail Address]: Set the user email address of the sender.
- [Sending Server(SMTP)]: Set the address of the SMTP server.
- [ID]: Enter the account ID of the sender.
- [Password]: Enter the password for the sender's account.
- [Receiver E-mail Address]: Set the email address of the recipient.
- [Send message]: Immediately assess the status of the device and deliver the information to the specified email address.
- [reset]: Reset to initial settings.

NOTE

- If the status regarding any of the following items changes or becomes abnormal, a status message can be sent.
  - 1. Temp. Sensor: If the set reaches a dangerous temperature, its current temperature is recorded, and an email containing such information is sent.
  - 2. Temp. Sensor Validation: An email is sent if there is no temperature sensor connected, if the communication status of the temperature sensor is unknown, or if the information provided by the chip provider is abnormal.
  - 3. LAN Status, WiFi Status: An email is sent when the network's connection status is changed. The maximum number of network status changes that can be saved is limited to 50. The saved value is reset once the power turns off.
  - 4. No Signal Check: Checks whether there is a signal. If there are no signals for more than 10 seconds, an email is sent.
  - 5. Schedule Play Status: An email is sent if content cannot be played between the scheduled start time and end time in either Content Management Schedule status or SuperSign Content status. However, this does not apply when terminated using the remote control.
  - 6. Fail Over Status: An email is sent if input switching occurred due to an error. (Excludes input switching initiated by the user (RC, RS232C, SuperSign))
  - 7. Motion Detection Status: When the product detects movement or shock caused by the external environment, an e-mail is sent to you.
- Only SMTP ports 25, 465, and 587 are supported.
- The occurrence of internal input switches, excluding external input switches (RC, RS232C, SuperSign), are considered as Fail Over Status.
- One email containing the “Failover status : Failover” message is sent when switching to Fail Over Status, and the following status emails sent regularly or upon status changes contain the message “Failover status : None”.

[Play via URL]

CSAB, CSAA, CSAC, CBAE, CBAF, CBAA

SETTINGS / ⚙ → [Ez Setting] → [Play via URL]

Play content you want to play automatically through the built-in web browser.

- [URL Loader]: Turns [Play via URL] on or off.
- [Set URL]: Enter the URL address to display automatically.
- [Preview]: Preview your desired website by accessing the specified URL.
- [Save]: Save the specified URL.
- [Reboot to Apply]: Restarts the monitor set after saving the specified URL.
- [Reset]: Reset to initial settings.

NOTE

- This feature does not apply when [Screen Rotation] is enabled, and using this feature disables [Preview].
- If [Time Setting] is not set to [Set Automatically], website navigation may be difficult.
  - **SETTINGS / ⚙** → Check [General] → [Time Setting]→ [Set Automatically]

[Setting Data Cloning]

CSAB, CSAA, CSAC, CBAE, CBAF, CBAA

SETTINGS / ⚙ → [Ez Setting] → [Settings Data Cloning]

This feature is used to copy and import the settings of the device to other devices.

- [Export Setting Data]: Export the settings of the device to another device.
- [Import Setting Data]: Import the settings of another device into the device.

[Sync Mode]

CSAB, CSAA, CSAC, CBAE, CBAF, CBAA

SETTINGS / ⚙ → [Ez Setting] → [Sync Mode]

Sync up time and content among multiple signage.

- [RS-232C Sync]: Sync up multiple signage connected by RS-232C.
- [Backlight Sync]: Shares values to control backlights using illumination sensors between devices connected by RS-232C.
- [Network contents sync]: Sync up multiple signage connected to the same network.

[LG ConnectedCare (Signage 365 Care)]

CSAB, CSAA, CSAC, CBAE, CBAF, CBAA

SETTINGS / ⚙ → [Ez Setting] → [LG ConnectedCare (Signage 365 Care)]

You can install the LG ConnectedCare (fault diagnosis) solution for fault diagnosis and prediction service.

- [Install]: Installs the LG ConnectedCare solution.
  1) [ENTER ACCOUNT NUMBER]: Enters the 6-digit account number to install the LG ConnectedCare solution.
  - Account Number: The number assigned when the LG ConnectedCare solution is registered. When the account number is entered, the account name corresponding to the number is obtained.

  2) [CONFIRM ACCOUNT NUMBER]: Displays the account number and the account name corresponding to the account number and validates the account number.
  - If the account number is registered, the account name corresponding to the account number is displayed, and you can continue to install the LG ConnectedCare solution.
  - If the account number is not registered, "Unknown" is displayed as the account name, and you cannot continue to install the solution.
- [Enable]/[Disable]: Sets whether to Enable/Disable the LG ConnectedCare solution.
- [Account]: Displays user's currently connected account number and name.
- [Version]: Displays the version of the LG ConnectedCare solution.
- [Check for Update]: Checks for available updates in the server.
- [Update]: Updates the LG ConnectedCare solution to the latest version.
- [Server Status]: Displays the status of connection between the set and server.
  - [Connected]: Displayed when the set and server are connected.
  - [Not Connected]: Displayed when the set and server are disconnected.
  - [Waiting for Approval]: Displayed when the server is waiting for approval.
  - [Rejected]: Displayed when the server rejected the connection.
- [Reset]: Deletes the installed LG ConnectedCare solution.

[Multi Screen]

CSAB, CSAA, CSAC, CBAE, CBAF, CBAA

SETTINGS / ⚙ → [Ez Setting] → [Multi Screen]

This feature allows you to view multiple external inputs and videos on a single screen.

PIP Mode	PBP Mode
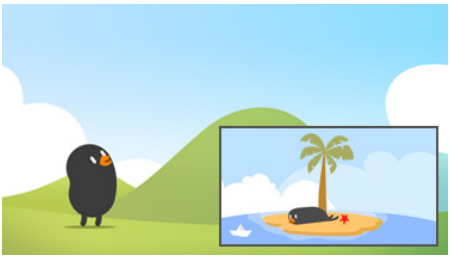	
3-Screen Split Mode	**4-Screen Split Mode**
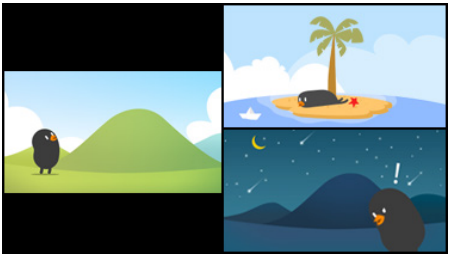	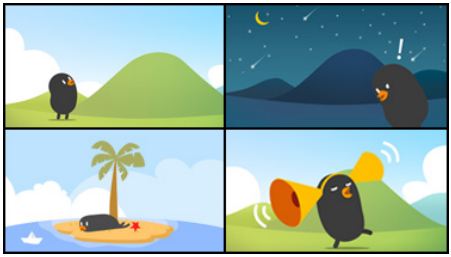

NOTE

- In multi-screen mode, the DP daisy chain feature is not supported.
- The number of split screens you can have may vary depending on the model.

Selecting Screen Layout

When you enter multi-screen mode without having set any screen layout, the screen layout selection menu appears. When the screen layout selection menu is not displayed on the screen, go to the screen layout menu bar by pressing the up arrow key on your remote control and select your desired screen layout. If you want to close the screen layout menu, press the back key.

Closing Screen Layout Menu

From the screen layout menu, press the up arrow key on the remote control to go to the screen layout menu bar and select it or press the back key to close the screen layout menu.

Changing Screen Input

Press the button on the top right of each split screen to select the desired input.

NOTE

- Inputs which have already been selected for other split screens cannot be selected again. To select them, press the RESET button to reset the inputs for all screens first.
- The PIP mode works only when External Input Rotation is set to Off and Screen Rotation is set to Off or 180.
- In the PIP mode, supported resolutions for subscreen are as follows: Other resolutions are not supported.
  - 1680 x 1050 / 1920 x 1080
- Interlaced formats are not supported. E.g. 1080i
- This applies to both External Input/Media.
- Models with 4-screen split mode support external input resolution of 3840 x 2160 on PIP Sub screens.

Playing Videos on Split Screens

Press the button on the upper right of each split screen, select Video File, and then select a storage device to view the list of videos in the selected device. Next, select your desired video from the list to play it.

NOTE

- Videos created with HEVC, MPEG-2, H.264, or VP9 codecs can be played on split screens. When using PIP mode, the following combinations cannot be used.

Main	Sub
HEVC	HEVC
H.264	HEVC
MPEG2	HEVC
VP9	VP9
H.264 4K	MPEG2
H.264 4K	VP9

- The limitations of 3 and 4-screen split are as below.

When Using 4K	It supports only up to 2 videos. A combination of max. 4K @ 60 fps + 2K @ 60 fps is available. However, H.264 4K supports max. 30 fps.	
When Using Only 2K	60fps	You can combine up to 1 MPEG2, 2 H.264, and 4 other codecs.
	30fps	You can combine up to 2 MPEG2 and 4 other codecs.

- Recommended Framerate: 24, 25, 30, 60 (including 23.9, 24.9, 29.9, 59.9)
  We do not guarantee performance when you play contents with other framerates.

[Office Meeting Mode]

SETTINGS / ⚙ → [Ez Setting] → [Office Meeting Mode]

You can set up Quick Functions to use the product in a conference room.

- Office Meeting Mode: Turning on this feature enables you to set functions related to the conference room meeting mode.
- Meeting Guide Screen
  - Meeting Guide Screen: Turning on this feature will allow you to use the conference information screen. This feature is for outputting a background image when there is no external input. Turning on this feature turns on the [No Signal Image] feature.
  - Meeting Room Name: When the conference information screen is on, you can change the conference room name displayed on the screen or select whether or not to display the conference room name.
  - Time: When the conference information screen is on, you can select whether or not to display the current time on the screen.
- Advanced Settings
  - Auto Bright: Turning on this feature will automatically adjust the monitor screen brightness to match the surrounding environment.
  - Picture Mode: Set the same picture mode for all external input supported by this product.
  - Input Auto Switching: When an external input has been inserted, this feature automatically switches to the relevant external input. Turning on this feature ends the [Ez Setting] → [Fail Over] feature.
  - Auto Power Off: Switch the power off automatically. When this feature is turned on, the [No Signal Power Off(15Min)] and [No IR Power Off (4hour)] features will be turned on.
  - Edit Input Name: Change the name of each external input.
  - Presentation Timer: Use the presentation timer. Turning on this feature will display the [Presentation Timer] on the screen for selecting an external input.
    -> **INPUT / ⇥** → [Presentation Timer]
    -> The time of operation can be set up to 120 minutes in intervals of ten minutes. When the time has been set, press [Start] to begin the timer.
    -> Press the yellow button on the remote control to pause the timer. When the timer is paused, the time is displayed in blue.
    -> Press the yellow button on the remote control to restart the timer.
    -> The time is displayed in red when the remaining time is less than three minutes. The time will blink when the remaining time is less than one minute.
    -> Press the blue button on the remote control to end the timer.
    -> The UI automatically disappears 10 minutes after the timer ends.
    -> The product may turn off while the timer is still in operation due to the auto-off and power saving settings.

NOTE

- If the No Signal image has been downloaded, turning on [Meeting Guide Screen] will display the downloaded image first when there is no signal.
- If using the [Meeting Room Name] and [Time] items in the [Meeting Guide Screen], and if using the downloaded image as the No Signal image, it is recommended to use a brightly-colored image in accordance with the optimal resolution of the Signage model.

General

[Language]

CSAB, CSAA, CSAC, CBAE, CBAF, CBAA

SETTINGS / ⚙ → [General] → [Language]

You can select the menu language to be displayed on the screen.

- [Menu Language]: Sets the language of your Signage monitor.
- [Keyboard Language]: Sets the language of the keyboard displayed on the screen.

[System Information]

CSAB, CSAA, CSAC, CBAE, CBAF, CBAA

SETTINGS / ⚙ → [General] → [System Information]

This feature displays information such as the device name, software version, and storage space.

[Set ID]

CSAB, CSAA, CSAC, CBAE, CBAF, CBAA

SETTINGS / ⚙ → [General] → [Set ID]

- [Set ID] (1-1000): Assigns a unique Set ID number to each product when several products are connected via RS-232C. Assign numbers ranging from 1 to 1000 and exit the option. You can control each product separately by using the Set ID you assigned to each product.
- [Auto Set ID]: Automatically assigns a unique Set ID number to each product when several products are connected for display.
- [Reset Set ID]: Reset the Set ID of the product to 1.

[Time & Date]

CSAB, CSAA, CSAC, CBAE, CBAF, CBAA

SETTINGS / ⚙ → [General] → [Time & Date]

This feature enables you to view and change the time and date on the device.

- [Set Automatically]: Set [Time] and [Date].
- [Daylight Saving Time]: Set the start and end times for Daylight Saving Time. The DST start/end times function only when you set them more than one day apart from each other.
- [NTP Server Setting]: Allows you to set other NTP servers other than the basic NTP server.
- [Time Zone]: Allows you to change the time zone based on continent, country/region, city or user settings.

[Power]

CSAB, CSAA, CSAC, CBAE, CBAF, CBAA

SETTINGS / ⚙ → [General] → [Power]

Power-related feature settings

[No Signal Power Off (15 Min)]

Set whether to use the 15 Min Auto Off feature.

- You can set this option to [On] or [Off].
- If you set this feature to [On], the product turns off after it's remained in No Signal status for 15 minutes.
- If you set this feature to [Off], the 15 Min Force Off feature is disabled.
- It is recommended that you set this feature to [Off] if you intend to use the product for long periods of time as the feature turns the power of the product off.

[No IR Power Off (4hour)]

Set whether to use 4 Hours Off feature.

- You can set this option to [On] or [Off].
- If you set this feature to [On] the product turns off if there is no input from the remote control for 4 hours.
- If you set this feature to [Off], the 4 Hours Off feature is disabled.
- It is recommended that you set this feature to [Off] if you intend to use the product for long periods of time as the feature turns the power of the product off.

[DPM] / [DPM (Standby Mode)]

Set the Display Power Management (DPM) mode.

- If this feature is not set to [Off], the monitor will enter DPM mode when there is no input signal.
- If you set this feature to [Off], [DPM] / [DPM (Standby Mode)] is disabled.

NOTE

- For some LED models, when [PM Mode] is set to [Power Off(Default)], the Energy Saving mode remains enabled even when there is an input signal.

[DPM Wake Up Control] / [DPM (Standby Mode) Wake Up Control]

Turns on the set according to the digital signal processing of the connected DVI-D/HDMI port.

- When set to [Clock], the set only checks for digital clock signals and turns on once it finds the clock signal.
- When set to [Clock+DATA], the set turns on if the digital clock and data signals are both input.

[PM Mode]

- [Power Off (Default)]: Set the normal DC off mode.
- [Sustain Aspect Ratio]: The PC retains the Extended Display Identification Data (EDID) even when the power is off.
- [Screen Off]: Switches to [Screen Off] status when entering DPM, Auto Power Off (15 min, 4 hours), or Abnormal Shut Down mode.
- [Screen Off Always]: Switches to [Screen Off] status when entering DPM, Auto Power Off (15 min, 4 hours), Off Time Scheduling, or Abnormal Shut Down mode, or when there is input from the remote control's Power button or the monitor's Off button.
- [Screen Off & Backlight On]: Partially turns on the backlight to keep the display at a proper temperature when in Screen Off status.
- [Network Ready]: Monitor is turned off, but you can control power internally through the network.

NOTE

- In order for the screen to switch from [Screen Off] to On status, there must be input from the remote control's Power or Input button, or the monitor's On button.

[Power On Delay](0-250)

- This feature prevents overload by implementing a power-on delay when multiple monitor sets turn on.
- You can set the delay interval in the range of 0 to 250 seconds.

[Power On Status]

- Select the operating status of the monitor when the main power has turned on.
- You can choose from among [PWR (Power On)], [STD (Standby)], [and LST (Last Status)].
- [PWR (Power On)] keep the monitor powered on when the main power has turned on.
- [STD (Standby)] switch the monitor to Standby status when the main power has turned on.
- [LST (Last Status)] switches the monitor back to its previous status.

[Wake On LAN] / [Wake On LAN (Networked Standby Mode)]

- Set whether to use [Wake On LAN] / [Wake On LAN (Networked Standby Mode)].
- You can set the feature to On or Off for each wired/wireless network.
- [Wired]: When set to [On], the [Wake On LAN] / [Wake On LAN (Networked Standby Mode)] feature is enabled, letting you turn the product on remotely through a wired network.
- [Wireless]: When set to [On], the [Wake On LAN] / [Wake On LAN (Networked Standby Mode)] feature is enabled, letting you turn the product on remotely through a wireless network.

[Power Indicator]

- This function enables you to change the [Power Indicator] settings.
- Setting to [On] will turn on [Power Indicator].
- Setting to [Off] will turn off [Power Indicator].
- Regardless of [On] or [Off] settings in [Power Indicator], [Power Indicator] will be turned on for approximately 15 seconds.

[Power On/Off History]

Display the device's power on/off history.

[Network]

CSAB, CSAA, CSAC, CBAE, CBAF, CBAA

SETTINGS / ⚙ → [General] → [Network]

[Wired Connection (Ethernet)]

- Wired Connection: Connects the monitor to a local area network (LAN) via the LAN port and configures wired network settings. Only wired network connections are supported. After setting up a physical connection, the display will automatically connect without any adjustments on most networks. A small number of networks may require the display settings to be adjusted. For detailed information, contact your Internet provider or consult your router manual.

- 802.1X EAP: Authentication based on IEEE 802.1X is available for wired connection. Select the desired EAP type and Phase 2 Authentication, enter the ID/Password registered with the authentication server, and press the CONNECT button to attempt the connection.

[Wi-Fi Connection]

If you have set your monitor up for a wireless network, you can view and connect to available wireless Internet networks.

- [Add a Hidden Wireless Network]: You can add a wireless network by manually typing in its name.
- [Connect via WPS PBC]: Press the button on the wireless router that supports PBC to easily connect to the router.
- [Connect via WPS PIN]: Enter the PIN number in the web page of the PIN-supporting wireless router to connect to the router in a simple manner.
- [Advanced Wi-Fi Settings]: When there is no available wireless network displayed on the screen, you can connect to the wireless network by entering the network information directly.

[Certificate Download]

- Download the certificates used for 802.1X EAP stored in USB.
- Only pem file extension can be downloaded.

NOTE

- On models that support Wi-Fi dongles, the Wireless Network Connection menu is enabled only when a Wi-Fi dongle is connected.
- When connected to a network that supports IPv6, you can select IPv4 / IPv6 in the wired / wireless network connection. But, IPv6 connection only supports automatic connection.

[LAN Daisy Chain]

- LAN Daisy Chain forms a daisy chain of LAN ports so that even if you connect only one monitor set to a network, the other sets in the daisy chain are connected to the network.
- However, the first monitor set in the daisy chain must be connected to the network through a port that is not used for the daisy chain connection.

[SoftAP]

If you set up a SoftAP, you can connect many devices via a Wi-Fi connection without a wireless router and use wireless Internet.

- The SoftAP and ScreenShare features cannot be used at the same time.
- On models that support Wi-Fi dongles, the SoftAP menu is enabled only when a Wi-Fi dongle is connected to the product.
- Wi-Fi Channel: You can directly select a Wi-Fi channel.
- SoftAp Access Information
  - SSID: A unique identifier necessary to make a wireless Internet connection
  - Security Key: Security key: The security key you enter to connect to the desired wireless network
  - Connected Devices Count: Number of connected devices: Shows the number of devices currently connected to your Signage device via a Wi-Fi connection. Up to 10 devices are supported.

[UPnP]

Open and block UDP port 1900, which is used for UPnP.

- The default setting is [On]. Setting this feature to [Off] blocks UDP port 1900, making the UPnP function unavailable.
- If you set this feature to [Off], Sync Mode's "Network" option will be deactivated. When the value for Sync Mode is "Network," the value switches to "Off," deactivating the "Network" option.
- If you change the UPnP value, the change will not be applied before a [reboot].
- If you set UPnP to [Off], you cannot use Group Manager 2.0 properly.

[Ping Test]

Check your network status with the ping test.

[Port Control]

Unused ports can be blocked for network security.

[Connection Domain]

Change domain for checking network connection.

NOTE

- A reboot is recommended for the settings to be applied properly.

Tips for Network Settings

- Use a standard LAN cable (Cat5 or higher with an RJ45 connector) with this display.
- Many network connection problems during set up can often be fixed by re-setting the router or modem. After connecting the display to the home network, quickly power off and/or disconnect the power cable of the home network router or cable modem, Then power on and/or connect the power cable again.
- Depending on the Internet service provider (ISP), the number of devices that can receive INTERNET service may be limited by the applicable terms of service. For details, contact your ISP.
- LG is not responsible for any malfunction of the display or Internet connection failures due to communication errors/ malfunctions associated with your Internet connection or other connected equipment.
- LG is not responsible for problems within your INTERNET connection.
- You may experience undesired results if the network connection speed does not meet the requirements of the content being accessed.
- Some INTERNET connection operations may not be possible due to certain restrictions set by the Internet service provider (ISP) supplying your Internet connection.
- Any fees charged by an ISP including, without limitation, connection charges are your responsibility.

NOTE

- If you want to access the Internet directly on your display, the INTERNET connection should always be on.
- If you cannot access the Internet, check the network conditions from a PC on your network.
- When you use Network Setting, check the LAN cable or check if DHCP in the router is turned on.
- If you do not complete the network settings, the network may not function correctly.

CAUTION

- Do not connect a modular phone cable to the LAN port.
- Since there are various connection methods, please follow the specifications of your telecommunication carrier or INTERNET service provider.
- Network setting menu will not be available until the display connected to physical network.

Tips for When Configuring Wireless Network Settings

- The wireless network may be affected by interference from a device that uses 2.4 GHz frequency, such as a wireless telephone, Bluetooth device or microwave. Interference may also be caused by a device that uses 5 GHz frequency such as Wi-Fi devices.
- The wireless network service may run slowly depending on the surrounding wireless environment.
- Some devices may have a network traffic jam if any local home networks are turned on.
- To connect to a wireless router, a router that supports wireless connection is necessary; the wireless connection function of the corresponding router must also be activated. Ask the router manufacturer whether the router supports wireless connection.
- To connect to a wireless router, verify the SSID and security settings of the wireless router. Please refer to the user guide of the corresponding router regarding SSID and security settings of the wireless router.
- The monitor may not work properly if network devices (wired/wireless router or hub, etc.) are incorrectly set up. Be sure to install the devices correctly by referring to their user guides before configuring the network connection.
- The connection method may vary according to the manufacturer of the wireless router.

[Advanced Setting]

CSAB, CSAA, CSAC, CBAE, CBAF, CBAA

SETTINGS / ⚙ → [General] → [Advanced Setting]

[Beacon]

- This option enables BLE Beacon, one of Bluetooth 4.0's features.
- Beacon Mode (On/Off Toggle): enables the Beacon feature.
- The LG Beacon/iBeacon/Eddystone Type Beacon features are supported.
- iBeacon
  - Beacon UUID (hex): Set the UUID.
    1. Field1: 4byte hex value (8 digits)
    2. Field2: 2byte hex value (4 digits)
    3. Field3: 2byte hex value (4 digits)
    4. Field4: 2byte hex value (4 digits)
    5. Field5: 6byte hex value (12 digits)
  - Major (0–65535): Sets the Major value.
  - Minor (0–65535): Sets the Minor value.
- Eddystone
  - Frame: Frame: Set UUID or URL.
- 1. Setting the URL method
  - Beacon UUID (hex): Set the UUID.
    1 - Field1: 10byte hex value (20 digits)
    2 - Field2: 6byte hex value (12 digits)
- 2. Setting the URL method
  - URL Prefix: URL Prefix: Sets the prefix of the URL.
  - URL Suffix: URL Suffix: Set the suffix of the URL.
  - URL: Enter the part of the URL that excludes the prefix and suffix.
  - URL string length is limited to 15 characters.
- [Check] button: The button used to complete and apply the Beacon settings.

NOTE

- Some models do not support background screening services in iOS.
- A reboot is recommended for the settings to be applied properly.
- The UUID value is hexadecimal and the exact number of digits must be entered.
- The distance to Beacon may vary depending on the device.
- The distance to Beacon may vary depending on the application used in the device.
- The Beacon function is affected by radio waves because it employs the Bluetooth Low Energy (BLE) technology. It may not function properly if the frequency range is not around 2.4GHz.
- When you set iBeacon, LG Beacon will be set to be the same as the value of iBeacon field. But the LG Beacon setting item won't be provided separately.

[Control Interface]

Devices connected to the display can be controlled via the interface.

- [PC/OPS Power Control]: Enable you to control the power of PC or OPS as you turn the display on and off.
  - [Disable]: Disable [PC/OPS Power Control].
  - [Sync(On)]: Set the PC/OPS power to be turned on when the display is turned on.
  - [Sync(On/Off)]: Set the PC/OPS power to be turned on when the display is turned on and set the PC/OPS power to be turned off when the display is turned off.
- [Control Interface Selection]: Select the serial communication path between the display and the connected devices.
  - [Display]: Serial communication is available via a display RS-232C IN terminal.
  - [OPS]: Serial communication is available with the OPS installed in the display.

NOTE

- Depending on the model, it can be displayed as [PC/OPS Control].
- Depending on the supported interface, the sub-menu of [Control Interface Selection] may be different.
- The PC products that support the power control are MP500/MP700, and you have to purchase them separately if necessary.
- If you change [Control Interface Selection], the [RS232C SYNC] feature of [Sync Mode] may be restricted.

[Background Image]

This feature enables you to set the default background image.

- [Booting Logo Image]: Change the logo image that appears when the device boots up. If you set this option to Off, no logo image appears when the device boots up. Download or initialize an image file on the storage device.
- [No Signal Image]: Change the image that appears when there is no signal. If you set this option to Off, no image appears when there is no signal. Download or initialize an image file on the storage device.

NOTE

- To download an image, an image file must exist in a folder named “LG_MONITOR” or “lg_monitor” in the external memory (USB).
- Supported image file formats : “BMP”, “JPG”

[Input Manager]

You can set the PC or DTV label for each external input.

NOTE

- SDI Inputs are not supported.

[SIMPLINK Setup]

- When the [SIMPLINK Setup] is set to [On], you can use the SIMPLINK provided by LG Signage.
- [Device ID]: Set the ID of the device connected via CEC wiring. You can choose a value between [All] and [E].
- [Standby]: Sets the scenarios for sending and receiving the OpStandBy (0x0c) command. Detailed scenarios are as follows:

	Transmission	Reception
All	O	O
Send Only	O	X
Receive Only	X	O

[Crestron]

(Depending on model)

[Crestron Connected] V1

- This function enables synchronization with applications provided by Crestron.
- [Server]: This menu sets the server's IP address for the network connection with the server (equipment provided by Crestron).
- [Port] (1024~65535): This menu sets the port for the network connection with the server. The default port number is 41794.
- [IP ID] (3-254): This menu sets a unique ID for synchronizing with the application.

[Crestron Connected] V2

- The connection status of the server type shall be indicated by pictures and phrases. (Disconnected, Connecting, Connected)
- [Type]: You can select the server type you want to connect to (Off, Control System, Virtual Control, Fusion)
- [CONNECT]: If you press the button once, a set tries to connect to the server and the button phrase is changed into [DISCONNECT]. In this case, the upper items are immutable. To disconnect and change upper items, pressing the button again is needed.
- Information for connecting with the server
  - [Type]: Control System
    - [Server]: Enter the IP information of the server
    - [Port]: Enter the Port information for the server
    - [IP ID]: A unique ID that distinguishes crestron equipment from server
  - [Type]: Virtual Control
    - [Room ID]: A unique ID that distinguishes room from server. If the [IP ID] is the same, but the [Room ID] is different, the server recognizes it as a different Crestron equipment.
    - [Server], [Port], [IP ID] are the same as Control System's.
  - [Type]: Fusion
    - [Method]: Connection direction can be selected. ([Device to Fusion], [Fusion to Device])
      - [Device to Fusion]: How to connect from set to server
        - [URL]: Server URL
        - [Port]: Server Port
      - [Fusion to Device] : How to connect from server to set

- [Auto Discovery]: The ability to locate other Crestron equipment in the network
- [SSL]: Communication security with server can be established. The following items are meaningful only at [SSL] on
  - [User], [Password]: When the [Authentication] function is turned on on the server, [User] and [Password] must be entered to connect with the server.
  - [Verify Certificate]: A feature that checks whether a certificate installed on a server is valid. If it is not valid, it does not connect to the server
  - [Certificate Download]: The certificate must be stored in the set to perform the [Verify Certificate] function. Only certificates with extensions .pem, .crt in the USB root directory are recognized and can be added or deleted through the menu. All certificates stored at the time of [Factory Reset] are deleted.

[XiO Cloud]

- The connection status with [XiO Cloud] is displayed. (Disconnected, Connecting, Connected)
- [CONNECT]: If you press the button once, a set tries to connect to the server and the button phrase is changed into [DISCONNECT]. To disconnect, pressing the button again is needed.

[LED Controller]

- Allows a specific LED display manufacturer to remotely control some features of the linked display.

[Quiet Mode]

This mode is used to reduce the noise of the fan.

Adjusted to the set fan control and brightness.

[LG promota]

This feature allows connection of promota app on mobile device.

For more information on how to use it, please visit the promota website (*https://www.promota.net/*)

Autorun promota App function automatically runs promota after booting.

Display

[Picture Mode]

CSAB, CSAA, CSAC, CBAE, CBAF, CBAA

SETTINGS / ⚙ → [Display] → [Picture Mode]

[Mode]

This feature enables you to choose the optimal picture mode for your installation environment.

- [Mall/QSR], [Transportation], [Education], [Gov./Corp.]: Display the picture optimally for your installation environment.
- [General]: Display the picture at normal contrast, brightness, and sharpness.
- [Auto Power Save]: Adjust the screen brightness to reduce power consumption.
- [Expert], [Calibration]: Allow an expert, or anyone who loves picture quality, to manually tune to the best picture quality.
- [Hospital]: An image setting mode optimized for medical images.

For some LED models, select an image mode as follows:

- [Shopping Mall], [Airport & Station], [Office & School], [Control Room]: displays the mode optimized for the installing environment.
- [Calibration]: Allow an expert, or anyone who loves picture quality, to manually tune to the best picture quality.

NOTE

- The type of [Picture Mode] you can select may vary depending on the model or input signal.
- [Expert] is an option that allows a picture quality expert to fine-tune the picture quality using a specific image. Thus, it may not be effective for a normal picture.

[HDR]

This feature enables you to choose the optimal picture mode for your installation environment.

- [Mall/QSR]: sharpens the image by increasing the contrast, brightness and sharpness.
- [General]: In a normal viewing environment, it opens a screen that can properly show the expressiveness and brightness of HDR.
- [Gov./Corp.]: The screen appears brighter and clearer than of the General screen.
- [Education]: Suitable picture for education.

For some LED models, select an image mode as follows:

- [Shopping Mall], [Airport & Station], [Office & School], [Control Room]: displays the mode optimized for the installing environment.

[Customize]

- [Backlight]: Adjust the brightness of the screen by adjusting the brightness of the backlight. The closer the value is to 100, the brighter the screen is.
- [OLED Light]: Adjusts the brightness of the LED panel to control the brightness of the screen.
- [LED Light]: Adjust screen brightness by tuning the LED Light. Higher values increase brightness.
- [Contrast]: Adjust the difference between the light and dark areas of the picture. The closer the value is to 100, the greater the difference is.
- [Brightness]: Adjust the overall brightness of the screen. The closer the value is to 100, the brighter the screen is.
- [Sharpness]: Adjust the sharpness of the edges of objects. The closer the value is to 50, the clearer and the sharper the edge becomes.
- [Color]: Soften or deepen the tints on the screen. The closer the value is to 100, the deeper the colors become.
- [Tint]: Adjust the balance between red and green levels displayed on the screen. The closer to Red 50, the redder the color will be. The closer to Green 50, the greener the color will be.
- [Color Temperature]: The higher you set the color temperature, the cooler the colors on the screen will feel. The lower you set the color temperature, the warmer the colors on the screen will feel.
- [Expert Controls]: Customize the advanced options.
  - [Dynamic Contrast]: Optimize the difference between the light and dark parts of the screen according to the brightness of the image.
  - [Super Resolution]: Sharpen the areas of the screen that are blurry or barely distinguishable.
  - [Color Gamut]: Select the range of colors available.
  - [Dynamic Color]: Adjust the tint and saturation of the image for a more vivid and lively display.
  - [Color Filter]: Accurately adjust color and tint by filtering a specific color area of RGB space.
  - [Preferred Color]: Adjust the skin tint, grass tint, and sky tint to your preference.
  - [Gamma]: Adjust gamma settings to compensate for the brightness of the input signal.
  - [White Balance]: Adjust the overall color fidelity of the screen to your liking. In Expert mode, you can fine-tune the picture using the Method/Pattern options.
  - [Color Management System]: Experts use the color management system when they adjust the colors by using the test pattern. The color management system allows you to make an adjustment by selecting from among 6 different color spaces (Red/Yellow/Blue/Cyan/Magenta/Green) without affecting other colors. In a normal picture, you may not notice the color changes you have made.
  - [Dynamic tone mapping]: Suitable contrast settings based on image brightness of the HDR content.

- [Picture Option]: Customize the picture options.
  - [Noise Reduction]: Remove randomly popping dots to make the picture look clearer.
  - [MPEG Noise Reduction]: Reduce the noise generated in the process of creating a digital video signal.
  - [Black Level]: Adjust the brightness and contrast of the screen by adjusting the black level of the screen. (Recommended settings based on input signals: RGB 0 - 255: High, RGB 16 - 235: Low, YCbCr: Low)
  - [Real Cinema]: Optimize the video image for a cinematic look.
  - [Motion Eye Care]: Reduce eye fatigue by adjusting brightness levels and lessening blurriness based on the displayed image.
  - [LED Local Dimming]: Make the light areas of the screen lighter and the dark areas darker for maximum contrast. Setting this feature to Off may increase the monitor's power consumption.
  - [TruMotion]: Reduce image shaking and image sticking that can occur with /moving images. (If you set the [External Input Rotation], this feature is unavailable.)
  - [CamSync(V-Sync)]: Control output frame for the installing environment (for some LED models)
- [Apply to all inputs]: Copies the current value of the detailed setting menu to the entire input, and applies only to the selected picture mode.
- [Reset]: Reset the picture settings. Because the picture settings are reset according to the monitor's picture mode, please select the picture mode before resetting the picture settings.

[Aspect Ratio]

CSAB, CSAA, CSAC, CBAE, CBAF, CBAA

SETTINGS / ⚙ → [Display] → [Aspect Ratio]

This feature enables you to change the picture size to view the picture at its optimal resolution.

- [Full]: Stretch the picture to fill the screen.
- [Original]: Display the picture at its original resolution.

[Advanced Setting]

CSAB, CSAA, CSAC, CBAE, CBAF, CBAA

SETTINGS / ⚙ → [Display] → [Advanced Setting]

[UHD Deep Color]

If you connect an HDMI, DP, or OPS device to one of the Deep Color adjustable ports, you can select between UHD Deep Color On (6G) or Off (3G) in the UHD Deep Color settings menu.

If a compatibility issue occurs with a graphics card when the Deep Color option is set to On at 3840 x 2160 @ 60 Hz, set the Deep Color option back to Off.

- HDMI, DP, and OPS specifications may vary depending on the input port. Check the specifications of each device before connecting.
- HDMI input port 1, 2 is best suited for high definition videos that are 4K@60 Hz (4:4:4, 4:2:2). However, video or audio may not be supported depending on the specifications of the external device. If this is the case, please connect the device to a different HDMI port.
- This feature may not be available on some models.

[Energy Saving]

- [Smart Energy Saving]: Automatically adjust the brightness of the screen according to the brightness of the picture to save energy.
  - [On]: Enable the Smart Energy Saving feature.
  - [Off]: Disable the Smart Energy Saving feature.
- [Brightness Control]: Adjust the brightness of the screen to save energy.
  - [Auto:] Automatically adjust the brightness of the screen according to ambient light.
  - [Off]: Disable energy saving.
  - Minimum/Medium/Maximum: Use energy saving according to the energy saving level set for the monitor.
- [Brightness Range Adjustment]: Sets the min/max values of the brightness range for the backlights adjusted by the illumination sensors.
  - [Min Backlight]: Sets the min value of the backlights.
  - [Max Backlight]: Sets the max value of the backlights.
- [Brightness Scheduling]: Adjust the backlight at specified times.
  - You can set this feature to [On/Off].
  - Add schedule by setting the schedule time and backlight/OLED Light/LED Light value.
  - If the current time has not been set, [Brightness Scheduling] is disabled.
  - You can add up to six schedules, and they are sorted in ascending order by time.
  - You can edit a schedule by selecting it from the list and pressing the [OK] button.

NOTE

- Return to default settings by clicking [Admin] > [Factory Reset].

[Adjustment (RGB-PC)]

Set PC display options in RGB mode.

- Intelligent Auto : Select Enable auto-tuning for the first recognized resolution of the RGB input.
- [Set Automatically]: Sets the screen position, clock, and topology to be automatically adjusted. The image may display unstable for a few seconds while the configuration is in progress.
- [Resolution]: Choose from 1024 x 768, 1280 x 768, 1360 x 768 resolutions.
- [Position]/[Size]/[Phase]: Adjust the option if the image is not clear after automatic configuration, especially if the letter is shaken.
- [Reset]: Returns the option to its default settings.

[HDMI IT Content]

Set the HDMI IT Contents function.

- [Off]: Disable the HDMI IT Contents function.
- [On]: Enable the HDMI IT Contents function.
  This feature automatically changes the monitor's picture mode based on HDMI Contents information when an HDMI signal is entered.
  Even if the monitor's picture mode has been changed by the HDMI IT Contents feature, you can change the picture mode again manually.
  As this has a higher priority than the picture mode set by the user, the existing picture mode may be changed when the HDMI signal changes.

[Color Calibration]

Sets the screen color to match the actual color temperature.

- [Off]: Disables the Color Calibration feature. The screen color is set to the default value.
- [On]: Enables the Color Calibration feature. The screen color is set to match the actual color temperature.

NOTE

- The screen color may change if you enable or disable the feature.
- If the Picture Mode is 'Calibration', this feature will not be available.

[LED Local Dimming]

Make the light areas of the screen lighter and the dark areas darker for maximum contrast.

NOTE

- Return to default settings by clicking [Admin] > [Factory Reset].

[Average Picture Level Auto Control]

Can use image quality control based on APL (Average Picture Level) of the monitor input image. When using the monitor as a Video Wall, it is recommended to set this function off to prevent an image quality difference between the monitors.

NOTE

- Return to default settings by clicking [Admin] > [Factory Reset].

[Low Latency]

Sets whether to use dithering processing.

- [Off]: Use dithering processing.
- [On]: Do not use dithering processing. Since frame delay does not occur due to dithering processing, it is recommended to be used when delay is sensitive.

[Dynamic Brightness]

Set whether to use the peak luminance that can produce the maximum brightness in a local area.

- [Off]: Do not use peak luminance. The brightness that can be expressed at the maximum decreases and the ability to express low gradations improves.
- [On]: Use peak luminance. The brightness that can be expressed to the maximum increases, and the expressive power of low gradation deteriorates.

[Genlock]

When the Genlock signal is connected to the REF IN port and the Genlock feature is turned on, the monitor can use the video signal synchronisation feature.

- [Off] : Genlock is disabled
- [On] : Genlock is enabled

NOTE

- Genlock setting of video source equipment is more important than Genlock of LED System Controller.

[Phase Shift]

Phase Shift can make adjustment of LED screen output timming.

LED screen can adjust timing manually to remove visual artefacts with Phase Shift, if camera recoding result make double image(double frame).

- Range : 0~360 (0: Don't use Phase Shift, 180: 0.5 Frame delay added)

NOTE

- Camera sync shift is more good to control visiual atrefacts than LED screen. (ex: ARRI camera's Sync Shift)

Camera capture image has double frame image

Camera capture image has single frame image
: Phase Shift can fine control

[SDI Color Format]

Sets the pixel encoding value, which is part of the SDI Packet AVI Infoframe.

- [Auto]: Sets to the pixel encoding value received from the device.
- [RGB444]: Sets the pixel encoding value to RGB444.
- [YCbCr444]: Sets the pixel encoding value to YCbCr444.
- [YCbCr422]: Sets the pixel encoding value to YCbCr422.

NOTE

- This feature works in SDI.

[Frequency Spread]

Spreads the noise generated by electronic devices.

- [Off]: Scan-line effect is removed when shooting with the camera.
- [On]: Minimizes the impact on the human body and peripheral devices by lowering electromagnetic waves.

[Waveform]

View the luminance information of the current input picture as a waveform.

[Vectorscope]

View the saturation components of the current input picture through a vectorscope.

Sound

[Sound Mode]

SETTINGS / ⚙ → [Sound] → [Sound Mode]

[Sound Mode]

The best sound quality will be selected automatically depending on the video type currently being watched.

- [Standard]: This sound mode works well for content of all types.
- [Cinema]: Optimize sound for watching movies.
- [Clear Voice III] Enhance voices so they can be heard more clearly.
- [Sports]: Optimize sound for watching sports.
- [Music]: Optimize sound for listening to music.
- [Game]: Optimize sound for playing video games.

[Balance]

- [Balance]: Adjust the output volume for the left speaker and the right speaker.

[Equalizer]

- [Equalizer]: Manually adjust sound by using the equalizer.

[Reset]

- [Reset]: Resets sound settings.

[Sound Out]

CSAB, CSAA, CSAC

SETTINGS / ⚙ → [Sound] → [Sound Out]

- [Internal Speaker] / [External Speaker]: You can output audio either through your Signage monitor's internal speaker or through an external speaker connected to it.
  - [Use Speaker Sound]: Enables you to turn the speaker on and off. If you are using an external audio device, turning off this feature allows you to play sound through the external audio device only.
- [SIMPLINK External Speaker]: This function connects Home Theater device by SIMPLINK. When it is set to Home Theater device input, it outputs voice through the connected device. This option is activated when SIMPLINK has been set to On.
- [LG Sound Sync / Bluetooth]: Enables you to connect Bluetooth audio devices or Bluetooth headsets wirelessly to Sigange monitor so that you can enjoy richer audio conveniently.
- [Optical]: applied only to the models with digital optical sound output ports. You can output audio through external speaker audio devices connected to the digital audio output port.
- [Digital Sound Out]: allows you to change settings for digital audio output.

	Audio Input	Digital Audio Output
Auto	Dolby Digital Plus	Dolby Digital
	Dolby Digital	Dolby Digital
	AAC (Media)	Dolby Digital
	AAC	Dolby Digital
	HE-AAC	Dolby Digital
	DTS-HD, DTS-Express, DTS	DTS
	MPEG	PCM
PCM	All	PCM

NOTE

- Some recently connected devices may automatically attempt to reconnect to the Signage monitor when it is turned on.
- It is recommended that you set LG audio devices that support LG Sound Sync to LG TV mode or LG Sound Sync mode before connecting.
- Press Device Selection to view the devices that are or that can be connected and connect other devices.
- You can use the signage remote control to adjust the volume of the connected device.
- If the audio device fails to connect, check that it is switched on and available for connection.
- Depending on the type of the Bluetooth device, the device may not connect correctly or an abnormal behavior may occur such as unsynchronized video and audio.
- Sound may stutter or sound quality may be reduced if:
  - The Bluetooth device is too far from the Signage monitor.
  - There is an obstructing object between the Bluetooth device and the Signage monitor.
  - The Bluetooth device is used together with radio equipment such as a microwave oven or wireless LAN.

[Audio Out]

SETTINGS / ⚙ → [Sound] → [Audio Out]

- [Off]: Disables the use of [Audio Out]. (No audio outputted.)
- [Variable]: You can specify an output range for the external audio device connected to the monitor and adjust the volume within the range. You can change the volume of an external audio device within the range of 0 to 100 (the same as the Signage speaker volume). However, there may be a difference in the actual volume level outputted.
- [Fixed]: Sets a fixed audio output level for the external audio device.
  - If there is no external input, no external audio is outputted.
  - The variable audio output level 100 is the same as the fixed audio output level.

[AV Sync Adjustment]

CSAB, CSAA, CSAC

SETTINGS / ⚙ → [Sound] → [AV Sync Adjustment]

This feature adjusts audio timing to synchronize video and audio.

- [External Speaker] (0~15): Adjust the sync between video and audio coming from external speakers, such as those connected to the digital audio output port, LG audio equipment, or headphones. The larger the number is, the slower the voice output is than the default value.
- [Internal Speaker] (0~15): Adjust the sync of sound from the internal speakers. The larger the number is, the slower the voice output is than the default value.
- [Optical] (0~15): Adjusts sync for the sound from digital optical audio output. A greater number means slower audio output compared to the default.
- [Bypass]: Output the broadcast signals or the sound from external devices without any audio delay. Audio may be outputted earlier than video due to the processing time for video that is inputted into the monitor.

[Digital Audio Input]

SETTINGS / ⚙ → [Sound] → [Digital Audio Input]

This feature enables you to choose an input source for audio output.

- [Digital]: Output the audio contained in the digital signal inputted from the connected digital input source (HDMI, DISPLAYPORT, OPS).
- [Analog]: Output audio from the digital input source (HDMI, DISPLAYPORT, OPS) connected to the monitor through the Audio In port.

Admin

[Lock Mode]

CSAB, CSAA, CSAC, CBAE, CBAF, CBAA

SETTINGS / ⚙ → [Admin] → [Lock Mode]

[Home Dashboard Lock]

When you set the Home Dashboard Lock, you can limit the change in the settings of the Home Dashboard.

[USB Lock]

This feature enables you to configure the USB lock feature so that settings or content cannot be changed.

[OSD Lock]

This feature enables you to configure the OSD lock feature so that settings or content cannot be changed.

- Press and hold the Settings key for at least 10 seconds and enter password to access the settings menu in OSD Lock.

[IR Operation Lock]

- If you set this feature to [Off (Normal)], you can use your remote control.
- If you set this feature to [On (Power Key Only)], you can only use the power key.
- If you set this feature to [On (Block All)], you cannot use your remote control. (However, Power On feature is available.)
- Press and hold the Settings key for at least 10 seconds and enter password to access the settings menu in IR Operation Lock.

[Local Key Lock]

This feature enables you to configure the Local Key Operation Lock feature so that settings or content cannot be changed.

- If you set this feature to [Off (Normal)], you can use the local keys on the monitor.
- If you set this feature to [On (Power Key Only)], you can only use the power key. (When you use a joystick, press and hold a local key to turn on/off the monitor.)
- If you set this feature to [On (Block All)], you cannot use the local keys. (However, Power On feature is available.)

[Wi-Fi Lock]

This feature enables you to turn the Wi-Fi feature on or off.

[Screen Share Lock]

- On: This feature enables you to turn the Screen Share feature off.
- Off: This feature enables you to turn the Screen Share feature on.
- Off (PIN): This feature enables you to use the Screen Share feature using PIN number.

If the Screen Share Lock value is changed, the function is not applied without a reboot.

[Change Password]

CSAB, CSAA, CSAC, CBAE, CBAF, CBAA

This feature enables you to set the password you use to enter the Installation menu. (The default password: 000000)

1 Enter your current password.
2 Enter a new 6-digit password.
3 Enter the same password again in the Confirm Password field for confirmation.

[Enterprise Settings]

CSAB, CSAA, CSAC, CBAE, CBAF, CBAA

- Enter your company account code to apply the corresponding enterprise settings.
- When your code has been entered, the monitor set gets reset, thereby applying the corresponding enterprise settings.
- This feature does not get activated if a code has already been entered.

[Factory Reset]

CSAB, CSAA, CSAC, CBAE, CBAF, CBAA

Initializes all settings in [Setting] and files from the internal storage.

The exceptions are RGB gain value of [Calibration] mode, [Video Wall]([Tile Mode], [Tile Mode Setting], [Natural Mode], [Frame Control], [Scan Inversion]) and [Server Setting] items of [Ez Setting], and [Set ID] items of [General].

NOTE

- It keeps the existing settings because the Off / On button in the User menu only affects the active / inactive status of the submenu.

CONTENT MANAGER

Web Login

- Different features are supported depending on the product.

This Signage product comes with a feature that enables you to access it on your PC or mobile device.

- Content Manager, Group Manager 2.0, Control Manager, Log Out, Change Password menus are provided.
- URL: https://set ip:3777
- You can check the initial password in **HOME /** -> [Mobile URL] menu.

CAUTION

- Supported resolutions (this program is optimized for the following resolutions):
  - PC: 1920 x 1080 / 1280 x 1024
  - Mobile: 360 x 640(1440 x 2560, 1080 x 1920), DPR
- Supported browsers (this program is optimized for the following browsers):
  - Chrome 56 or later (recommended)
- For security, please Login with the initial password and change the password.
- After the initial password has been changed, the password is not displayed in the **HOME /** -> [Mobile URL] menu.

Content Manager

CSAB, CSAA, CSAC, CBAE, CBAF, CBAA

[Player]

HOME / → (Player)

The Content Manager app's player feature enables you to play/manage contents of video, image, template, SuperSign and playlist in an integrated way. (The OLED models do not support the playback and management of image content and template content.)

[Continuous Play]

1. Select your desired type of content from the tab on the left and then select your desired content.
2. Click [Play] in the upper right-hand corner of the screen and enjoy the content you have selected.

[Export]

1. Select your desired type of content from the tab on the left and click [Export] in the upper right-hand corner of the screen.
2. Select the content you wish to export.
3. Click [Copy]/[Move] in the upper right-hand corner of the screen and select the device to which you wish to export the content. (If a content file stored on the target device has been selected, the processing of the content file is skipped.)
4. You can see that the content has been moved/copied to the device.

[Delete]

1 Select your desired type of content from the tab on the left and click [Delete] in the upper right-hand corner of the screen.
2 Select the content you wish to delete.
3 Click [Delete] in the upper right-hand corner of the screen.
4 You can see that the content has been deleted.

[Filter / Sort]

1 Click [Filter / Sort] in the upper right-hand corner of the screen.
2 1) Choose your desired sort criterion to sort content files either by file name or in the order they have been recently played.
2) It is possible to only view the content stored on your desired device by filtering content files by device.
3) It is possible to only view the content of your desired type by filtering content files by content type.

[Create Playlist]

When creating a playlist, you cannot include characters that cannot be used in file names on Windows — such as \, /,:, *,?, ", <,>, and | — in the names of the files in the playlist. In addition, if the playlist contains content files whose names include such characters, you cannot move or copy the playlist.

1 Select the [Playlist] tap from the tab on the left and click [Create Playlist] in the upper right-hand of the screen.
2 Select the content you wish to add to the playlist and click [NEXT] in the upper right-hand of the screen.
3 Set a play time for each piece of content (applicable only for photo and template content), as well as other items such as Conversion Effect, Ratio, and Auto Playback, and then click [DONE] button in the upper right-hand corner of the screen.
4 You can see a new [Playlist] has been created.

[Distribution]

1 Click [Distribute] in the upper right-hand corner of the screen.
2 Go to the Group Manager app to distribute the created playlists.

NOTE

- The Distribute button shows only when playlist is selected as media type.

[Scheduler]

HOME / ⌂ → (Scheduler)

The Content Manager app's scheduler feature enables certain content to be played at a scheduled time through a playlist or external input.

[Creating a Schedule]

1 Click [New Schedule] in the upper right-hand corner of the screen.
2 Choose between [Playlist] and [Input Source].
3 1) If you have selected [Playlist], select the playlist you wish to schedule the playback of.
2) If you have selected [Input Source], select the external input source you wish to schedule the playback of.
4 Enter schedule information and create a new schedule. (When creating a schedule, you cannot include characters that cannot be used in file names on Windows — such as \, /,:, *,?, ", <,>, and | — in the name of the schedule file. In addition, if the playlist linked to the schedule contains content files whose names include such characters, you cannot move or copy the playlist.)
5 Watch the playlist or external input you selected play back at its scheduled time.

[Importing a Schedule]

1 Click [Import] in the upper right-hand corner of the screen.
2 Select the external storage device from which you wish to import a schedule.
3 Select the schedule you wish to import to your monitor. (You can only choose a single schedule.)
4 Click [Select] in the upper right-hand corner of the screen.
5 Check that the schedule has been imported to the monitor's internal storage memory.

[Exporting a Schedule]

1 Click [Export] in the upper right-hand corner of the screen.
2 Select the external storage device to which you wish to export a schedule.
3 Select the schedule you wish to export from your monitor. (You can choose multiple schedules.)
4 Click [Select] in the upper right-hand corner of the screen.
5 Check that the schedule has been exported to the external storage device you selected.

[Delete Schedule]

1 Click [DELETE] in the upper right-hand corner of the screen.
2 Select the schedules you wish to delete.
3 Click [DELETE].
4 Check that the schedules have been deleted.

[Calendar View]

1 When you have registered schedules, click [Calendar View].
2 You can see that the schedules registered are displayed in the form of a timetable.

[Distribute]

1 Click [Distribute] in the upper right-hand corner of the screen.
2 Go to the Group Manager app to distribute the created schedules.

NOTE

- If the schedule creation time overlaps, the previously created schedule is deleted.
- When a schedule that has not been set repeatedly is completed, the schedule is automatically deleted.
- Schedule does not work while Scheduling list app is running.

[Editor]

HOME / ⌂ → (Editor)

The Content Manager app's editor feature enables you to add your desired templates.

1 Select the template of your desired format. (You can choose between Landscape mode and Portrait mode.)
2 Modify the template's text.
  2-1. Apply your desired font style (Size, Weight, Underline, Italic)
3 Modify the media file.
  3-1. Select and apply the rate you want.
4 Save the template by clicking [Save] in the top right-hand corner of the screen.
5 Check that the template you saved is shown in the template list.

Supported Photo & Video Files

NOTE

- Subtitles are not supported.
- The photo feature is not supported in OLED model.

Supported video codecs

Extension	Codec	
.asf, .wmv	Video	VC-1 Advanced Profile (except for WMVA), VC-1 Simple and Main Profiles
	Audio	WMA Standard (excluding WMA v1/WMA Speech)
.avi	Video	Xvid (excluding 3 warp-point GMC), H.264/AVC, Motion Jpeg, MPEG-4
	Audio	MPEG-1 Layer I, II, MPEG-1 Layer III (MP3), Dolby Digital, LPCM, ADPCM, DTS
.mp4, .m4v, .mov	Video	H.264/AVC, MPEG-4, HEVC
	Audio	Dolby Digital, Dolby Digital Plus, AAC, MPEG-1 Layer III (MP3)
.3gp .3g2	Video	H.264/AVC, MPEG-4
	Audio	AAC, AMR-NB, AMR-WB
.mkv	Video	MPEG-2, MPEG-4, H.264/AVC, VP8, VP9, HEVC
	Audio	Dolby Digital, Dolby Digital Plus, AAC, PCM, DTS, MPEG-1 Layer I, II, MPEG-1 Layer III (MP3)
.ts, .trp, .tp, .mts	Video	H.264/AVC, MPEG-2, HEVC
	Audio	MPEG-1 Layer I, II, MPEG-1 Layer III (MP3), Dolby Digital, Dolby Digital Plus, AAC, PCM
.mpg, .mpeg, .dat	Video	MPEG-1, MPEG-2
	Audio	MPEG-1 Layer I, II, MPEG-1 Layer III (MP3)
.vob	Video	MPEG-1, MPEG-2
	Audio	Dolby Digital, MPEG-1 Layer I, II, DVD-LPCM

Maximum transmit ratio	
Full HD movie	H.264 1920 x 1080@60P BP/MP/HP@L4.2 40Mbps HEVC 1920 x 1080@60P Main/Main10@L4.1 40Mbps
ULTRA HD movie (UHD models only.)	H.264 3840 x 2160@30P BP/MP/HP@L5.1 50Mbps HEVC 3840 x 2160@60P Main/Main10@L5.1 60Mbps

Supported Photo File Formats

File type	Format	Resolution
.jpeg, .jpg, .jpe	JPEG	• Minimum: 64 x 64 • Maximum: Normal Type: 15360 (W) x 8640 (H) Progressive Type: 1920 (W) x 1440 (H)
.png	PNG	• Minimum: 64 x 64 • Maximum: 5760 (W) x 5760 (H)
.bmp	BMP	• Minimum: 64 x 64 • Maximum: 1920 (W) x 1080 (H)

Tips for using USB storage devices

- Only USB storage devices are recognized.
- USB storage devices connected to the monitor through a USB hub may not work properly.
- USB storage devices that use an automatic recognition program may not be recognized.
- USB storage devices that use their own drivers may not be recognized.
- The recognition speed of a USB storage device may depend on each device.
- Please do not turn off the display or unplug the USB device when the connected USB storage device is working. When the device is suddenly separated or unplugged, the stored files or the USB storage device may be damaged.
- Please do not connect the USB storage device which was artificially maneuvered on the PC. The device may cause the product to malfunction or fail to be played. Remember to only use USB storage devices that store normal music, image, and/or movie files.
- Storage devices formatted with utility programs that are not supported by Windows may not be recognized.
- Please connect power to a USB storage device (over 0.5 A) which requires an external power supply. Otherwise, the device may not be recognized.
- Please connect a USB storage device with the cable offered by the device maker.
- Some USB storage devices may not be supported or operated smoothly.
- File alignment methods of the USB storage device is similar to Windows XP and filenames can include up to 100 English characters.
- Be sure to back up important files since data stored in a USB memory device may be damaged. We will not be responsible for any data loss.
- If the USB HDD does not have an external power source, the USB device may not be detected. So make sure to connect it to an external power source.
  - Please use a power adapter for an external power source. No USB cable is provided for an external power source.

- If your USB storage device has multiple partitions, or if you use a USB multi-card reader, you can use up to four partitions or USB memory devices.
- If a USB storage device is connected to a USB multi-card reader, its volume data may not be detected.
- If the USB storage device does not work properly, remove it and connect it again.
- If the USB storage device is connected in Standby Mode, a specific hard disk will automatically be loaded when the display is turned on.
- The recommended capacity is 1 TB or less for a USB external hard disk and 32 GB or less for USB memory.
- Any device with more than the recommended capacity may not work properly.
- If a USB external hard disk with an energy saving feature does not work, turn the hard disk off and on again to make it work properly.
- USB storage devices (USB 2.0 or below) are also supported. However, they may not work properly in the videos list.
- A maximum of 999 folders or files can be recognized under one folder.
- When distributing contents to USB while playing a video in UHD resolution, the video might experience temporary stuttering.
- USB storage devices supported by a mobile device may not be recognized.
- Even if multiple USB storage devices are connected, only one USB storage device can be used.

Group Manager 2.0

This feature enables you to group together multiple monitor sets on a single network into the same group and to distribute content (schedules and playlists) or copy setting data on a group basis. This feature has two modes, Master and Slave, and it can access the browser on your PC or mobile device.

[Master]

- Add, edit, and delete group.
- Clone your device's settings data.
- Distribute [Schedule] and [Playlists] on a group basis.
- All monitor sets initially come in Master mode.

[Slave]

- Play [Schedule] and [Playlists] distributed in Master mode.
- Remove monitor sets for their groups.
- Monitor sets that have been added to a group are automatically switched to Slave mode. Conversely, when a monitor set has been deleted from a group, it is automatically initialized and switched to Master mode.
- If a new Slave has been added to an existing group, or if the [Data Cloning] or the distribution of [schedule]/[Playlist] has not been properly performed, the [Data Cloning] or [SYNCHRONIZE] button will be activated.
- You can duplicate the master device's setting data to the group by using [Data Cloning].
- You can re-download the content distributed to the group by using [Synchronıze].

[GROUP MANAGEMENT]

- Creating a New Group
  1. Click [Add New Group].
  2. Enter a group name.
  3. Click [Add Device], select the devices you wish to add to the group, and add them.
  4. Click [Done], and you will see that a new group has been created.
- Editing a Group
  1. Click the group you wish to edit.
  2. Add a new device by using [Add Device].
  3. Delete a device by using [Delete Device].
  4. Check whether the devices in the group are connected to a network by using [Device Check].
  5. If there are any sets of devices in the group that are not [Data Cloning] or content synchronized, [Data Cloning] or [Synchronıze] button will be activated.
  6. You can re-copy the master device's setting data to the group by using [Data Cloning].
  7. You can re-distribute the content distributed to the group by using [Synchronıze].
- Deleting a Group
  1. Click [Delete Group].
  2. Select the group you wish to delete and click [Delete].
  3. Check that the group you selected has been deleted.
- ALL DEVICES VIEW: All Devices View: This page enables you to manage all slave monitor sets that are connected to the same network.
  1. Click [All Devices View].
  2. Click [Reset Device Mode].
  3. Select the slave monitor set whose device mode you wish to change and click [Reset].

[Setting Data Cloning]

1 Select your desired group and click Clone.
2 Check that the data have been copied on the slave sets.

[Content Distribute]

1 Select the type of content you wish to distribute (Schedules or Playlists).
2 Select the content you wish to distribute.
3 Select the group to which you wish to distribute the content and click [Distribute].
4 Run the Content Manager app on the slave sets and check that the content has been distributed.

How to Use

- Monitor: Run, add, delete or edit app on the home screen.
- Mobile: Mobile devices: Run the app in the Launcher bar or access the app from a mobile device using the QR code or URL provided.

⚠ CAUTION

- You can create up to 25 groups.
- You can add up to 12 slave devices to a group.
- You can distribute the schedules stored on external devices after executing Content Manager's import operation.
- Make sure to delete all schedules stored on the slave sets before distributing any schedules.
- A list of devices you can add to your desired group appears only when the following conditions have been met:
  - The devices you wish to add must be on the same network as the master device.
  - The devices you wish to add must be in Master mode, and they must not belong to any existing group.
  - The UPnP feature must be enabled (go to [General] > [Network] > UPnP and set it to [On]).
- It may not work properly in wireless network environments. It is recommended you use a wired network.
- Run the initial settings for Slave function when deleting the group.

Gallery Mode

CSAB, CSAA, CSAC, CBAE, CBAF, CBAA

This mode allows you to appreciate the natural environment and famous paintings.

HOME / ⌂ → Open the [Gallery Mode] app.

- You can click and play the representative theme image that appears in the middle of the screen, or click the theme preview image that appears at the bottom of the screen to play.
- You can also go to [MY THEMES] at the top right of the screen and set the order of the themes to play.
- Within the theme player, you can go to the theme selection list through [GO TO LIST] and turn on or off the background music through [THEME SOUND].
- A total of 5 themes ([Sunny Day], [Rainy Day], [Art Gallery], [Art Photos], and [Colorful Spring]) are available, and the supported images are as follows.

ScreenShare

CSAB, CSAA, CSAC, CBAA

This feature allows the screen of a user's device such as a mobile or PC Windows to be shared with a display using a wireless connection such as WiDi or Miracast.

How to Use [ScreenShare]

INPUT / → → [ScreenShare]

1 Connect according to the instructions provided by the guide that can be accessed through the CONNECTION GUIDE button in the upper right.

2 Once the connection is established, Screen Share between the user device and the monitor is enabled.

NOTE

- For the information on how to use Intel WiDi, visit PC/laptop manufacturer webpage.
- This feature only works properly with WiDi 3.5 or later versions.
- This feature only works on Windows 8.1 or later.

MANAGEMENT TOOLS

Control Manager

Control and check the status of the display through the Web browser.
This function is available for PCs and mobile devices.
Different features are supported depending on the product.

Function

- [Dashboard]: Display a summary of the product's status and provides links to each page.
- [Display & sound]: Provides features such as Screen Brightness, Sound, Input, and Reboot.
- [Time Setting]: Enable/disable Set Automatically feature and displays/changes the time set for the product.
- [Network]: Set the name and IP address of your Signage monitor.
- [Tile Mode]: Display the tile mode settings of the product.
- [Fail Over]: Turns the Fail Over feature on or off and sets related items.
- [Play via URL]: Turn Play via URL on or off and set URLs.
- [S/W Update]: Update the firmware of the product.
- [Charts]: Output the product's status information such as its temperature and fan status.
- [Log]: Output product malfunction records.
- [System Information]: Output information such as the product's software version and model name.

Picture ID

CSAB, CSAA, CSAC, CBAE, CBAF, CBAA

[Picture ID] is used to change the settings of a specific set (display) using a single IR receiver for multi-vision. Communication is possible between a monitor with an IR receiver and other monitors using RS-232C cables. Each monitor is identified by a Set ID. Setting [Picture ID] allows you to only use the remote control with monitors with a [Set ID] that matches the [Picture ID].

1 Assign [Set ID] to the installed monitors as shown below:

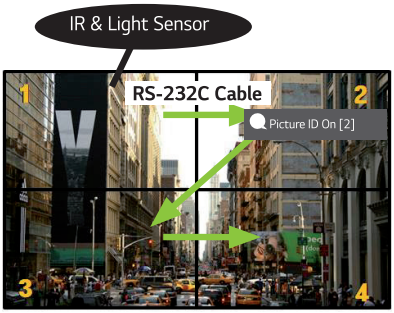

2 Press the red [Picture ID] [On] button on the remote control.

3 Make sure that the Picture ID you set is identical to the [Set ID] of the monitory you wish to control.

- A set with a [Set ID] that is different from the [Picture ID] cannot be controlled by IR signals.

NOTE

- If [Picture ID] has been set to 2, only the upper right monitor, which has a [Set ID] of 2, can be controlled by IR signals.
- If you press the green [Picture ID] [Off] button on your remote control, the [Picture ID] for all monitors are turned off. If you then press any button on the remote control, all monitors can be controlled by IR signals regardless of their [Set ID]'s.

IR CODE

- All models do not support the HDMI/USB function.
- Some key codes may not be supported depending on the model.

Code (Hex)	Function	Remarks
08	(Power)	Remote control button
C4	MONITOR ON	Remote control button
C5	MONITOR OFF	Remote control button
95	ENERGY SAVING	Remote control button
0B	INPUT (Select input)	Remote control button
10	Number Key 0	Remote control button
11	Number Key 1	Remote control button
12	Number Key 2	Remote control button
13	Number Key 3	Remote control button
14	Number Key 4	Remote control button
15	Number Key 5	Remote control button
16	Number Key 6	Remote control button
17	Number Key 7	Remote control button
18	Number Key 8	Remote control button
19	Number Key 9	Remote control button
02	(Vol +)	Remote control button
03	(Vol -)	Remote control button
E0	Brightness (Page Up)	Remote control button
E1	Brightness (Page Down)	Remote control button
DC	3D (3D)	Remote control button
32	1/a/A	Remote control button
2F	CLEAR	Remote control button
7E	SIMPLINK	Remote control button
79	ARC (Mark/Aspect Ratio)	Remote control button
4D	PSM (Picture Mode)	Remote control button
09	(MUTE)	Remote control button

Code (Hex)	Function	Remarks
43	(Settings/Menu)	Remote control button
99	Auto Configuration	Remote control button
40	(Up)	Remote control button
41	(Down)	Remote control button
06	(Right)	Remote control button
07	(Left)	Remote control button
44	(OK)	Remote control button
28	(BACK)	Remote control button
7B	Tile	Remote control button
5B	Exit	Remote control button
72	Picture ID On (red)	Remote control button
71	Picture ID Off (green)	Remote control button
63	Yellow	Remote control button
61	Blue	Remote control button
5F	W.Bal	Remote control button
3F	(S.Menu)	Remote control button
7C	(Home)	Remote control button
97	Swap	Remote control button
96	Mirror	Remote control button

CONTROLLING MULTIPLE PRODUCTS

- This only applies to certain models.

Use this method to connect several products to a single PC. You can control several products at a time by connecting them to a single PC.

In the Option menu, the Set ID must be between 1 and 1000 without being duplicated.

Connecting cables

- Images may differ according to the model.

Connect the RS-232C cable as shown in the picture.

The RS-232C protocol is used for communication between the PC and product. You can turn the product on/off, select an input source and adjust the OSD menu from your PC.

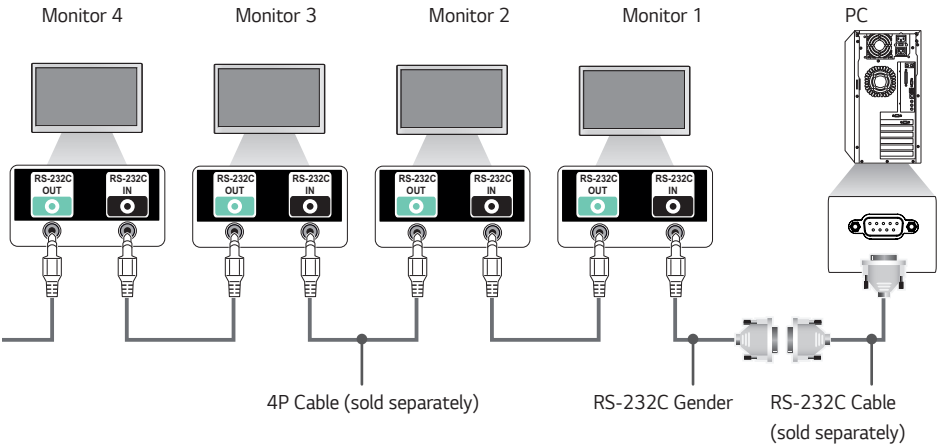

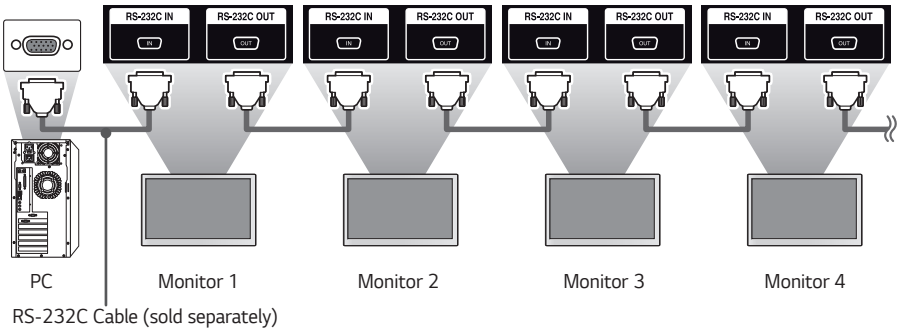

Communication Parameter

Baud Rate: 9600 BPS
Data Length: 8 bits
Parity Bit: None
Stop Bit: 1 bit
Flow Control: None
Communication Code: ASCII

NOTE

- When using 3-wire connections (non-standard), an IR daisy chain cannot be used.
- Be sure to only use the provided gender to connect properly.
- When you have daisy-chained multiple Signage products to control them simultaneously, if you attempt to turn on/off the master device in a continuous manner, some products may not turn on. In this case, you can turn those monitors on by pressing the **MONITOR ON** button, not the Power button.

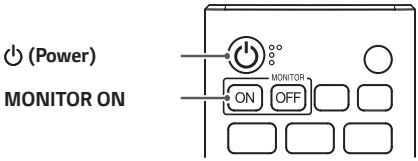

Command Reference List

		Command		Data (Hexadecimal)
		1	2	
01	[Power]	k	a	00 to 02
02	Select Input	x	b	See Select Input
03	[Aspect Ratio]	k	c	See [Aspect Ratio]
04	[Brightness Control]	j	q	00 to 04
05	[Picture Mode]	d	x	See [Picture Mode]
06	[Contrast]	k	g	00 to 64
07	[Brightness]	k	h	00 to 64
08	[Sharpness]	k	k	00 to 32
09	[Color]	k	i	00 to 64
10	[Tint]	k	j	00 to 64
11	[Color Temperature]	x	u	70 to D2
12	[Balance]	k	t	00 to 64
13	[Sound Mode]	d	y	See [Sound Mode]
14	[Mute on]	k	e	00 to 01
15	Volume Control	k	f	00 to 64
16	[Current Time] 1 (year/month/day)	f	a	See [Current Time] 1
17	[Current Time] 2 (hour/minute/second)	f	x	See [Current Time] 2
18	[No Signal Power Off (15 Min)]	f	g	00 to 01
19	[No IR Power Off (4hour)]	m	n	00 to 01
20	[Language]	f	i	See [Language]
21	Default Settings	f	k	00 - 02
22	Current Temperature	d	n	FF
23	[Key]	m	c	See [Key]
24	Time Elapsed	d	l	FF

		Command		Data (Hexadecimal)
		1	2	
25	Check product serial number	f	y	FF
26	[Software Version]	f	z	FF
27	[White Balance] Red Gain	j	m	00 to FE
28	[White Balance] Green Gain	j	n	00 to FE
29	[White Balance] Blue Gain	j	o	00 to FE
30	[White Balance] Red Offset	s	x	00 to 7F
31	[White Balance] Green Offset	s	y	00 to 7F
32	[White Balance] Blue Offset	s	z	00 to 7F
33	[Backlight]	m	g	00 to 64
34	[Screen Off]	k	d	00 to 01
35	[Tile Mode]	d	d	00 to FF
36	Check [Tile Mode]	d	z	FF
37	[Tile ID]	d	i	See [Tile ID]
38	[Natural Mode]	d	j	00 to 01
39	[DPM] / [DPM (Standby Mode)]	f	j	See [DPM] / [DPM (Standby Mode)]
40	Remote Control/Local Key Lock	k	m	00 to 01
41	[Power On Delay]	f	h	00 to FA
42	Select [Fail Over] Mode	m	i	00 to 02
43	Select [Fail Over] Input	m	j	See Select [Fail Over] Input
44	Remote Control Key Lock	t	p	00 to 02
45	Local Key Lock	t	o	00 to 02
46	[Status Check]	s	v	See [Status Check]
47	[Daylight Saving Time]	s	d	See [Daylight Saving Time]
48	[PM Mode]	s	n, 0c	00 to 05
49	[ISM Method]	j	p	See [ISM Method]

		Command		Data (Hexadecimal)
		1	2	
50	[Network Setting]	s	n, 80(81)(82)	See [Network Setting]
51	[Power On Status]	t	r	00 to 02
52	Wired [Wake On LAN] / [Wake On LAN (Networked Standby Mode)]	f	w	00 to 01
53	[Screen Rotation]	t	h	00 to 03
54	[Time Sync]	s	n, 16	00 to 01
55	[Contents Sync]	t	g	00 to 01
56	[LAN Daisy Chain]	s	n, 84	00 to 01
57	[External Input Rotation]	s	n, 85	00 to 03
58	[Beacon]	s	n, 88	00 to 01
59	[Brightness Scheduling] Mode	s	m	00 to 01
60	[Brightness Scheduling]	s	s	See [Brightness Scheduling]
61	[Multi Screen] Mode & Input	x	c	See [Multi-screen] Mode & Input
62	[Aspect Ratio] (Multi screen)	x	d	See [Aspect Ratio] (Multi screen)
63	[Screen Off] (Multi screen)	x	e	See [Screen Off] (Multi screen)
64	[Screen Off Always]	s	n, 0d	00 to 01
65	Stop Video	k	x	00 to 01
66	Wireless [Wake On LAN] / [Wake On LAN (Networked Standby Mode)]	s	n, 90	00 to 01
67	[OSD Lock]	k	l	00 to 01
68	[HDMI IT Content]	s	n, 99	00 to 01
69	[Holiday Setting]	s	n, 9b	See [Holiday Setting]
70	[UPnP]	s	n, 9c	00 to 01
71	[Home Dashboard Lock]	s	n, 9d	00 to 01
72	[USB Lock]	s	n, 9e	00 to 01

		Command		Data (Hexadecimal)
		1	2	
73	[Wi-Fi Lock]	s	n, 9f	00 to 01
74	[Screen Share Lock]	s	n, a0	00 to 01
75	[Backup via Storage]	s	n, a1	See [Backup via Storage]
76	[Digital Audio Input]	s	n, a2	00 to 01
77	[Booting Logo Image]	s	n, a3	00 to 01
78	[SoftAP]	s	n, a4	00 to 01
79	[Natural Size]	s	n, a5	00 to 64
80	Play Saved Internal Media	s	n, a8	See Playback of Saved Internal Media
81	[No Signal Image]	s	n, a9	00 to 01
82	[Audio Out]	s	n, aa	00 to 02
83	[DPM Wake Up Control] / [DPM (Standby Mode) Wake Up Control]	s	n, 0b	00 to 01
84	Check [Fan] Failure	d	w	FF
85	[Apply to all inputs]	s	n, 52	01
86	[Timer Power On]	f	d	See [Timer Power On]
87	[Timer Power Off]	f	e	See [Timer Power Off]
88	LCIN008 Control	s	n, b8	See LCIN008 Control
89	[Transfer Control]	s	n, cb	See Transfer Control
90	Multichannel	s	n, 76	01 to 09
91	Change Setid	j	x	See Change Setid
92	[Gamma]	s	n, ad	00 to 03
93	[Black Level]	s	n, ae	00 to 02
94	[UHD Deep Color]	s	n, af	See [UHD Deep Color]
95	[Sync Mode]	s	n, b0	00 to 01
96	[Input Manager]	s	n, b1	See [Input Manager]
97	[PC/OPS Power Control]	s	n, 8b	00 to 02
98	[LED Local Dimming]	s	n, c1	00 to 01
99	[Scan Inversion]	s	n, 87	00 to 01

		Command		Data (Hexadecimal)
		1	2	
100	[Frame Control]	s	n, b7	00 to 01
101	[Average Picture Level Auto Control]	s	n, be	00 to 01
102	Read Brightness Value	m	u	FF
103	[Screen Fault Detection]	t	z	00 to 01
104	[Stereo Mode]	s	n, c2	00 to 02
105	[HDR Picture Mode]	s	n, c4	See [HDR Picture Mode]
106	[Dynamic Tone Mapping]	s	n, c5	00 to 01
107	[LED Local Dimming]	s	n, c6	00 to 03
108	[USB2 to HDBaseT]	s	n, c3	00 to 01
109	[Change Password]	s	n, a7	See [Change Password]
110	[Brightness Range Adjustment]	s	n, ab	See [Brightness Range Adjustment]
111	[Color Calibration]	s	n, d6	00 to 01
112	[Quiet Mode]	s	n, c7	00 to 01
113	Automatic adjustment	j	u	01
114	Horizontal location	f	q	00 to 64
115	Vertical location	f	r	00 to 64
116	Horizontal Size	f	s	00 to 64
117	Intelligent Auto	t	i	00 to 01
118	Genlock	s	n, dc	00 to 01
119	[Vectorscope] On/Off	s	n, e7	00 to 01
120	[Waveform] On/Off	s	n, e8	00 to 01
121	False Color Mode	s	n, e9	00 to 02
122	False Color – Zebra	s	n, ea	00 to 64
123	False Color – Color	s	n, eb	00 to 64
124	SDR/HDR Signal Format	s	n, ec	00 to 02
125	HDR EOTF	s	n, ed	00 to 0e
126	[Phase Shift]	s	n, ee	0000 to 0168

* Note Commands may not work when there is no external input used.

* Some commands may not be supported on some models.

Transmission/Reception Protocol

Transmission

(Command1)(Command2)( )(Set ID)( )(Data)(Cr)

* (Command1): This command is used to identify between the adjustment setting or the user adjustment modes.
* (Command2): This command is used to control the monitor.
* (Set ID): Used for selecting a set you want to control. A unique Set ID can be assigned to each set ranging from 1 to 1000 (01H to 3E8H) under Settings in the OSD menu. Selecting '00H' for Set ID allows the simultaneous control of all connected monitors. (The maximum value may differ depending on the model.)
* (Data): Transmits command data. Data count may increase depending on the command.
* (Cr): Carriage Return. This parameter corresponds to '0 x 0D' in ASCII code.
* ( ): White Space. This parameter corresponds to '0 x 20' in ASCII code.

Acknowledgment

(Command2)( )(Set ID)( )(OK/NG)(Data)(x)

* The product transmits an ACK (acknowledgment) based on this format when receiving normal data. At this point, if the data is FF, it indicates the present status data. If the data is in data write mode, it returns the data of the PC computer.
* If a command is sent with Set ID '00' (=0 x 00), the data is reflected to all monitors and they do not send an acknowledgment (ACK).
* If you send "FF" as the value of the data in control mode via RS-232C, you can check the value currently set for the relevant feature (not applicable to some features).
* Some commands may not be supported on some models.

01. [Power] (Command: k a)

Controls the power on/off status of the monitor.

Transmission

(k)(a)( )(Set ID)( )(Data)(Cr)

Data 00: [Off]
01: [On]
02: Restart

Acknowledgment

(a)( )(Set ID)( )(OK/NG)(Data)(x)

* The Acknowledgment signal is returned properly only when the monitor is fully powered on.
* There may be a delay between the Transmission and Acknowledgment signals.
* This feature may not be available for all models.

02. Select Input (Command: x b)

Selects an input signal.

Transmission

(x)(b)( )(Set ID)( )(Data)(Cr)

Data 20: AV
40: COMPONENT
60: RGB
70: DVI-D (PC)
80: DVI-D (DTV)
90: HDMI1 (DTV)
A0: HDMI1 (PC)
91: HDMI2 (DTV)
A1: HDMI2 (PC)
92: OPS/HDMI3/DVI-D (DTV)
A2: OPS/HDMI3/DVI-D (PC)
95: OPS/DVI-D (DTV)
A5: OPS/DVI-D (PC)
96: HDMI3/DVI-D (DTV)
A6: HDMI3/DVI-D (PC)
97: HDMI3/HDMI2/DVI-D (DTV)
A7: HDMI3/HDMI2/DVI-D (PC)
98: OPS (DTV)
A8: OPS (PC)
99: HDMI2/OPS (DTV)
A9: HDMI2/OPS (PC)
C0: DISPLAYPORT (DTV)
D0: DISPLAYPORT (PC)
C1: DISPLAYPORT/USB-C (DTV)
D1: DISPLAYPORT/USB-C (PC)
C2: HDMI3 (DTV)
D2: HDMI3 (PC)
C3: HDBaseT (DTV)
D3: HDBaseT (PC)
E0: SuperSign webOS Player
E1: Others
E2: Multi Screen
E3: Play via URL
E8: SI App
F0 : SDI 1
F1 : SDI 2
F2 : SDI 3
F3 : SDI 4
F4 : SDI DUAL 12
F5 : SDI DUAL 34
F6 : SDI QUAD AUTO
F7 : SDI QUAD 2SI
F8 : SDI QUAD SQUARE
F9 : SDI QUAD VIEW

Acknowledgment

(b)( )(Set ID)( )(OK/NG)(Data)(x)

* Some input signals may not be available for all models.
* If it is not distributed from SuperSign W, WebOS Player returns NG.
* If it says “Read” from the IDB mode, it will respond as a PC Label type.
* SI App only supports Set operation through RS232C.

03. [Aspect Ratio] (Command: k c)

Adjusts the aspect ratio of your monitor.

Transmission

(k)(c)( )(Set ID)( )(Data)(Cr)

Data 02: [Full Screen]
06: [Original]

Acknowledgment

(c)( )(Set ID)( )(OK/NG)(Data)(x)

* The aspect ratio may differ depending on the model's input configuration.

04. [Brightness] (Command: j q)

Sets the brightness of your monitor.

Transmission

(j)(q)( )(Set ID)( )(Data)(Cr)

Data 00: [Off]
01: [Minimum]
02: [Medium]
03: [Maximum]
04: [Auto]

Acknowledgment

(q)( )(Set ID)( )(OK/NG)(Data)(x)

* This feature may not be available for all models.

05. [Picture Mode] (Command: d x)

Selects a picture mode.

Transmission
(d)(x)( )(Set ID)( )(Data)(Cr)

Data 00: [Mall/QSR]
01: [General]
02: [Gov./Corp.]
03: [Transportation]
04: [Education]
05: [Expert1]
08: [Auto Power Save]
11: [Calibration]
12: [Hospital]

Acknowledgment
(x)( )(Set ID)( )(OK/NG)(Data)(x)

* Some picture modes may not be available for all models.

06. [Contrast] (Command: k g)

Adjusts the screen contrast.

Transmission
(k)(g)( )(Set ID)( )(Data)(Cr)

Data 00-64: Contrast 0-100

Acknowledgment
(g)( )(Set ID)( )(OK/NG)(Data)(x)

07. [Brightness] (Command: k h)

Adjusts the screen brightness.

Transmission
(k)(h)( )(Set ID)( )(Data)(Cr)

Data 00-64: Brightness 0-100

Acknowledgment
(h)( )(Set ID)( )(OK/NG)(Data)(x)

08. [Sharpness] (Command: k k)

Adjusts the screen sharpness.

Transmission
(k)(k)( )(Set ID)( )(Data)(Cr)

Data 00-32: Sharpness 0-50

Acknowledgment
(k)( )(Set ID)( )(OK/NG)(Data)(x)

09. [Color] (Command: k i)

Adjusts the screen colors.

Transmission
(k)(i)( )(Set ID)( )(Data)(Cr)

Data 00-64: Color 0-100

Acknowledgment
(i)( )(Set ID)( )(OK/NG)(Data)(x)

10. [Tint] (Command: k j)
Adjusts the screen tints.

Transmission
(k)(j)( )(Set ID)( )(Data)(Cr)
Data 00-64: Tint Red 50-Green 50

Acknowledgment
(j)( )(Set ID)( )(OK/NG)(Data)(x)

11. [Color Temperature] (Command: x u)
Adjusts the screen color temperature.

Transmission
(x)(u)( )(Set ID)( )(Data)(Cr)
Data 70-D2: 3200K-13000K

Acknowledgment
(u)( )(Set ID)( )(OK/NG)(Data)(x)

12. [Balance] (Command: k t)
Adjusts the sound balance.

Transmission
(k)(t)( )(Set ID)( )(Data)(Cr)
Data 00-64: Left 50-Right 50

Acknowledgment
(t)( )(Set ID)( )(OK/NG)(Data)(x)

* This feature may not be available for all models.

13. [Sound Mode] (Command: d y)
Selects a sound mode.

Transmission
(d)(y)( )(Set ID)( )(Data)(Cr)
Data 01: [Standard]
02: [Music]
03: [Cinema]
04: [Sports]
05: [Game]
07: [News (Clear Voice III)]

Acknowledgment
(y)( )(Set ID)( )(OK/NG)(Data)(x)

* This feature may not be available for all models.

14. [Mute on] (Command: k e)
Mutes/unmutes audio.

Transmission
(k)(e)( )(Set ID)( )(Data)(Cr)
Data 00: [Mute] (Volume off)
01: Mute off (Volume on)

Acknowledgment
(e)( )(Set ID)( )(OK/NG)(Data)(x)

* This feature may not be available for all models.

15. Volume Control (Command: k f)
Adjusts the playback volume.

Transmission
(k)(f)( )(Set ID)( )(Data)(Cr)
Data 00-64: Volume 0-100

Acknowledgment
(f)( )(Set ID)( )(OK/NG)(Data)(x)

* This feature may not be available for all models.

16. [Current Time] 1 (year/month/day) (Command: f a)

Sets the Clock 1 (year/month/day) values and Auto Time.

Transmission

1. (f)(a)( )(Set ID)( )(Data1)( )(Data2)( )(Data3)(Cr)
2. (f)(a)( )(Set ID)( )(0)(0)( )(Data1)(Cr)

1. When setting Clock 1 (year/month/day)

Data1 00-: 2010 -
Data2 01-0C: January - December
Data3 01-1F: 1-31

* The minimum and maximum values for Data1 differ depending on the product's release year.
* Enter "fa [Set ID] ff" to view Clock 1 (year/month/day) settings.

2. When Setting Auto Time

Data1 00: [Auto]
01: [Manual]

* To view the set value of the Auto time, enter "fa [Set ID] 00 ff".

Acknowledgment

1. (a)( )(Set ID)( )(OK/NG)(Data1)(Data2)(Data3)(x)
2. (a)( )(Set ID)( )(OK/NG)(0)(0)(Data1)(x)

17. [Current Time] 2 (hour/minute/second) (Command: f x)

Sets the Clock 2 values (hour/minute/second).

Transmission

(f)(x)( )(Set ID)( )(Data1)( )(Data2)( )(Data3)(Cr)

Data1 00-17: 00-23 hours
Data2 00-3B: 00 - 59 minutes
Data3 00-3B: 00-59 seconds

* Enter "fx [Set ID] ff" to view the Time 2 (hour/minute/second) settings.
* This feature is only available when Clock 1 (year/month/day) has been set.

Acknowledgment

(x)( )(Set ID)( )(OK/NG)(Data1)(Data2)(Data3)(x)

18. [No Signal Power Off(15Min)] (Command: f g)

Sets the monitor to enter Automatic Standby mode if there is no signal for 15 minutes.

Transmission

(f)(g)( )(Set ID)( )(Data)(Cr)

Data 00: [Off]
01: [On]

Acknowledgment

(g)( )(Set ID)( )(OK/NG)(Data)(x)

19. [No IR Power Off] (4Hour) (Command: m n)

Activates Auto Power Off when there is no IR signal for 4 hours.

Transmission

(m)(n)( )(Set ID)( )(Data)(Cr)

Data 00: [Off]
01: [On]

Acknowledgment

(n)( )(Set ID)( )(OK/NG)(Data)(x)

20. [Language] (Command: f i)

Sets the OSD language.

Transmission

(f)(i)( )(Set ID)( )(Data)(Cr)

Data 00: Czech
01: Danish
02: German
03: English
04: Spanish (Europe)
05: Greek
06: French
07: Italian
08: Dutch
09: Norwegian
0A: Portuguese
0B: Portuguese (Brazil)
0C: Russian
0D: Finnish
0E: Swedish
0F: Korean
10: Chinese (Mandarin)
11: Japanese
12: Chinese (Cantonese)
13: Arabic
14: Turkish

Acknowledgment

(i)( )(Set ID)( )(OK/NG)(Data)(x)

* Some languages may not be available for all models.

21. [Default] Settings (Command: f k)

Executes Reset.
(Initialize Screen can only be executed in RGB input mode.)

Transmission
(f)(k)( )(Set ID)( )(Data)(Cr)

Data 00: [Picture Reset]
02: [Reset to Initial Settings]

Acknowledgment
(k)( )(Set ID)( )(OK/NG)(Data)(x)

* This feature may not be available for all models.

22. Current Temperature (Command: d n)

Checks the current temperature of the product.

Transmission
(d)(n)( )(Set ID)( )(Data)(Cr)

Data FF: Status Check

Acknowledgment
(n)( )(Set ID)( )(OK/NG)(Data)(x)

* The temperature is displayed in hexadecimal.

23. [Key] (Command: m c)

Sends a key code for the IR remote control.

Transmission
(m)(c)( )(Set ID)( )(Data)(Cr)

Data IR_KEY_CODE

Acknowledgment
(c)( )(Set ID)( )(OK/NG)(Data)(x)

* For key codes, see IR Codes.
* Some key codes may not be supported depending on the model.

24. Time Elapsed (Command: d l)

Displays the time that has elapsed after your monitor has turned on.

Transmission
(d)(l)( )(Set ID)( )(Data)(Cr)

Data FF: Read status

Acknowledgment
(l)( )(Set ID)( )(OK/NG)(Data)(x)

* The data received is displayed in hexadecimal.

25. Product Serial Number Check (Command: f y)

Checks the serial number of the product.

Transmission
(f)(y)( )(Set ID)( )(Data)(Cr)

Data FF: Check product serial number

Acknowledgment
(y)( )(Set ID)( )(OK/NG)(Data)(x)

* Data is in ASCII format.

26. [Software Version] (Command: f z)

Checks the software version of the product.

Transmission
(f)(z)( )(Set ID)( )(Data)(Cr)

Data FF: Check the software version

Acknowledgment
(z)( )(Set ID)( )(OK/NG)(Data)(x)

27. [White Balance] Red Gain (Command: j m)

Adjusts the red gain value for white balance.

Transmission
(j)(m)( )(Set ID)( )(Data)(Cr)

Data 00-FE: Red Gain 0-254
FF: Checks red gain value

Acknowledgment
(m)( )(Set ID)( )(OK/NG)(Data)(x)

28. [White Balance] Green Gain (Command: j n)

Adjusts the green gain value for white balance.

Transmission
(j)(n)( )(Set ID)( )(Data)(Cr)

Data 00-FE: Green Gain 0-254
FF: Checks green gain value

Acknowledgment
(n)( )(Set ID)( )(OK/NG)(Data)(x)

29. [White Balance] Blue Gain (Command: j o)

Adjusts the blue gain value for white balance.

Transmission
(j)(o)( )(Set ID)( )(Data)(Cr)

Data 00-FE: Blue Gain 0-254
FF: Checks blue gain value

Acknowledgment
(o)( )(Set ID)( )(OK/NG)(Data)(x)

30. [White Balance] Red Offset (Command: s x)

Adjusts the red offset value for white balance.

Transmission
(s)(x)( )(Set ID)( )(Data)(Cr)

Data 00-7F: Red Offset 0-127
FF: Checks red offset value

Acknowledgment
(x)( )(Set ID)( )(OK/NG)(Data)(x)

31. [White Balance] Green Offset (Command: s y)

Adjusts the green offset value for white balance.

Transmission
(s)(y)( )(Set ID)( )(Data)(Cr)

Data 00-7F: Green Offset 0-127
FF: Checks green offset value

Acknowledgment
(y)( )(Set ID)( )(OK/NG)(Data)(x)

32. [White Balance] Blue Offset (Command: s z)

Adjusts the blue offset value for white balance.

Transmission
(s)(z)( )(Set ID)( )(Data)(Cr)

Data 00-7F: Blue Offset 0-127
FF: Checks blue offset value

Acknowledgment
(z)( )(Set ID)( )(OK/NG)(Data)(x)

33. [Backlight] (Command: m g)

Adjusts the backlight brightness.

Transmission

(m)(g)( )(Set ID)( )(Data)(Cr)

Data 00-64: Backlight 0-100

Acknowledgment

(g)( )(set ID)()(OK/NG)(Data)(x)

* The LED Light of the LED model uses the corresponding command.

34. [SCREEN OFF] (Command: k d)

Turns off/off the screen.

Transmission

(k)(d)( )(Set ID)( )(Data)(Cr)

Data 00: Screen On
01: Screen Off

Acknowledgment

(d)( )(Set ID)( )(OK/NG)(Data)(x)

* This feature may not be available for all models.

35. [Tile Mode] (Command: d d)

Sets a tile mode and values for the tile rows and columns.

Transmission

(d)(d)( )(Set ID)( )(Data)(Cr)

Data 00-FF: The first byte - tile column
The second byte - tile row

* 00, 01, 10, and 11 mean that the tile mode is off.
* The maximum value may differ depending on the model.

Acknowledgment

(d)( )(Set ID)( )(OK/NG)(Data)(x)

* This feature may not be available for all models.
* If you change the values on a Video Wall model, please reboot for it to work normally.

36. [Tile Mode] Check (Command: d z)

Checks the tile mode.

Transmission

(d)(z)( )(Set ID)( )(Data)(Cr)

Data FF: Check Tile Mode

Acknowledgment

(z)( )(Set ID)( )(OK/NG)(Data1)(Data2)(Data3)(x)

Data1 00: Tile Mode off
01: Tile Mode on
Data2 00-0F: Tile column
Data3 00-0F: Tile row

* This feature may not be available for all models.

37. [Tile ID] (Command: d i)

Sets the tile ID value of the product.

Transmission

(d)(i)( )(Set ID)( )(Data)(Cr)

Data 01-E1: Tile ID 1-225
FF: Checks the Tile ID

* The data value cannot exceed the value of row x column.

Acknowledgment

(i)( )(Set ID)( )(OK/NG)(Data)(x)

* If you enter a value that exceeds the value of row x column for the Data parameter (except for 0xFF), Ack becomes NG.
* This feature may not be available for all models.
* If you change the values on a Video Wall model, please reboot for it to work normally.

38. [Natural Mode] (In Tile Mode) (Command: d j)

To display the image naturally, the part of the image that would normally be displayed in the gap between the monitors is omitted.

Transmission

(d)(j)( )(Set ID)( )(Data)(Cr)

Data 00: [Off]
01: [On]

Acknowledgment

(j)( )(Set ID)( )(OK/NG)(Data)(x)

* This feature may not be available for all models.

39. [DPM] / [DPM (Standby Mode)] (Command: f j)

Sets the DPM(Display Power Management) function.

Transmission
(f)(j)( )(Set ID)( )(Data)(Cr)

Data 00: [Off]
02: 10 seconds
04: 1 minute
05: 3 minutes
06: 5 minutes
07: 10 minutes

Acknowledgment
(j)( )(Set ID)( )(OK/NG)(Data)(x)

* This feature may not be available for all models.

40. Remote Control/Local Key Operation Lock (Command: k m)

Adjusts the remote control/local key (front) lock.

Transmission
(k)(m)( )(Set ID)( )(Data)(Cr)

Data 00: [Off] (Lock Off)
01: [On] (Lock On)

* When the monitor is turned off, the power key works even in On (01) mode.

Acknowledgment
(m)( )(Set ID)( )(OK/NG)(Data)(x)

* This feature may not be available for all models.

41. [Power On Delay] (Command: f h)

Sets the schedule delay for when the power turns on. (Unit: seconds)

Transmission
(f)(h)( )(Set ID)( )(Data)(Cr)

Data 00-FA: Min 0- Max 250 (sec)

Acknowledgment
(h)( )(Set ID)( )(OK/NG)(Data)(x)

* The maximum value may differ depending on the model.

42. [Fail Over] Mode (Command: m i)

Selects a sound mode.

Transmission
(m)(i)( )(Set ID)( )(Data)(Cr)

Data 00: [Off]
01: [Auto]
02: [User Setting]

Acknowledgment
(i)( )(Set ID)( )(OK/NG)(Data)(x)

43. [Fail Over] Input Select (Command: m j)

Selects an input source for fail over. (This feature is only available when Fail Over is set to Custom.)

Transmission
(m)(j)( )(Set ID)( )(Data1)( )(Data2)( )(Data3)( )(Data4) ... ( )(DataN)(Cr)

Data1-N (Input priority 1-N)
60: RGB
70: DVI-D
90: HDMI1
91: HDMI2
92: OPS/HDMI3/DVI-D
95: OPS/DVI-D
96: HDMI3/DVI-D
97: HDMI3/HDMI2/DVI-D
98: OPS
99: HDMI2/OPS
C0: DISPLAYPORT
C1: DISPLAYPORT/USB-C
C2: HDMI3
C3: HDBaseT

Acknowledgment
(j)( )(SetID)( )(OK/NG)(Data1)(Data2)(Data3)(Data4) ... (DataN)(x)

* Some input signals may not be available for all models.
* The data number (N) may vary depending on the model. (The data number depends on the number of supported input signals.)
* This feature operates as the last input, and supports data in DTV format.

44. Remote Control Key Lock (Command: t p)

Configures the settings of the product's remote control key.

Transmission

(t)(p)( )(Set ID)( )(Data)(Cr)

Data 00: Unlocks all keys
01: Locks all keys except Power key
02: Locks all keys

Acknowledgment

(p)( )(Set ID)( )(OK/NG)(Data)(x)

* When the monitor is turned off, the power key works even in the locks on all of the keys (02) mode.

45. [Local Key Operation Lock] (Command: t o)

Configures the local key operation settings of the product.

Transmission

(t)(o)( )(Set ID)( )(Data)(Cr)

Data 00: Unlocks all keys
01: Locks all keys except Power key
02: Locks all keys

Acknowledgment

(o)( )(Set ID)( )(OK/NG)(Data)(x)

* When the monitor is turned off, the power key works even in the locks on all of the keys (02) mode.
* This feature may not be available for all models.

46. Status Check (Command: s v)

Checks the current signal of the product.

Transmission

(s)(v)( )(Set ID)( )(Data)( )(FF)(Cr)

Data 02: Check whether there is a signal
03: The monitor is currently in PM Mode
07: Checks whether the Top, Bottom and Main temperature sensors are functioning normally.
09: Fan Speed
10: RGB Sensing OK/NG (screen fault detection)
16: Check the humidity value
17: Check the value of the intensity of illumination
18: Check the status value of the slope of the product

Acknowledgment

(v)( )(Set ID)( )(OK/NG)(Data)(Data1)(x)

Data 02 (when a signal is found)
Data1 00: No signal
01: Signal present

Data 03 (when the monitor is currently in PM mode)
Data1 00: Screen is on
01: Screen is off
02: Screen Off Always is activated
03: Sustain Aspect Ratio is activated
04: Screen Off & Backlight On is activated

Data 07 (when checking whether the Top, Bottom and Main temperature sensors are working properly)
Data1 00: All temperature sensors are faulty
01: Top normal, Bottom faulty, Main faulty
02: Top faulty, Bottom normal, Main faulty
03: Top normal, Bottom normal, Main faulty
04: Top faulty, Bottom faulty, Main normal
05: Top normal, Bottom faulty, Main normal
06: Top faulty, Bottom normal, Main normal
07: All temperature sensors are normal
Data 10(when executing Screen Fault Detection)
Data 1 00: Screen Fault Detection result NG
07: Screen Fault Detection result OK

* When screen Fault Detection is set to Off or not supported, execution results are rendered "NG."

Data 16 (for checking the humidity value)
Data 1 0~100: Reads the %RH value of the current humidity (indicated as a Hex value).

Data 17 (for checking the value of the intensity of illumination)
Data 1 1~1000: Reads the Lux value of the current intensity of illumination (indicated as a Hex value).

Data 18 (for checking the status value of the slope of the product)
Data 1 00: 0 degrees
01: 90 degrees
02: 180 degrees
03: 270 degrees
04: Fallen forward
05: Fallen backward

Data 09(when checking the fan speed)

Acknowledgement
(v)( )(Set ID)( )(OK/NG)(Data)(Data1_1)(Data1_2)
...(DataN_1)(DataN_2)(x)

Data1_1:00~ff: First fan speed top 1 Byte
Data1_2: 00~ff: First fan speed bottom 1 Byte
...
DataN_1: 00~ff: Nth fan speed top 1 Byte
DataN_2: 00~ff: Nth fan speed bottom 1 Byte

Fan Speed: Hex 0~2008, Decimal 0~8200

* The data number (N) may vary depending on the model.
* This feature may not be available for all models.

47. [Daylight Saving Time] (Command: s d)

Sets Daylight Savings Time.

Transmission
(s)(d)( )(Set ID)( )(Data1)( )(Data2)( )
(Data3)( )(Data4)( )(Data5)( )(Cr)

Data1 00: Off (Data2-5: FF)
01: Start Time
02: End Time
Data2 01~0C: January - December
Data3 01-06: Week 1 - 6

* The maximum value of [Data3] may vary depending on the date.

Data4 00-06: (Sunday - Saturday)
Data5 00-17: 00 - 23 hours

* If you wish to read the start/end times, enter FF for parameters [Data2] through [Data5].

(Example 1: sd 01 01 ff ff ff ff - Checks the start time.
Example 2: sd 01 02 ff ff ff ff - Checks the end time.)

* This feature only works when Clock 1 (year/month/day) and Clock 2 (hour/minute/second) have been set.

Acknowledgment
(d)( )(Set ID)( )(OK/NG)(Data1)(Data2)
(Data3)(Data4)(Data5)(x)

* This feature may not be available for all models.

48. [PM Mode] (Command: s n, 0c)

Sets the PM mode.

Transmission
(s)(n)( )(Set ID)( )(0c)( )(Data)(Cr)

Data 00: [Power Off] (Basic)
01: [Sustain Aspect Ratio]
02: [Screen Off]
03: [Screen Off Always]
04: [Screen Off & Backlight On]
05: [Network Ready]

Acknowledgment
(n)( )(Set ID)( )(OK/NG)(0c)(Data)(x)

* This feature may not be available for all models.

49. [ISM Method] (Command: j p)

Selects an ISM method.

Transmission
(j)(p)( )(Set ID)( )(Data)(Cr)

Data 02: [Orbiter]
04: [White Wash]
08: [Off]
90: [User Image]
91: [User Video]

Acknowledgment
(p)( )(Set ID)( )(OK/NG)(Data)(x)

* This feature may not be available for all models.
* “02: [Orbiter]” is not supported while “91: [User Video]” is turned on.

50. [Network Setting] (Command: s n, 80 or 81 or 82)

Configures network and DNS settings.

Transmission

(s)(n)( )(Set ID)( )(Data1)( )(Data2)( )(Data3)( )(Data4)( )(Data5)(Cr)

Data1 80: Configures/views the temporary IP mode (Auto/Manual), subnet mask, and gateway.
81: Configures/views the temporary DNS address.
82: Saves temporary settings and views information about the current network.

* If Data1 is 80,

Data2 00: Auto
01: Manual
FF: Views the temporary IP mode (Auto/Manual), subnet mask, and gateway.

* If Data2 is 01 (Manual),

Data3 Manual IP address
Data4 Subnet mask address
Data5 Gateway address

* If Data1 is 81,

Data2 DNS address
FF: Displays the temporary DNS address.

* If Data1 is 82,

Data2 80: Applies the temporary IP mode (Auto/Manual), subnet mask, and gateway.
81: Applies the temporary DNS address
FF: Information on the current network (IP, subnet gateway and DNS)

* An example of settings,

1. Auto: sn 01 80 00
2. Manual: sn 01 80 01 010177223241 255255254000 010177222001(IP:10.177.223.241, subnet: 255.255.254.0, gateway: 10.177.222.1)
3. Network read: sn 01 80 ff
4. DNS setting: sn 01 81 156147035018 (DNS: 156.147.35.18)
5. Applying the settings: sn 01 82 80 (applies the saved IP mode (auto/manual), subnet mask, and gateway), sn 01 82 81 (applies the saved DSN)

* Each IP address contains 12 decimal digits.

Acknowledgment

(n)( )(Set ID)( )(OK/NG)(Data1)(Data)(x)

* This feature is available only for wired networks.
* This feature may not be available for all models.

51. [Power On Status] (Command: t r)

Sets the Power On status of the monitor.

Transmission

(t)(r)( )(Set ID)( )(Data)(Cr)

Data 00: [LST(Last Status)]
01: [STD(Standby)]
02: [PWR(Power On)]

Acknowledgment

(r)( )(Set ID)( )(OK/NG)(Data)(x)

52. Wired [Wake On LAN] / [Wake On LAN (Networked Standby Mode)] (Command: f w)

Selects a Wired Wake On LAN option.

Transmission

(f)(w)( )(Set ID)( )(Data)(Cr)

Data 00: [Off]
01: [On]

Acknowledgment

(w)( )(Set ID)( )(OK/NG)(Data)(x)

53. [OSD Rotation] (Command: t h)

Sets the Screen Rotation feature.

Transmission

(t)(h)( )(Set ID)( )(Data) (Cr)

Data 00: [Off]
01: 90 degrees
02: 270 degrees
03: 180 degrees

Acknowledgment

(h)( )(Set ID)( )(OK/NG)(Data)(x)

* This feature may not be available for all models.

54. [Time Sync] (Command: s n, 16)

Sets Time Sync.

Transmission
(s)(n)( )(Set ID)( )(1)(6)( )(Data)(Cr)

Data 00: [Off]
01: [On]

* This feature only works when the monitor is in Master mode.
* This feature does not work if the current time is not set.

Acknowledgment
(n)( )(Set ID)( )(OK/NG)(1)(6)(Data)(x)

* This feature may not be available for all models.

55. [Contents Sync] (Command: t g)

Sets Content Sync.

Transmission
(t)(g)( )(Set ID)( )(Data)(Cr)

Data 00: [Off]
01: [On]

Acknowledgment
(g)( )(Set ID)( )(OK/NG)(Data)(x)

* This feature may not be available for all models.

56. [LAN Daisy Chain] (Command: s n, 84)

Turns on/off LAN Daisy Chain.

Transmission
(s)(n)( )(Set ID)( )(8)(4)( )(Data)(Cr)

Data 00: [Off]
01: [On]

Acknowledgment
(n)( )(Set ID)( )(OK/NG)(8)(4)(Data)(x)

* This feature may not be available for all models.

57. [External Input Rotation] (Command: s n, 85)

Sets the External Input Rotation feature.

Transmission
(s)(n)( )(Set ID)( )(8)(5)( )(Data)(Cr)

Data 00: [Off]
01: 90 degrees
02: 270 degrees
03: 180 degrees

Acknowledgment
(n)( )(Set ID)( )(OK/NG)(8)(5)(Data)(x)

* This feature may not be available for all models.

58. [Beacon] (Command: s n, 88)

Turns on/off Beacon.

Transmission
(s)(n)( )(Set ID)( )(8)(8)( )(Data)(Cr)

Data 00: [Off]
01: [On]

Acknowledgment
(n)( )(Set ID)( )(OK/NG)(8)(8)(Data)(x)

* This feature may not be available for all models.

59. [Brightness Scheduling] Mode (Command: s m)

Selects a Brightness Scheduling mode.

Transmission
(s)(m)( )(Set ID)( )(Data)(Cr)

Data 00: [Off]
01: [On]

Acknowledgment
(m)( )(Set ID)( )(OK/NG)(Data)(x)

* This feature does not work if the current time is not set.
* This feature may not be available for all models.

60. [Brightness Scheduling] (Command: s s)

Sets Brightness Scheduling.

Transmission

(s)(s)( )(Set ID)( )(Data1)( )(Data2)( )(Data3)(Cr)

Data 1

1. f1 to f6 (data reading)
F1: Reads the 1st brightness schedule's data
F2: Reads the 2nd brightness schedule's data.
F3: Reads the 3rd brightness schedule's data.
F4: Reads the 4th brightness schedule's data.
F5: Reads the 5th brightness schedule's data.
F6: Reads the 6th brightness schedule's data.

2. FF: Reads all stored lists

3. e1 to e6 (Deletes one index), e0 (Deletes all indexes)
E0: Deletes all brightness schedules.
E1: Deletes the 1st brightness schedule.
E2: Deletes the 2nd brightness schedule.
E3: Deletes the 3rd brightness schedule.
E4: Deletes the 4th brightness schedule.
E5: Deletes the 5th brightness schedule.
E6: Deletes the 6th brightness schedule.

4. 00-17: 00 - 23 hours

Data 2 00-3B: 00 - 59 minutes

Data 3 00~64: Backlight 0 - 100

* To read or delete a brightness schedule you have set, (Data2)(Data3) must be set to FF.
* If you want to read all configured brightness schedules through FF, do not enter any values in (Data2)(Data3).
* When retrieving all items of the set Brightness Scheduling list through FF, OK will be acknowledged (ACK) even if there is no saved list.

ex1: ss 01 f1 ff ff – Reads the 1st index data in Brightness Schedule.
ex2: ss 01 ff - Reads all index data in Brightness Schedule.
ex3: ss 01 e1 ff ff – Deletes the 1st index data in Brightness Schedule.
ex4: ss 01 07 1E 46 - Adds a schedule whose time is 07:30 and whose backlight is 70.

Acknowledgement

(s)( )(Set ID)( )(OK/NG)(Data1)(Data2)(Data3)(x)

* This feature may not be available for all models.

61. [Multi Screen] Mode & Input (Command: x c)

Saves and controls Multi Screen modes and inputs.

Transmission

(x)(c)( )(Set ID)( )(Data1)( )(Data2)( )(Data3)( )(Data4)( )(Data5)( )(Cr)

Data1 (Sets MultiScreen mode)
10: PIP
22: PBP2
23: PBP3
24: PBP4
25: PBP3 (1:2:1)

Data2 (Sets the Main input of Multi screen)
Data3 (Sets the Sub1 input of Multi screen)
Data4 (Sets the Sub2 input of Multi screen)
Data5 (Sets the Sub3 input of Multi screen)
80: DVI-D
90: HDMI1
91: HDMI2
92: OPS/HDMI3/DVI-D
95: OPS/DVI-D
96: HDMI3/DVI-D
97: HDMI3/HDMI2/DVI-D
98: OPS
99: HDMI2/OPS
C0: DISPLAYPORT
C1: DISPLAYPORT/USB-C
C2: HDMI3
C3: HDBaseT

Acknowledgment

(c)( )(Set ID)( )(OK/NG)( )(Data1)(Data2)(Data3)(Data4)(Data5)(x)

* This feature may not be available for all models.
* Only the input modes supported by the model works.
* This feature operates as the last input, and supports data in DTV format.
* When the Read operation is performed, 00 is returned if it is not for an external input.

62. [Aspect Ratio] (Multi screen) (Command: x d)
Controls the aspect ratio of Multi Screen.

Transmission
(x)(d)( )(Set ID)( )(Data1)( )(Data2)(Cr)

Data1 01: Controls the Main input
02: Controls the Sub1 input
03: Controls the Sub2 input
04: Controls the Sub3 input
Data2 00: Full Screen
01: Original

Acknowledgment
(d)( )(Set ID)( )(OK/NG)(Data1)(Data2)(x)

* This feature may not be available for all models.

63. [Screen Off] (Multi screen) (Command: x e)
Turns on/off each screen in the Multi Screen.

Transmission
(x)(e)( )(Set ID)( )(Data1)( )(Data2)(Cr)

Data1 01: Controls the Main input
02: Controls the Sub1 input
03: Controls the Sub2 input
04: Controls the Sub3 input
Data2 00: Screen On
01: Screen Off

* This feature only works when the Multi Screen app is running.
* This feature does not work when there is no signal.

Acknowledgment
(e)( )(Set ID)( )(OK/NG)(Data1)(Data2)(x)

* This feature may not be available for all models.

64. [Screen Off Always] (Command: s n, 0d)
If you activate the Screen Off Always feature, the monitor enters Screen Off mode regardless of whether or not you have activated PM mode.

Transmission
(s)(n)( )(Set ID)( )(0)(d)( )(Data)(Cr)

Data 00: [Off]
01: [On]

Acknowledgment
(n)( )(Set ID)( )(OK/NG)(0)(d)(Data)(x)

* This feature may not be available for all models.

65. Stop Video (Command: k x)
Controls Stop Video.

Transmission
(k)(x)( )(Set ID)( )(Data)(Cr)

Data 00: The Stop Video feature is on.
01: The Stop Video feature is off.

* This feature only works in single input mode.

Acknowledgment
(x)( )(Set ID)( )(OK/NG)(Data)(x)

* This feature may not be available for all models.

66. Wireless [Wake On LAN] / [Wake On LAN (Networked Standby Mode)] (Command: s n, 90)
Sets the Wireless Wake-on-LAN feature.

Transmission
(s)(n)( )(Set ID)( )(9)(0)( )(Data)(Cr)

Data 00: [Off]
01: [On]

Acknowledgment
(n)( )(Set ID)( )(OK/NG)(9)(0)(Data)(x)

* This feature may not be available for all models.

67. [OSD Lock] (Command: k l)
Sets OSD Lock.

Transmission
(k)(l)( )(Set ID)( )(Data)(Cr)

Data 00: OSD Lock
01: Unlock OSD Lock

Acknowledgment
(l)( )(Set ID)( )(OK/NG)(Data)(x)

68. [HDMI IT Content] (Command: s n, 99)
Automatically sets the picture mode based on HDMI data.

Transmission
(s)(n)( )(Set ID)( )(9)(9)( )(Data)(Cr)

Data 00: [Off]
01: [On]

Acknowledgment
(n)( )(Set ID)( )(OK/NG)(9)(9)(Data)(x)

* This feature may not be available for all models.

69. [Holiday Setting] (Command: s n, 9b)

Sets holidays.

Transmission
1. (s)(n)( )(Set ID)( )(9)(b)( )
(Data1)( )(Data2)( )(Data3)( )
(Data4)( )(Data5)( )(Data6)(Cr)
2. (s)(n)( )(Set ID)( )(9)(b)( )(Data1)( )(Data2)(Cr)
3. (s)(n)( )(Set ID)( )(9)(b)( )(Data1)(Cr)

1. Setting a Holiday

Data1 Start year
00-: 2010-

Data2 Start month
01 - 0c: January - December

Data3 Start date
01 - 1F: 01-31

Data4 For how long from the start year/month/date
01-07: For 1 to 7 days

Data5 Repetition
00: None
01: Every month
02: Every Year

Data6 Repeats the schedule on a date/day-of-the-week basis.
01: On a date basis.
02: On a day-of-the-week basis.

* The minimum and maximum values for Data1 differ depending on the product's release year.
* You can input a value for [Data 6] only when a value has already been set for [Data 5] (every year or every month).

2. Checking a Schedule

Data1 Select the desired schedule.
F1: Reads the 1st schedule
F2: Reads the 2nd schedule
F3: Reads the 3rd schedule
F4: Reads the 4th schedule
F5: Reads the 5th schedule
F6: Reads the 6th schedule
F7: Reads the 7th schedule

Data2
FF

3. Deleting a Schedule

E0: Deletes all holiday schedules
E1: Deletes the 1st holiday schedule
E2: Deletes the 2nd holiday schedule
E3: Deletes the 3rd holiday schedule
E4: Deletes the 4th holiday schedule
E5: Deletes the 5th holiday schedule
E6: Deletes the 6th holiday schedule
E7: Deletes the 7th holiday schedule

* This feature does not work if the current time is not set.

Acknowledgment
1. (n)( )(Set ID)( )(OK/NG)(9)(b)
(Data1)(Data2)(Data3)(Data4)(Data5)(Data6)(x)
2. (n)( )(Set ID)( )(OK/NG)(9)(b)(f)(1~7)
(Data1)(Data2)(Data3)(Data4)(Data5)(Data6)(x)
3. (n)( )(Set ID)( )(OK/NG)(9)(b)(Data1)(x)

* This feature may not be available for all models.

70. [UPnP] (Command: s n, 9c)
Sets UPnP.mode.

Transmission
(s)(n)( )(Set ID)( )(9)(c)( )(Data)(Cr)

Data 00: [Off]
01: [On]

Acknowledgment
(n)( )(Set ID)( )(OK/NG)(9)(c)(Data)(x)

* This feature may not be available for all models.
* Changing UPnP mode results in a reboot.

71. [Home Dashboard Lock] (Command: s n, 9d)
Sets Home Dashboard Lock.

Transmission
(s)(n)( )(Set ID)( )(9)(d)( )(Data)(Cr)

Data 00: Home Dashboard Unlock
01: Home Dashboard Lock

Acknowledgment
(n)( )(Set ID)( )(OK/NG)(9)(d)(Data)(x)

* This feature may not be available for all models.

72. [USB Lock] (Command: s n, 9e)
Sets USB Lock.

Transmission
(s)(n)( )(Set ID)( )(9)(e)( )(Data)(Cr)

Data 00: USB Unlock
01: USB Lock

Acknowledgment
(n)( )(Set ID)( )(OK/NG)(9)(e)(Data)(x)

* This feature may not be available for all models.

73. [Wi-Fi Lock] (Command: s n, 9f)
Sets Wi-Fi Lock.

Transmission
(s)(n)( )(Set ID)( )(9)(f)( )(Data)(Cr)

Data 00: Wi-Fi Unlock
01: Wi-Fi Lock

Acknowledgment
(n)( )(Set ID)( )(OK/NG)(9)(f)(Data)(x)

* This feature may not be available for all models.

74. [Screen Share Lock] (Command: s n, a0)
Sets Screen Share Lock.

Transmission
(s)(n)( )(Set ID)( )(a)(0)( )(Data)(Cr)

Data 00: Screen Share Unlock
01: Screen Share Lock
02: Screen Share Lock (PIN)

Acknowledgment
(n)( )(Set ID)( )(OK/NG)(a)(0)(Data)(x)

* This feature may not be available for all models.

75. [Backup via Storage] (Command: s n, a1)

Sets Backup via Storage.

Transmission
1. (s)(n)( )(Set ID)( )(a)(1)( )(Data1)(Cr)
2. (s)(n)( )(Set ID)( )(a)(1)( )(Data1)(Data2)(Cr)

1. Disabling Backup via Storage.
Data1 00: Off

2. Setting Backup via Storage to Auto
Data1 01: Auto
Data2 01: 30 minute
02: 1 hour
03: 2 hours
04: 3 hours

3. Setting Backup via Storage to Manual
Data1 02: Manual

4. Setting Backup via Storage to SuperSign Content
Data1 03: SuperSign Contents

5. Set to SI App / Play via URL
Data 1 04: [SI App / Play via URL]

Acknowledgment
1. (n)( )(Set ID)( )(OK/NG)(a)(1)(Data1)(x)
2. (n)( )(Set ID)( )(OK/NG)(a)(1)(Data1)(Data2)(x)

* This feature may not be available for all models.

76. [Digital Audio Input] (Command: s n, a2)

Sets Digital Audio Input.

Transmission
(s)(n)( )(Set ID)( )(a)(2)( )(Data)(Cr)

Data 00: Digital
01: Analog

Acknowledgment
(n)( )(Set ID)( )(OK/NG)(a)(2)(Data)(x)

* This feature may not be available for all models.

77. [Booting Logo Image] (Command: s n, a3)

Sets Booting Logo Image.

Transmission
(s)(n)( )(Set ID)( )(a)(3)( )(Data)(Cr)

Data 00: [Off]
01: [On]

Acknowledgment
(n)( )(Set ID)( )(OK/NG)(a)(3)(Data)(x)

* This feature may not be available for all models.

78. [SoftAP] (Command: s n, a4)

Sets SoftAP Mode.

Transmission
(s)(n)( )(Set ID)( )(a)(4)( )(Data)(Cr)

Data 00: [Off]
01: [On]

Acknowledgment
(n)( )(Set ID)( )(OK/NG)(a)(4)(Data)(x)

* This feature may not be available for all models.

79. [Natural Size] (Command: s n, a5)
Sets the Natural Size feature.

Transmission
(s)(n)( )(Set ID)( )(a)(5)( )(Data)(Cr)
Data 00-64: Natural Size 0 - 100

Acknowledgment
(n)( )(Set ID)( )(OK/NG)(a)(5)(Data)(x)
* This feature may not be available for all models.

80. Play Saved Internal Media (Command: s n, a8)
Plays media files saved on internal storage. Internal storage media: videos and images stored on the monitor's internal storage after being exported via Contents Management Player.
* Not applicable: Template content, SuperSign content, and playlist content.

Transmission
(s)(n)( )(Set ID)( )(a)(8)( )(Data)(Cr)
Data 01: Play

Acknowledgment
(n)( )(Set ID)( )(OK/NG)(a)(8)( )(Data)(x)
* This feature may not be available for all models.

81. [No Signal Image] (Command: s n, a9)
Sets the No Signal Image feature.

Transmission
(s)(n)( )(Set ID)( )(a)(9)( )(Data)(Cr)
Data 00: [Off]
01: [On]

Acknowledgment
(n)( )(Set ID)( )(OK/NG)(a)(9)(Data)(x)
* This feature may not be available for all models.

82. [Audio Out] (Command: s n, aa)
Sets Audio Out to Off/Variable/Fixed.

Transmission
(s)(n)( )(Set ID)( )(a)(a)( )(Data)(Cr)
Data 00: [Off]
01: [Variable]
02: [Fixed]

Acknowledgment
(n)( )(Set ID)( )(OK/NG)(a)(a)(Data)(x)
* This feature may not be available for all models.

83. [DPM Wake Up Control] / [DPM (Standby Mode) Wake Up Control] (Command: s n, 0b)
Controls the DPM Wake Up Control settings.

Transmission
(s)(n)( )(Set ID)( )(0)(b)( )(Data)(Cr)
Data 00: [Clock]
01: [Clock+DATA]

Acknowledgment
(n)( )(Set ID)( )(OK/NG)(0)(b)(Data)(x)
* This feature may not be available for all models.

84. [Fan] Failure Check (Command: d w)
Check the fan malfunction.

Transmission
(d)(w)( )(Set ID)( )(Data)(Cr)
Data FF: Read status

Acknowledgment
(w)( )(Set ID)( )(OK/NG)(Data1)(Data2)(x)
Data1 00: Fan failure
01: Fan normal
Data2 00: 0 faults (Fan Normal)
01: 1 fault
02: 2 faults
03: 3 faults
04: 4 faults
05: 5 faults
06: 6 faults
07: 7 faults
08: 8 faults
09: 9 faults
0A: 10 faults
* This feature may not be available for all models.

85. [Apply to all inputs] (Command: s n, 52)

Apply the video mode and low value of the current input to the same video value of all inputs.

Transmission

(s)(n)( )(Set ID)( )(5)(2)( )(Data)(Cr)

Data 01: Apply

Acknowledgment

(n)( )(Set ID)( )(OK/NG)(5)(2)(Data)(x)

* This feature may not be available for all models.
* Other commands do not work for a certain time after applying.

86. [Timer Power On] Scheduling (Command: f d)

Sets On Timer settings.

Transmission

(f)(d)( )(Set ID)( )(Data1)( )(Data2)( )(Data3)(Cr)

Data1

1. f1h to f7h (data reading)

F1: Reads the 1st Timer Power On's data
F2: Reads the 2nd Timer Power On's data
F3: Reads the 3rd Timer Power On's data
F4: Reads the 4thTimer Power On's data
F5: Reads the 5th Timer Power On's data
F6: Reads the 6th Timer Power On's data
F7: Reads the 7th Timer Power On's data

2. e1h to e7h (Deletes one index), e0h (Deletes all indexes)

E0: Delete all Timer Power On's
E1: Delete the 1st Timer Power On
E2: Delete the 2nd Timer Power On
E3: Delete the 3rd Timer Power On
E4: Delete the 4th Timer Power On
E5: Delete the 5th Timer Power On
E6: Delete the 6th Timer Power On
E7: Delete the 7th Timer Power On

3. 01h to 0ch (Timer Power On days setting)

02: Repeat Daily
03: Repeat from Monday to Friday
04: Repeat from Monday to Saturday
05: Repeat from Saturday to Sunday
06: Repeat on Sunday
07: Repeat on Monday
08: Repeat on Tuesday
09: Repeat on Wednesday
0A: Repeat on Thursday
0B: Repeat on Friday
0C: Repeat on Saturday

Data2 00-17: 00 - 23 hours
Data3 00-3B: 00 - 59 minutes

* To read or delete a Timer Power On you have set, [Data2] [Data3] must be set to FF.

Example 1: fd 01 f1 ff ff - Reads the 1st index data in Timer Power On.

Example 2: fd 01 e1 ff ff - Reads the 1st index data in Timer Power On.

Example 3: fd 01 04 02 03 - Sets the Timer Power On as Monday - Saturday 02:03.

* This feature only works when Clock 1 (year/month/day) and Clock 2 (hour/minute/second) have been set.

Acknowledgment

(d)( )(Set ID)( )(OK/NG)(Data1)(Data2)(Data3)(x)

87. [Time to OFF] Scheduling (Command: f e)

Sets Off Timer settings.

Transmission

(f)(e)( )(Set ID)( )(Data1)( )(Data2)( )(Data3)(Cr)

Data1

1. f1h to f7h (data reading)

F1: Reads the 1st Timer Power Off's data
F2: Reads the 2nd Timer Power Off's data
F3: Reads the 3rd Timer Power Off's data
F4: Reads the 4th Timer Power Off's data
F5: Reads the 5th Timer Power Off's data
F6: Reads the 6th Timer Power Off's data
F7: Reads the 7th Timer Power Off's data

2. e1h to e7h (Deletes one index), e0h (Deletes all indexes)

E0: Delete all Timer Power Off's
E1: Delete the 1st Timer Power Off
E2: Delete the 2nd Timer Power Off
E3: Delete the 3rd Timer Power Off
E4: Delete the 4th Timer Power Off
E5: Delete the 5th Timer Power Off
E6: Delete the 6th Timer Power Off
E7: Delete the 7th Timer Power Off

3. 01h to 0ch (Timer Power Off days setting)

02: Repeat Daily
03: Repeat from Monday to Friday
04: Repeat from Monday to Saturday
05: Repeat from Saturday to Sunday
06: Repeat on Sunday
07: Repeat on Monday
08: Repeat on Tuesday
09: Repeat on Wednesday
0A: Repeat on Thursday
0B: Repeat on Friday
0C: Repeat on Saturday

Data2 00-17: 00 - 23 hours
Data3 00-3B: 00 - 59 minutes

* To read or delete a Timer Power Off you have set, [Data2] [Data3] must be set to FF.

Example 1: fe 01 f1 ff ff - Reads the 1st index data in Timer Power Off.
Example 2: fe 01 e1 ff ff - Reads the 1st index data in Timer Power Off.
Example 3: fe 01 04 02 03 - Sets the Timer Power Off as Monday - Saturday 02:03.

* This feature only works when Clock 1 (year/month/day) and Clock 2 (hour/minute/second) have been set.

Acknowledgment

(e)( )(Set ID)( )(OK/NG)(Data1)(Data2)(Data3)(x)

88. LCIN008 Control (Command: s n, b8)

It controls the LCIN008 device.

Transmission

(s)(n)( )(Set ID)( )(b)(8)( )(Data1)(Data2)(Cr)

Data 1 00: LCIN008 Power
01: LCIN008 Brightness

Data 2

1. For Power

0 x 00: Off
0 x 01: On

2. For Brightness

0 x ff: Read
0 x 00 ~ 0 x 64: Applies a set value

Acknowledgement

(n)( )(Set ID)( )(OK/NG)(b)(8)(Data1)(Data2)(x)

* This feature may not be available for all models.
* Other commands do not work for a certain time after applying.

89. [Transfer Control] (Command: s n, cb)

It transfers the command to RS232C out.

Transmission

(s)(n)( )(Set ID)( )(c)(b)( )(Data)(Cr)

Data Data that goes out to RS232C out

Acknowledgment

(n)( )(Set ID)( )(OK/NG)(c)(b)(Data)(x)

Data Response value of Data transferred to RS232C out

* This feature may not be available for all models.
* Other commands do not work for a certain time after applying.

90. Multichannel (Command: s n, 76)

It changes the channel.

Transmission

(s)(n)( )(Set ID)( )(7)(6)( )(Data)(Cr)

Data 01 - 09: Channel to switch to

Acknowledgment

(n)( )(Set ID)( )(OK/NG)(7)(6)(Data)(x)

* This feature may not be available for all models.

91. Change Setid (Command: j x)

Changes and checks Setid.

1. When it is a general LED model

Transmission

(j)(x)( )(Set ID)( )(Data1)( )(Data2)(Cr)

Data1 Data2 : 00 01 ~ 03 e8 (1~1000)

Acknowledgment

(x)( )(Set ID)( )(OK/NG)(Data1)(Data2)(x)

2. When it is another model (read only)

Transmission

(j)(x)( )(Set ID)( )(Data)(Cr)

Data FF: Check the value of Setid

The returned value is indicated as a value of hexadecimal numbers corresponding to the ASCII code value.

(Return when Setid is 1: x 01 OK31x

Return when Setid is 1000: x 3e8 OK31303030x)

Acknowledgment

(x)( )(Set ID)( )(OK/NG)(Data)(x)

* It works even if the Setid does not match.
* This feature may not be available for all models.

92. [Gamma] (Command: s n, ad)

Sets Gamma Mode.

Transmission

(s)(n)( )(Set ID)( )(a)(d)( )(Data)(Cr)

Data 00: [low](1.9)
01: [medium](2.2)
02: [High1](2.4)
03: [High2](BT.1886)

Acknowledgment

(n)( )(Set ID)( )(OK/NG)(a)(d)(Data)(x)

* This feature may not be available for all models.

93. [Black Level] (Command: s n, ae)

It sets the Black Level mode.

Transmission

(s)(n)( )(Set ID)( )(a)(e)( )(Data)(Cr)

Data 00: Low
01: High
02: Auto

Acknowledgment

(n)( )(Set ID)( )(OK/NG)(a)(e)(Data)(x)

* This feature may not be available for all models.

94. [UHD Deep Color] (Command: s n, af)

It sets the UHD Deep Color mode for each input.

Transmission

(s)(n)( )(Set ID)( )(a)(f)( )(Data1)( )(Data2)(Cr)

Data1 70: DVI-D
90: HDMI1
91: HDMI2
92: OPS/HDMI3/DVI-D
95: OPS/DVI-D
96: HDMI3/DVI-D
97: HDMI3/HDMI2/DVI-D
98: OPS
99: HDMI2/OPS
C0: DISPLAYPORT
C1: DISPLAYPORT/USB-C
C2: HDMI3
C3: HDBaseT

Data2 00: [Off]
01: [On]

Acknowledgment

(n)( )(Set ID)( )(OK/NG)(a)(f)(Data1)(Data2)(x)

* This feature may not be available for all models.

95. [Sync Mode] (Command: s n, b0)

Sets Sync Mode.

Transmission

(s)(n)( )(Set ID)( )(b)(0)( )(Data)(Cr)

Data 00: [Slave Mode]
01: [Master Mode]

Acknowledgment

(n)( )(Set ID)( )(OK/NG)(b)(0)(Data)(x)

* This feature may not be available for all models.

96. [Input Manager] (Command: s n, b1)

It sets labels by input.

Transmission
(s)(n)( )(Set ID)( )(b)(1)( )(Data1)( )(Data2)(Cr)

Data1 90: HDMI1
91: HDMI2
92: OPS/HDMI3/DVI-D
95: OPS/DVI-D
96: HDMI3/DVI-D
97: HDMI3/HDMI2/DVI-D
98: OPS
99: HDMI2/OPS
C0: DISPLAYPORT
C1: DISPLAYPORT/USB-C
C2: HDMI3
C3: HDBaseT

Data2 00: DTV
01: PC

Acknowledgment
(n)( )(Set ID)( )(OK/NG)(b)(1)(Data1)(Data2)(x)

* This feature may not be available for all models.

97. [PC/OPS Power Control] (Command: s n, 8b)

It sets the OPS/PC Power Control mode.

Transmission
(s)(n)( )(Set ID)( )(8)(b)( )(Data)(Cr)

Data 00: [Disable]
01: [Sync(On)]
02: [Sync(On/Off)]

Acknowledgment
(n)( )(Set ID)( )(OK/NG)(8)(b)(Data)(x)

* This feature may not be available for all models.

98. [LED Local Dimming] (Command: s n, c1)

It sets [LED Local Dimming].
(A feature to set the LED Local Dimming in a sub-item under [Settings] → [Display] → [Expert Controls])

Transmission
(s)(n)( )(Set ID)( )(c)(1)( )(Data)(Cr)

Data 00: [Off]
01: [On]

Acknowledgment
(n)( )(Set ID)( )(OK/NG)(c)(1)(Data)(x)

* This feature may not be available for all models.

99. [Scan Inversion] (Command: s n, 87)

It controls the on/off status of Scan Inversion.

Transmission
(s)(n)( )(Set ID)( )(8)(7)( )(Data)(Cr)

Data 00: Off
01: On

Acknowledgment
(n)( )(Set ID)( )(OK/NG)(8)(7)(Data)(x)

* This feature may not be available for all models.
* If you change the values on a Video Wall model, please reboot for it to work normally.

100. [Frame Control] (Command: s n, b7)

It controls the Frame Control.

Transmission
(s)(n)( )(Set ID)( )(b)(7)( )(Data)(Cr)

Data 00: Off
01: On

Acknowledgment
(n)( )(Set ID)( )(OK/NG)(b)(7)(Data)(x)

* This feature may not be available for all models.
* If you change the values on a Video Wall model, please reboot for it to work normally.

101. [Average Picture Level Auto Control] (Command: s n, be)

Sets Average Picture Level Auto Control.

Transmission
(s)(n)( )(Set ID)( )(b)(e)( )(Data)(Cr)

Data 00: [Off]
01: [On]

Acknowledgment
(n)( )(Set ID)( )(OK/NG)(b)(e)(Data)(x)

* This feature may not be available for all models.

102. Read Brightness Value (Command: m u)

Checks the brightness value.

Transmission

(m)(u)( )(Set ID)( )(FF)(Cr)

Acknowledgment

(u)()(SetID)()(OK/NG)(Data1)(Data2)(Data3)(Data4)(Data5)(Data6)(Data7)(x)

Data 1 00~64: Backlight PWM figure 0-100

Data 2 00~ff: The upper 1-byte of the value measured by the CA210.

Data 3 00~ff: The lower 1-byte of the value measured by the CA210.

The CA210 measurement is Hex: 0000~ffff, Decimal: 0 - 65535

Data 4 00~ff: The upper 1-byte of the value measured by BLU 1 Sensor.

Data 5 00~ff: The lower 1-byte of the value measured by BLU 1 Sensor

Data 6 00~ff: The upper 1-byte of the value measured by BLU 2 Sensor

Data 7 00~ff: The lower 1-byte of the value measured by BLU 2 Sensor

The BLU measurement is Hex: 0000~ffff, Decimal: 0 - 65535

* The CA210 measurement is entered as "Calibration" when the product is released from the factory. It is Default 0 before the calibration.
* This feature may not be available for all models.

103. [Screen Fault Detection] (Command: t z)

Sets the Screen Fault Detection feature.

Transmission

(t)(z)( )(Set ID)( )(Data)(Cr)

Data 00: [Off]
01: [On]

Acknowledgment

(z)( )(Set ID)( )(OK/NG)(Data)(x)

* This feature may not be available for all models.

104. [Stereo Mode] (Command: s n, c2)

Controls Stereo Mode.

Transmission

(s)(n)( )(Set ID)( )(c)(2)( )(Data)(Cr)

Data 00: Left/Right
01: Left/Left
02: Right/Right

Acknowledgment

(n)( )(Set ID)( )(OK/NG)(c)(2)(Data)(x)

* This feature may not be available for all models.

105. [HDR Picture Mode] (Command: s n, c4)

Selects a HDR Picture Mode.

Transmission

(s)(n)( )(Set ID)( )(c)(4)( )(Data)(Cr)

Data 00: Mall/QSR
01: General
02: Gov./Corp.
04: Education

Acknowledgment

(n)( )(Set ID)( )(OK/NG)(c)(4)(Data)(x)

* Depending on the model, some picture modes may not be supported.
* It works only when the HDR content is running.

106. [Dynamic Tone Mapping] (Command: s n, c5)

Selects Dynamic Tone Mapping.

Transmission

(s)(n)( )(Set ID)( )(c)(5)( )(Data)(Cr)

Data 00: [Off]
01: [On]

Acknowledgment

(n)( )(Set ID)( )(OK/NG)(c)(5)(Data)(x)

* Depending on the model, some picture modes may not be supported.
* It works only when the HDR content is running.

107. [LED Local Dimming] (Command: s n, c6)

Sets the LED Local Dimming.

(A feature to set the LED Local Dimming in a sub-item under [Settings] → [Display] → [Picture Mode] → [Picture Options])

Transmission

(s)(n)( )(Set ID)( )(c)(6)( )(Data)(Cr)

Data 00: [Off]
01: [low]
02: [Medium]
03: [High]

Acknowledgment

(n)( )(Set ID)( )(OK/NG)(c)(6)(Data)(x)

* This feature may not be available for all models.

108. [USB2 to HDBaseT] (Command: s n, c3)
Sets USB2 to HDBaseT.

Transmission
(s)(n)( )(Set ID)( )(c)(3)( )(Data)(Cr)

Data 00: [Off]
01: [On]

Acknowledgment
(n)( )(Set ID)( )(OK/NG)(c)(3)(Data)(x)

* This feature may not be available for all models.

109. [Change Password] (Command: s n, a7)
Changes password.

Transmission
(s)(n)( )(Set ID)( )(a)(7)( )(Data1)(Data2)(Data3)
(Data4)(Data5)(Data6)( )(Data7)(Data8)(Data9)
(Data10)(Data11)(Data12)(Cr)

Data 1~6 : 0~9(Previously set password)
Data 7~12 : 0~9(New password)

Acknowledgement
(n)( )(Set ID)( )(OK/NG)(a)(7)( )(Data1)(Data2)(Data3)
(Data4)(Data5)(Data6)( )(Data7)(Data8)(Data9)
(Data10)(Data11)(Data12)(x)

* This feature may not be available for all models.

110. [Brightness Range Adjustment] (Command: s n, ab)
Adjust the brightness range.

Transmission
(s)(n)( )(Set ID)( )(a)(b)( )(Data1)( )(Data2)(Cr)

Data 1 00: Minimum brightness control
01: Maximum brightness control
Data 1 00~64: Range control

Acknowledgement
(n)( )(Set ID)( )(OK/NG)(a)(b)(Data1)(Data2)(x)

* This feature may not be available for all models.
* Data2 only supports Hex values that are multiples of 5.
* The range of minimum brightness value cannot exceed the range of maximum brightness, and the range of maximum brightness value cannot be less than the range of minimum brightness.

111. [Color Calibration] (Command: s n, d6)
Selects Colour Calibration.

Transmission
(s)(n)( )(Set ID)( )(d)(6)( )(Data)(Cr)

Data 00: Off
01: On

Acknowledgement
(n)( )(Set ID)( )(OK/NG)(d)(6)(Data)(x)

* It may not be supported depending on the model.

112. [Quiet Mode] (Command: s n, c7)
Selects Quiet Mode.

Transmission
(s)(n)( )(Set ID)( )(c)(7)( )(Data)(Cr)

Data 00: Off
01: On

Acknowledgement
(n)( )(Set ID)( )(OK/NG)(c)(7)(Data)(x)

* It may not be supported depending on the model.

113. Automatic adjustment (Command: j u)

Automatically adjusts image location and shake. (Only be executed in RGB-PC input mode.)

Transmission
(j)(u)( )(Set ID)( )(Data)(Cr)
Data 01: On

Acknowledgement
(u)( )(Set ID)( )(OK/NG)(Data)(x)

* It may not be supported depending on the model.

114. Horizontal location (Command: f q)

Adjust the screen horizontal location. (Only be executed in RGB-PC input mode.)

* However, the operating range varies depending on the RGB input resolution.

Transmission
(f)(q)( )(Set ID)( )(Data)(Cr)
Data 00~64: Min -50 (Left) ~ Max 50 (Right)

Acknowledgement
(q)( )(Set ID)( )(OK/NG)(Data)(x)

* It may not be supported depending on the model.

115. Vertical location (Command: f r)

Adjust the screen vertical location. (Only be executed in RGB-PC input mode.)

* However, the operating range varies depending on the RGB input resolution.

Transmission
(f)(r)( )(Set ID)( )(Data)(Cr)
Data 00~64: Min -50 (Down) ~ Max 50 (Up)

Acknowledgement
(r)( )(Set ID)( )(OK/NG)(Data)(x)

* It may not be supported depending on the model.

116. Horizontal Size (Command: f s)

Adjust the screen horizontal Size. (Only be executed in RGB-PC input mode.)

* However, the operating range varies depending on the RGB input resolution.

Transmission
(f)(s)( )(Set ID)( )(Data)(Cr)
Data 00~64: Min -50 (Reduce) ~ Max 50 (Enlarge)

Acknowledgement
(s)( )(Set ID)( )(OK/NG)(Data)(x)

* It may not be supported depending on the model.

117. Intelligent Auto (Command: t i)

Select Intelligent Auto settings.

Transmission
(t)(i)( )(Set ID)( )(Data)(Cr)
Data 00: Off
01: On

Acknowledgement
(i)( )(Set ID)( )(OK/NG)(Data)(x)

* It may not be supported depending on the model.

118. [Genlock] (Command: s n, dc)

Adjusts the Gen Lock On/Off.

Transmission
(s)(n)( )(Set ID)( )(d)(c)( )(Data)(Cr)
Data 00: Off
01: On

Acknowledgement
(n)( )(Set ID)( )(OK/NG)(d)(c)(Data)(x)

* It may not be supported depending on the model.

119. [Vectorscope] On/Off (Command: s n, e7)
Adjusts the Vectorscope On/Off.

Transmission
(s)(n)( )(Set ID)( )(e)(7)( )(Data)(Cr)

Data 00: Off
01: On

Acknowledgement
(n)( )(Set ID)( )(OK/NG)(e)(7)(Data)(x)

* It may not be supported depending on the model.

120. [Waveform] On/Off (Command: s n, e8)
Adjusts the Waveform On/Off.

Transmission
(s)(n)( )(Set ID)( )(e)(8)( )(Data)(Cr)

Data 00: Off
01: On

Acknowledgement
(n)( )(Set ID)( )(OK/NG)(e)(8)(Data)(x)

* It may not be supported depending on the model.

121. False Color Mode (Command: s n, e9)
Sets the False Color Mode.

Transmission
(s)(n)( )(Set ID)( )(e)(9)( )(Data)(Cr)

Data 00: Off
01: Run the Zebra Pattern
02 : Run the Color Pattern

Acknowledgement
(n)( )(Set ID)( )(OK/NG)(e)(9)(Data)(x)

* It may not be supported depending on the model.

122. False Color – Zebra (Command: s n, ea)
Sets the False Color and Zebra Pattern.

Transmission
(s)(n)( )(Set ID)( )(e)(a)( )(Data)(Cr)

Data 00~64: Zebra pattern 0~100

Acknowledgement
(n)( )(Set ID)( )(OK/NG)(e)(a)(Data)(x)

* It may not be supported depending on the model.

123. False Color – Color (Command: s n, eb)
Sets the False Color and Color Pattern.

Transmission
(s)(n)( )(Set ID)( )(e)(b)( )(Data)(Cr)

Data 00~64: Color pattern 0~100

Acknowledgement
(n)( )(Set ID)( )(OK/NG)(e)(b)(Data)(x)

* It may not be supported depending on the model.

124. SDR/HDR Signal Format (Command: s n, ec)
Sets the SDR/HDR Signal Format.

Transmission
(s)(n)( )(Set ID)( )(e)(c)( )(Data)(Cr)

Data 00: Auto
01: SDR
02: HDR

Acknowledgement
(n)( )(Set ID)( )(OK/NG)(e)(c)(Data)(x)

* It may not be supported depending on the model.

125. HDR EOTF (Command: s n, ed)

Sets the HDR EOTF.

Transmission

(s)(n)( )(Set ID)( )(e)(d)( )(Data)(Cr)

Data 00: Auto
01: PQ100
02: PQ200
03: PQ300
04: PQ400
05: PQ500
06: PQ600
07: PQ700
08: PQ800
09: PQ900
0A: PQ1000
0B: PQ2000
0C: PQ4000
0D: PQ10000
0E: HLG

Acknowledgement

(n)( )(Set ID)( )(OK/NG)(e)(b)(Data)(x)

* It may not be supported depending on the model.

126. [Phase Shift] (Command: s n, ee)

Sets the Phase Shift.

Transmission

(s)(n)( )(Set ID)( )(e)(e)( )(Data)(Cr)

Data 0000~0168: Shift 0~360

Acknowledgement

(n)( )(Set ID)( )(OK/NG)(e)(b)(Data)(x)

* It may not be supported depending on the model.

REMOTE CONTROL

The descriptions in this manual are based on the buttons on the remote control. Please read this manual carefully to use the monitor correctly. To install batteries, open the battery cover, place batteries (1.5 V AAA) matching ⊕ and ⊖ terminals to the labels inside the compartment, and close the battery cover. To remove the batteries, perform the installation actions in reverse. The illustrations may differ from the actual accessories.

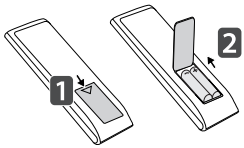

⚠ CAUTION

- Do not mix old and new batteries, as this may damage the remote control.
- Ensure the remote control is always pointed toward the monitor's IR receiver.
- Some features of the remote control may not be supported in certain models.
- The product's internal and external batteries should not be exposed to excessive heat such as direct sunlight, fire, or the like.

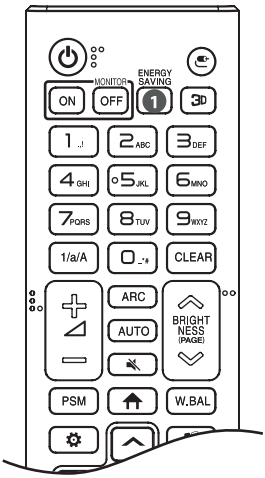

(POWER) Turns the monitor on or off.

MONITOR ON Turns the monitor on.

MONITOR OFF Turns the monitor off.

1 ENERGY SAVING Adjusts the brightness of the picture to reduce energy consumption.

(INPUT) Selects the input mode.

3D The function is not supported in this model.

Number and Alphabet buttons Enters numerical or alphabetical characters depending upon the setting.

1/a/A Toggles between numerical and alphabetical.

CLEAR Deletes the entered numerical or alphabetical character.

(Volume Up/Down Button) Adjusts the volume.

ARC Selects the Aspect Ratio mode.

AUTO Automatically adjusts picture position and minimizes image instability (available for RGB input only).

(MUTE) Mutes all sounds.

BRIGHTNESS Adjusts the brightness of the display.

PAGE The function is not supported in this model.

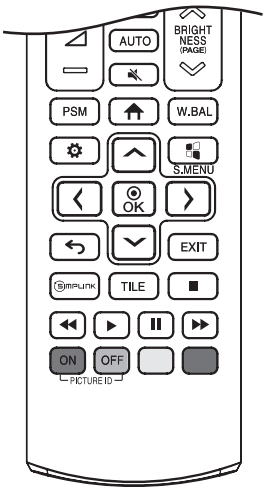

PSM Selects the Picture Mode.

(HOME) Activates the Launcher.

W.BAL Enters the White Balance menu.

(SETTINGS) Accesses the main menus or saves your input and exit menus.

S.MENU SuperSign menu key.

(Navigation Buttons) Scrolls through menus or options.

OK Selects menus or options and confirms your input.

(BACK) Allows you to move back one step in the user interaction function.

EXIT Quit all OSD tasks and applications.

SIMPLINK Allows you to control various multimedia devices to enjoy multimedia simply by using the remote control through the SimpLink menu.

TILE Selects the TILE Mode.

PICTURE ID ON/OFF When the Picture ID number matches the Set ID number, you can control whichever monitor you want in multi-display format.

(USB Menu Control Buttons) Controls media playback. (May not be supported on some models.)

MAKING CONNECTIONS

Connecting with LAN Cable

Connect the LAN cable with the set.

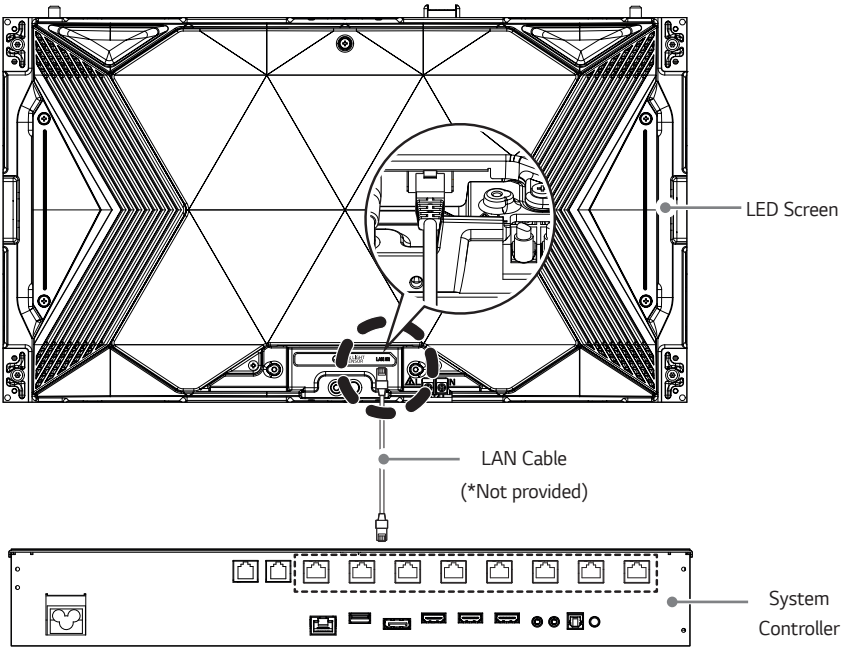

System Controller	LED Screen
CSAB-0072	LSAB007-M2, LSAB007-Q2, LSAB007-N2, LSAB007-U2

⚠ CAUTION

- Check the direction so that the LAN cable is not damaged.
- Inserting the LAN cable with excessive force may damage the contact point.
- The LAN IN port is for the administrator.

Connecting to PC

System Controller	LED Screen
CSAB-0072	LSAB007-M2, LSAB007-Q2, LSAB007-N2, LSAB007-U2, LSAB007-S2, LSAB007-T2

- The System Controller model itself does not have any screen. You can use the screen by connecting it to the LED Screen model.
- System Controller supports the Plug and Play[1] feature.

[1] Plug and Play: a feature that enables a PC to recognize devices attached by the user without device configuration or user intervention when powering up.

Connecting to External Devices

Connect a HD receiver, DVD, or VCR player to the product and select an appropriate input mode.
For the best picture quality, use a HDMI cable to connect the product to external devices.

NOTE

- For the best image quality using a HDMI connection is recommended.
- To comply with the specifications of the product, use a shielded interface HDMI cable with a ferrite core.
- Fasten the cables with cable ties to minimize electromagnetic interference.
- Use a High Speed HDMI®/™ cable.
- If you want to use HDMI-PC mode, you must set your input to PC mode.
- You may experience compatibility issues if you use a HDMI cable to connect to a PC.
- Use a certified cable that displays the HDMI logo. The screen may not appear or a connection error could occur if a non-certified cable is used.
- Recommended HDMI Cable Types
  - High Speed HDMI®/™ Cable
  - High Speed HDMI®/™ Ethernet Cable

CAUTION

- Connect the signal input cable and check whether it is inserted properly into the connector.
- If you are using a DP to HDMI dongle, use products that have been verified by graphics card manufacturers.
- If you are connecting the graphics card to multiple-channel ports, use the same DP to HDMI dongle model.

Using the Input List

(HOME) →
- HDMI 1 → HDMI 2 → HDMI 3 → DISPLAYPORT

Connecting Multiple Monitors

To use multiple products, first connect an external device to the product, connect one end of the supported signal input cable to the OUT connector of the product, and then connect the other end to the IN connector of the product you wish to connect to.

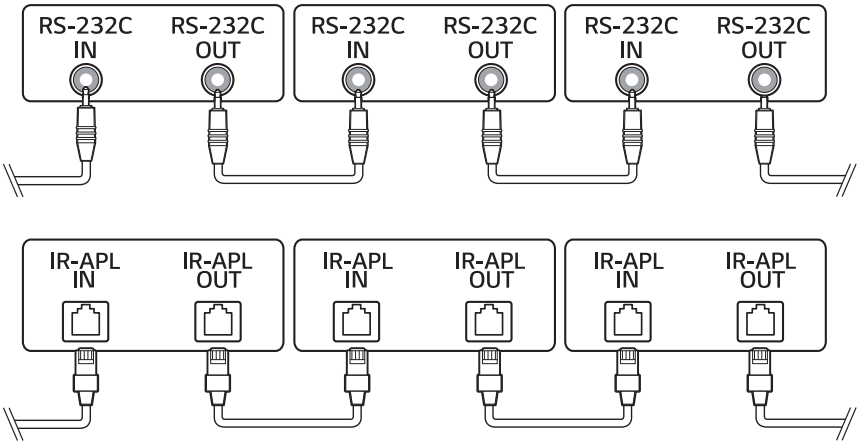

NOTE

- Daisy chaining the video output may be limited depending on the performance of the input device that supports HDCP.

CONNECT A USB DEVICE

Connect a USB storage device, such as a USB flash memory to the display device to use multimedia features.

⚠ CAUTION

- Do not turn the Device off or remove the USB storage device when the multimedia screen is activated. This may cause the loss of a file or damage to a USB storage device.
- Back up your files saved on a USB storage device frequently, as you may lose or damage the files and this may be not covered by the warranty.
- Devices using a power source such as a USB HDD are not supported.
- For USB 3.0 devices, compatibility is not guaranteed.

Tips for Using USB Devices

- Only USB storage devices are recognised.
- A USB storage device using an automatic recognition program may not be recognised.
- A USB storage device which uses its own driver may not be recognised.
- The recognition speed of a USB storage device may depend on each device.
- Please do not turn off the display or unplug the USB device when the connected USB storage device is working. When such a device is suddenly disconnected or unplugged, the stored files or the USB storage device may be damaged.
- Please do not connect USB storage devices which were artificially created on the PC. The device may cause the product to malfunction or fail to play.
- Storage devices formatted with utility programs that are not supported by Windows may not be recognised.
- Please connect power to a USB storage device (over 0.5 A) which requires an external power supply. Otherwise, the device may not be recognised.
- Please connect a USB storage device with the cable offered by the device maker.
- Some USB storage devices may not be supported or operated smoothly.
- The file arrangement method for USB storage devices is similar to that of Windows, and file names can be recognised up to 100 English characters.
- Be sure to back up important files since data stored in a USB memory device may be damaged. We will not be responsible for any data loss.
- If your USB storage device has multiple partitions, or if you use a USB multi-card reader, you can use up to four partitions or USB memory devices.
- If a USB storage device is connected to a USB multi-card reader, its volume data may not be detected.
- If the USB storage device does not work properly, remove it and connect it again.
- The speed at which a USB storage device is detected differs from device to device.
- The recommended capacity is 32 GB or less for a USB memory drive.
- Any device with more than the recommended capacity may not work properly.
- USB storage devices (USB 2.0 or below) are also supported.
- The exFAT file system may not work properly for USB storage devices.

TROUBLESHOOTING

No image is displayed.

- Is the power cord connected to the product?
  - Check if the power cord is correctly plugged into the power outlet.

The 'Unknown Product' message appears when the product is connected.

- Did you install the driver?
  - Check if the Plug and Play function is supported by referring to the graphics card user manual.

The screen image looks abnormal.

- Is the screen position wrong?
  - Check if the graphics card resolution and frequency are supported by the product. If the frequency is out of range, set to the recommended resolution in the "Display" settings in Control Panel.
- The screen is displayed abnormally.
  - The proper input source is not connected to the port. Connect a cable that matches the input source signal.

The display colour is abnormal.

- Screen has poor colour resolution (16 colours).
  - Set the colour depth to more than 24 bits (true colour). To do this, select (Control Panel) → (Display) → (Setting) → (Colour Palette) on Windows. (May differ depending on your operating system (OS).)
- Screen colour is unstable or mono-coloured.
  - Check the connection status of the signal cable. Or, re-insert the PC graphics card.

The operation does not work normally.

- The power suddenly turned off.
  - Is the Timer set?
  - Check the power control settings. Power supply is interrupted.

PRODUCT SPECIFICATIONS

Without prior notice, all product information and specifications contained in this manual are subject to change to improve the performance of the product.

The ~ symbol means alternating current, and the symbol ⎓ means direct current.

Video Signal	Max Resolution	HDMI/DisplayPort: 3840 x 2160 @ 60 Hz - This may not be supported on some OS or graphics card types.
	Recommended Resolution	HDMI/DisplayPort: 3840 x 2160 @ 60 Hz - This may not be supported on some OS or graphics card types.
	Horizontal Frequency	HDMI/DisplayPort: 30 kHz to 135 kHz
	Vertical Frequency	HDMI/DisplayPort: 30 Hz to 60.31 Hz
	Synchronization	Separate Sync/Digital
Input/Output Ports		IR-APL IN/OUT, LAN-01 ~ LAN-08, LAN IN, USB 2.0 IN, DP IN, HDMI IN 1, HDMI IN 2, HDMI IN 3, RS-232C IN/OUT, OPTIC OUT, IR & LIGHT SENSOR IN, AC IN
Power	Rated Voltage	100-240 V~ 50/60 Hz 0.8 A
	Power Consumption	On Mode: 60 W (Max) Standby Mode: ≤ 0.5 W
Embedded Battery		Applied
Environmental Conditions	Operating Temperature	0 °C to 40 °C
	Operating Humidity	10 % to 80 %
	Storage Temperature	-20 °C to 60 °C
	Storage Humidity	5 % to 85 %
Dimensions (Width x Depth x Height) / Weight		446 mm x 290 mm x 63 mm / 4.5 kg

Wireless module(LGSBWAC72) Specifications	
Wireless LAN (IEEE 802.11a/b/g/n/ac)	
Frequency range (MHz)	**Output power (Max.) (dBm)**
2400 to 2483.5	14
5150 to 5725	16.5
5725 to 5850 (Not for EU)	11.5

- As band channels can vary per country, the user cannot change or adjust the operating frequency. This product is configured for the regional frequency table.
- For consideration of the user, this device should be installed and operated with a minimum distance of 20 cm between the device and the body.
- "IEEE 802.11ac" is not available in all countries.

(Only Nigeria)

Connection and use of this communications equipment is permitted by the Nigerian Communications Commission

(Only HongKong)

Wireless module(LGSBWAC72) Specifications	
Wireless LAN (IEEE 802.11a/b/g/n/ac)	
Frequency range (MHz)	**Output power (Max.) (dBm)**
2400 to 2483.5	14
5150 to 5350	16.5
5725 to 5850	11.5

- As band channels can vary per country, the user cannot change or adjust the operating frequency. This product is configured for the regional frequency table.
- For consideration of the user, this device should be installed and operated with a minimum distance of 20 cm between the device and the body.

(Unit: mm)

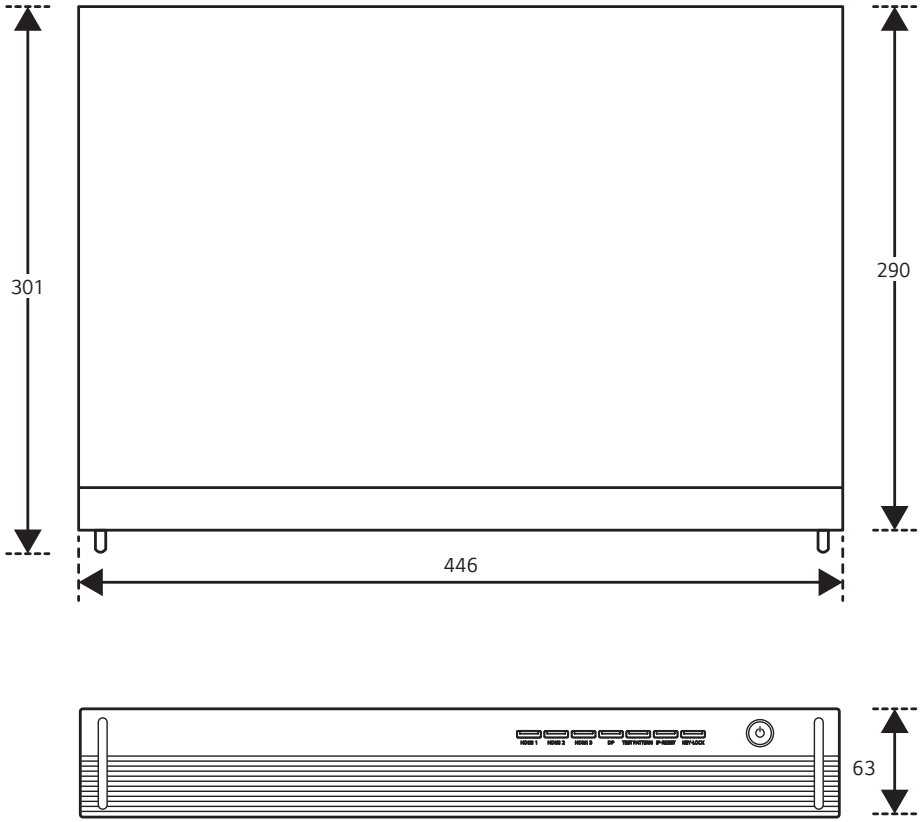

HDMI 1,2,3/DisplayPort (PC) Support Mode

Resolution	Horizontal Frequency (kHz)	Vertical Frequency (Hz)
800 x 600	37.879	60.317
1024 x 768	48.363	60.0
1280 x 720	44.772	59.855
1280 x 1024	63.981	60.02
1680 x 1050	65.290	59.954
1920 x 1080	67.5	60
3840 x 2160	67.5	30
3840 x 2160	135	60

HDMI 1,2,3/DisplayPort (DTV) Support Mode

Resolution	Horizontal Frequency (kHz)	Vertical Frequency (Hz)
480/60p	31.5	60
576/50p	31.25	50
720/50p	37.5	50
720/60p	45	60
1080/50i	28.1	50
1080/60i	33.75	60
1080/50p	56.25	50
1080/60p	67.432	59.94
1080/60p	67.5	60
2160/30p	67.5	30
2160/50p	112.5	50
2160/60p	135	60
2160/24p	54	24
2160/25p	56.25	25

NOTE

- Horizontal Frequency: The horizontal interval is the time taken to display one horizontal line. When one horizontal line is divided by the horizontal interval, the number of horizontal lines displayed every second is the horizontal frequency. The unit is kHz.
- Vertical Frequency: The monitor screen functions by the screen image changing dozens of times every second like a fluorescent lamp. The vertical frequency or refresh rate is the number of image displays per second. The unit is Hz.

LICENSES

Supported licenses may differ by model. For more information of the licenses, visit *www.lg.com*.

The terms HDMI, HDMI High-Definition Multimedia Interface, HDMI trade dress and the HDMI Logos are trademarks or registered trademarks of HDMI Licensing Administrator, Inc.

Manufactured under license from Dolby Laboratories. Dolby, Dolby Vision, Dolby Vision IQ, Dolby Audio, Dolby Atmos, and the double-D symbol are trademarks of Dolby Laboratories Licensing Corporation.

For DTS patents, see *http://patents.dts.com*. Manufactured under license from DTS Licensing Limited. DTS, the Symbol, & DTS and the Symbol together, DTS 2.0 Channel, DTS 2.0+Digital Out, DTS-HD, and DTS Virtual:X are registered trademarks or trademarks of DTS, Inc. in the United States and/or other countries. © DTS, Inc. All Rights Reserved.

The Bluetooth® word mark and logos are registered trademarks owned by Bluetooth SIG, Inc. and any use of such marks by LG Electronics Inc. is under license. Other trademarks and trade names are those of their respective owners.

The model and serial number of the product are located on the back and on one side of the product. Record them below in case you ever need service.

MODEL

SERIAL NO.

Temporary noise is normal when powering ON or OFF this device.