GeoVision inc
The Vision of Security

Quick Start Guide

GV-Cloud IP Camera

- **GV-GBL4900 / GBL4911**
- **GV-GDR4900**
- **GV-GEB4900**
- **GV-GEBF4911**
- **GV-GFER6900**
- **GV-GVD4910**

Before attempting to connect or operate this product,
please read these instructions carefully and save this manual for future use.

GSERIES-QG-D

© 2024 GeoVision, Inc. All rights reserved.
Under the copyright laws, this manual may not be copied, in whole or in part, without the written consent of GeoVision.

Every effort has been made to ensure that the information in this manual is accurate. GeoVision, Inc. makes no expressed or implied warranty of any kind and assumes no responsibility for errors or omissions. No liability is assumed for incidental or consequential damages arising from the use of the information or products contained herein. Features and specifications are subject to change without notice.

GeoVision, Inc.
9F, No. 246, Sec. 1, Neihu Rd.,
Neihu District, Taipei, Taiwan
Tel: +886-2-8797-8377
Fax: +886-2-8797-8335
http://www.geovision.com.tw

Trademarks used in this manual: *GeoVision*, the *GeoVision* logo and GV series products are trademarks of GeoVision, Inc. *Windows* is the registered trademark of Microsoft Corporation.

December 2024

Scan the following QR codes for product warranty and technical support policy:

[Warranty] **[Technical Support Policy]**

Warning and Caution

- If the product does not work properly, contact your dealer or the nearest service center. Never attempt to disassemble the camera yourself. (We shall not be responsible for any problems caused by unauthorized repair or maintenance.)
- Keep away from liquid while use.
- In the use of the product, you must be strict compliance with the electrical safety regulations of the nation and region. When the product is mounted on wall, the device shall be firmly fixed.
- Do not use camera beyond specified voltage range.
- Do not drop the camera or subject it to physical shock.
- Avoid touching the camera lens.
- If cleaning is necessary, use clean cloth to wipe it gently.
- Do not aim the camera at the sun or extra bright place.
- Do not place the camera in extremely hot, cold, dusty or damp locations, and do not expose it to high electromagnetic radiation.
- To avoid heat accumulation, good ventilation is required for operating environment.

Contents

1. Overview 1

1.1 GV-GBL4900 1

1.2 GV-GBL4911 4

1.3 GV-GDR4900 7

1.4 GV-GEB4900 10

1.5 GV-GEBF4911 12

1.6 GV-GFER6900 14

1.7 GV-GVD4910 17

2. Installation 17

2.1 GV-GBL4900 17

2.2 GV-GBL4911 19

2.3 GV-GDR4900 22

2.4 GV-GEB4900 25

2.5 GV-GEBF4911 29

2.6 GV-GFER6900 33

2.7 GV-GVD4910 35

3. Accessing the Network Camera 36

3.1 Looking Up the Dynamic IP Address 36

3.2 Configuring the IP Address 38

4. The Web Interface 41

5. Upgrading System Firmware 44

6. Restoring to Factory Default 47

7. Connecting to GV-Cloud VMS 49

8. Connecting to GV-Center V2 52

1. Overview

1.1 GV-GBL4900

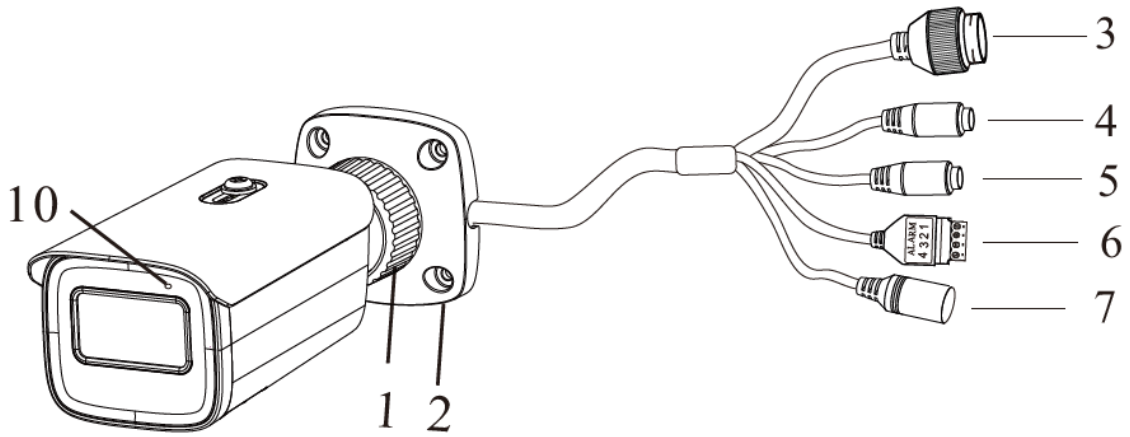

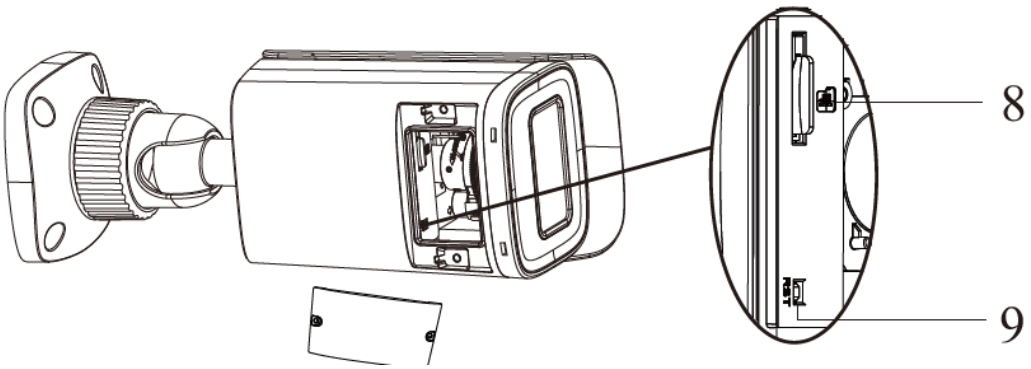

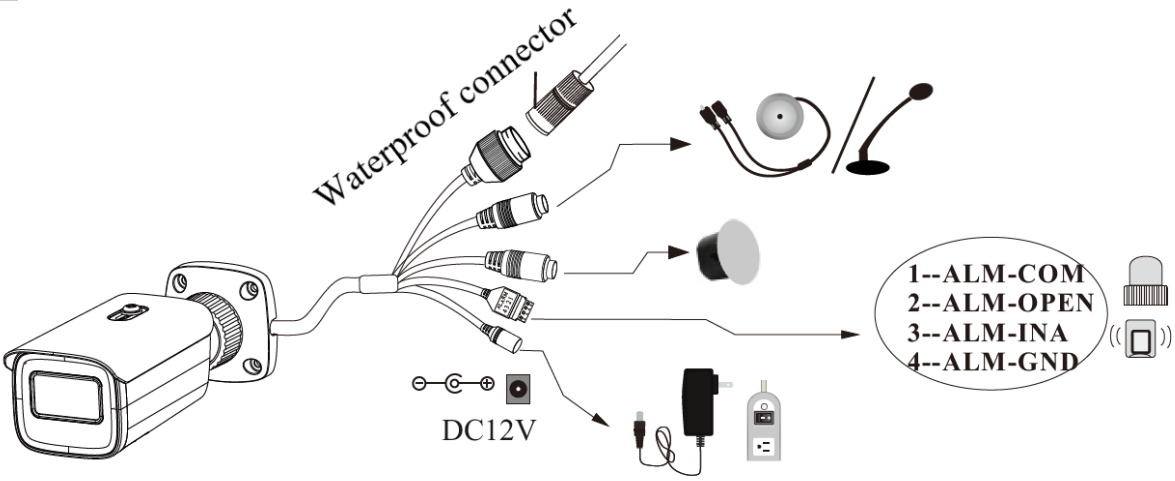

1	Adjusting ring	7	Power connector (DC 12V)
2	Mounting base	8	microSD card slot
3	Ethernet connector (PoE)	9	Default button
4	MIC-Audio input connector	10	Microphone
5	HP-Audio output connector	11	IR LED x 2
6	Alarm input/output		

Note:

1. It is recommended to install the waterproof connector for outdoor installation.
2. This series can be powered by DC 12V / PoE power supply. If the PoE switch is used to power the camera, DC 12V power supply is not required.
3. To load default settings, press and hold the default button for 10 seconds.

Connecting Alarm Input / Output

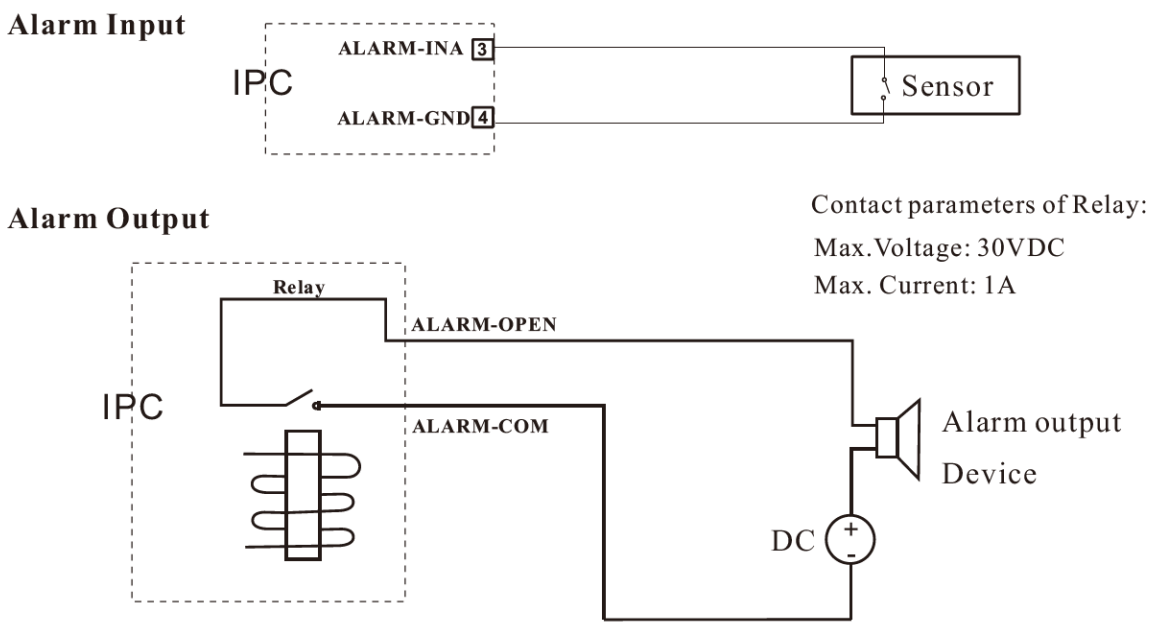

Connecting Network Cable

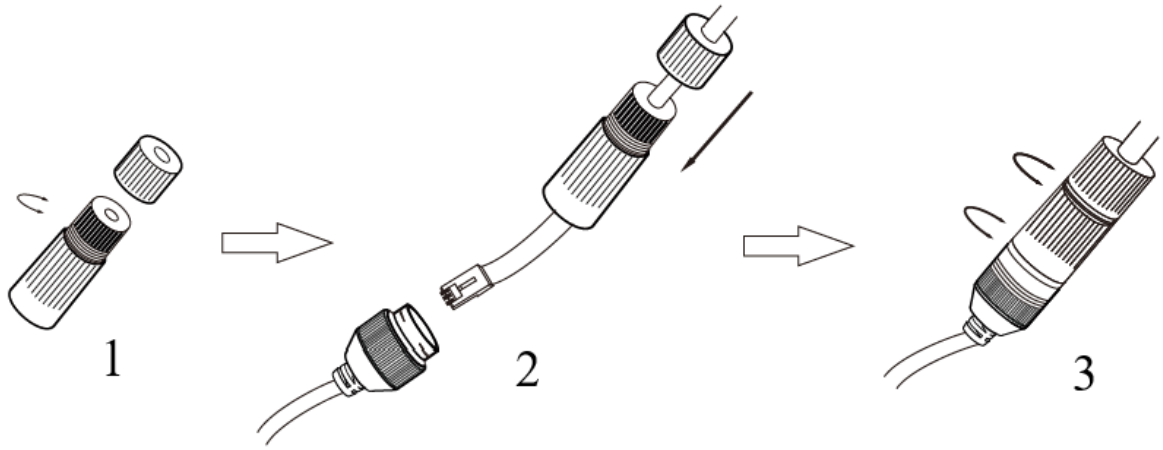

1. Loosen the nut from the main element.
2. Run the network cable (without RJ 45 connector) through the both elements. Then crimp the cable with RJ 45 connector.
3. Connect the cable to the Ethernet connector. Then tighten the nut and the main cover.

1.2 GV-GBL4911

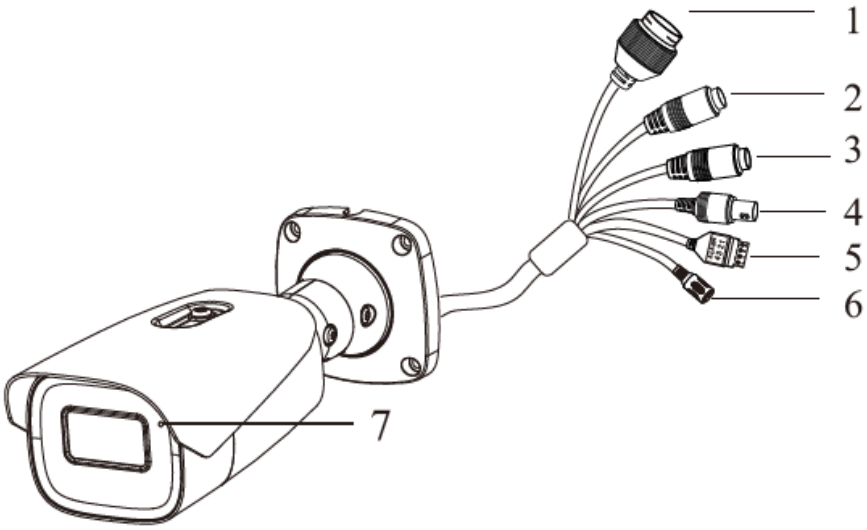

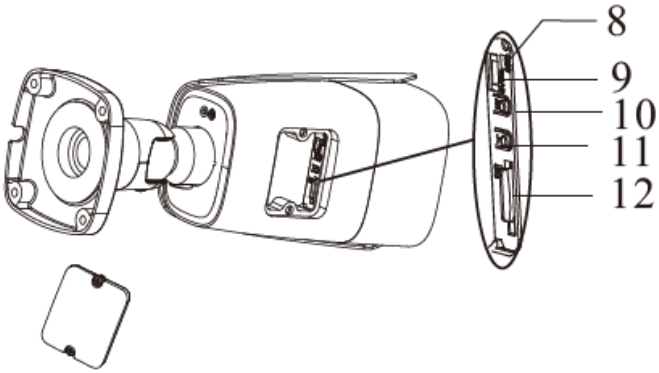

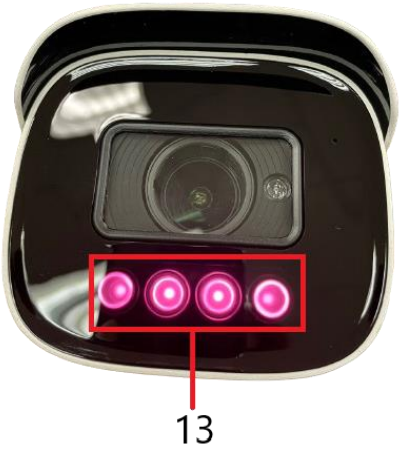

1	Ethernet connector (PoE)	8	Default button
2	MIC-Audio input connector	9	DC IN & CVBS Interface
3	HP-Audio output connector	10	Zoom -
4	CVBS Video Output	11	Zoom +
5	Alarm input/output	12	microSD card slot
6	Power connector (DC 12V)	13	IR LED x 4 (the 2 LED lights in the middle will be on at long shots)
7	Microphone		

Note:

1. It is recommended to install the waterproof connector for outdoor installation.
2. This series can be powered by DC 12V / PoE power supply. If the PoE switch is used to power the camera, DC 12V power supply is not required.
3. To load default settings, press and hold the default button for 10 seconds.

Alarm Connection

Alarm input: Join the grounding ends of the sensor and the camera and then connect the signal cable of the sensor to the alarm input port of the camera.

Alarm output: Loosen the screws in the alarm output port. Then insert the signal wires of the alarm output devices into the port of COM and OPEN separately. Finally tighten the screws. Some of the external alarm output devices need the power supply.

Connecting Network Cable

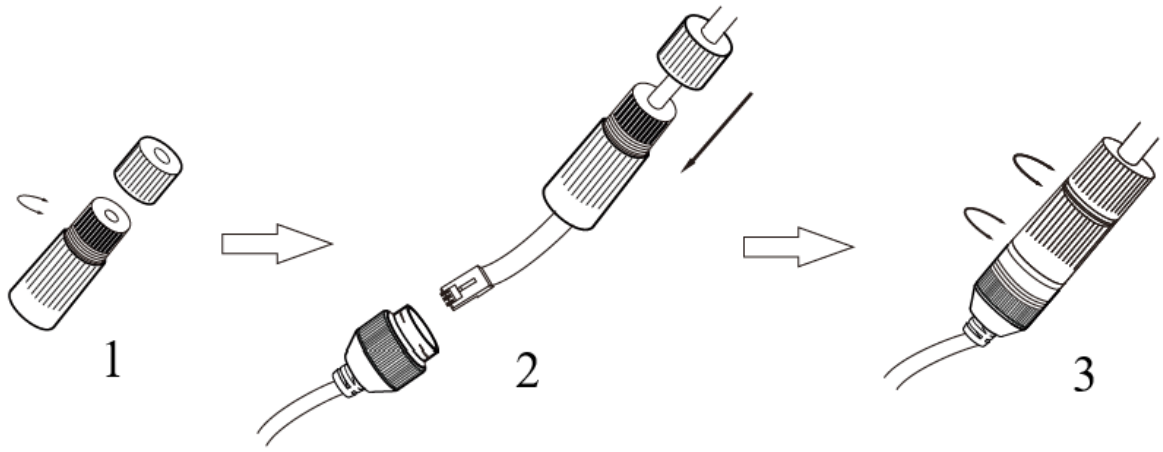

1. Loosen the nut from the main element.
2. Run the network cable (without RJ 45 connector) through the both elements. Then crimp the cable with RJ 45 connector.
3. Connect the cable to the Ethernet connector. Then tighten the nut and the main cover.

1.3 GV-GDR4900

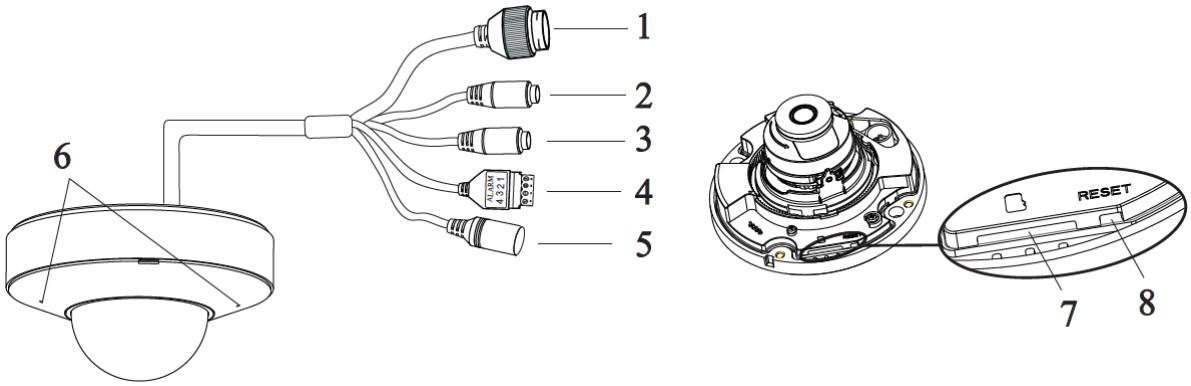

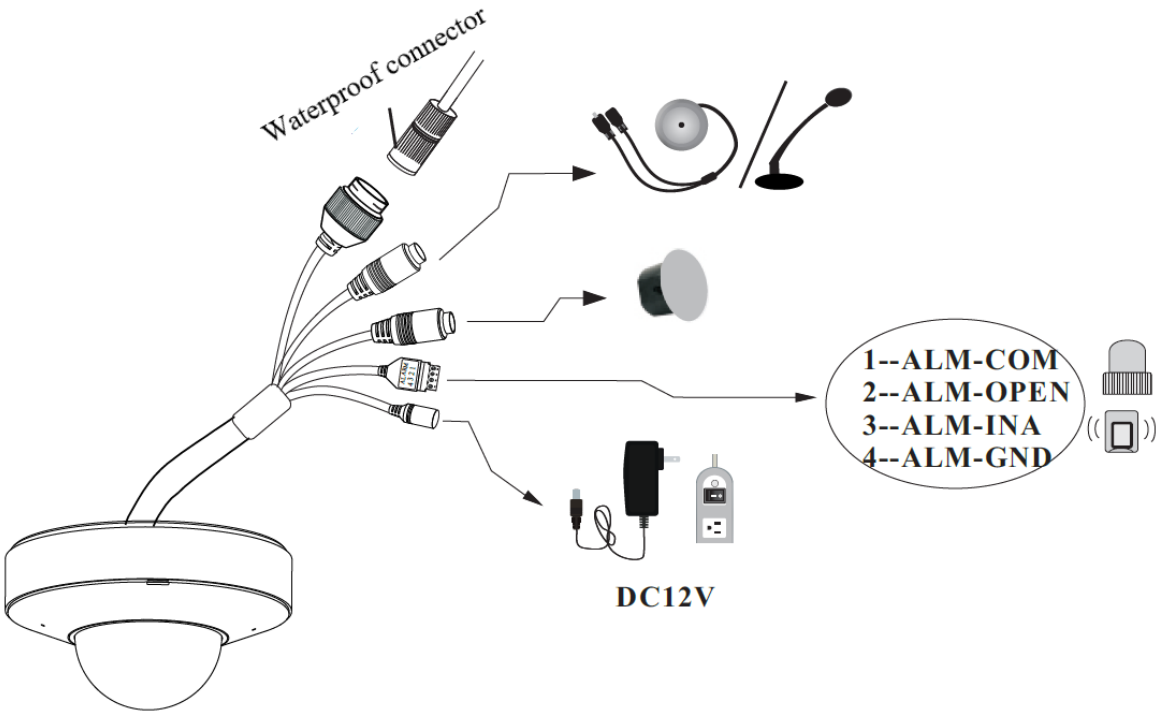

1	Ethernet connector (PoE)	6	Microphone
2	MIC-Audio input connector	7	microSD card slot
3	HP-Audio output connector	8	Default button
4	Alarm input/output	9	IR LED x 2
5	Power connector (DC 12V)		

Note:

1. It is recommended to install the waterproof connector for outdoor installation.
2. This series can be powered by DC 12V / PoE power supply. If the PoE switch is used to power the camera, DC 12V power supply is not required.
3. To load default settings, press and hold the default button for 10 seconds.
4. Make sure the camera's lower dome is properly secured in case of microphone operation failure.

Connecting Alarm Input / Output

Alarm Input

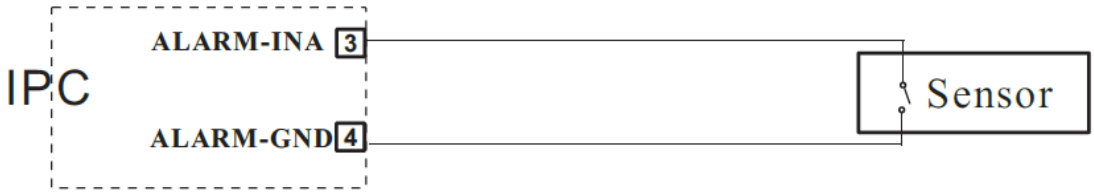

Alarm Output

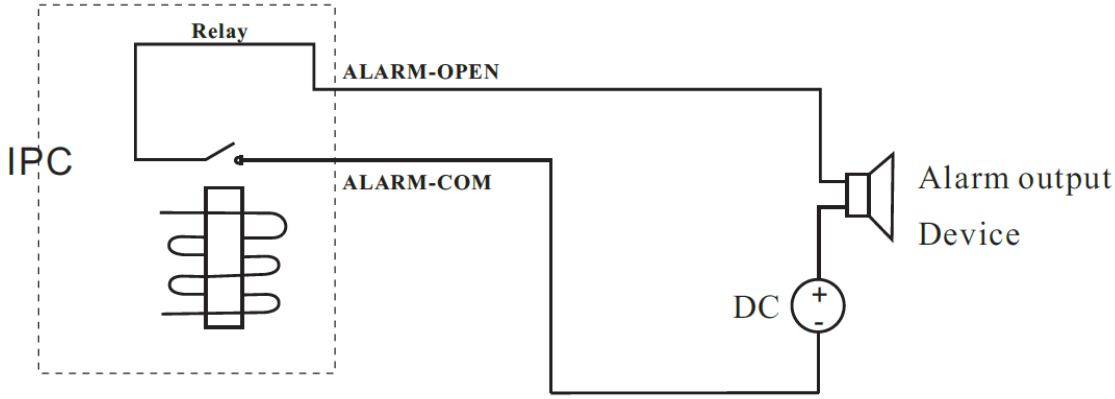

Contact parameters of Relay:

Max. Voltage: DC 30V

Max. Current: 1A

1.4 GV-GEB4900

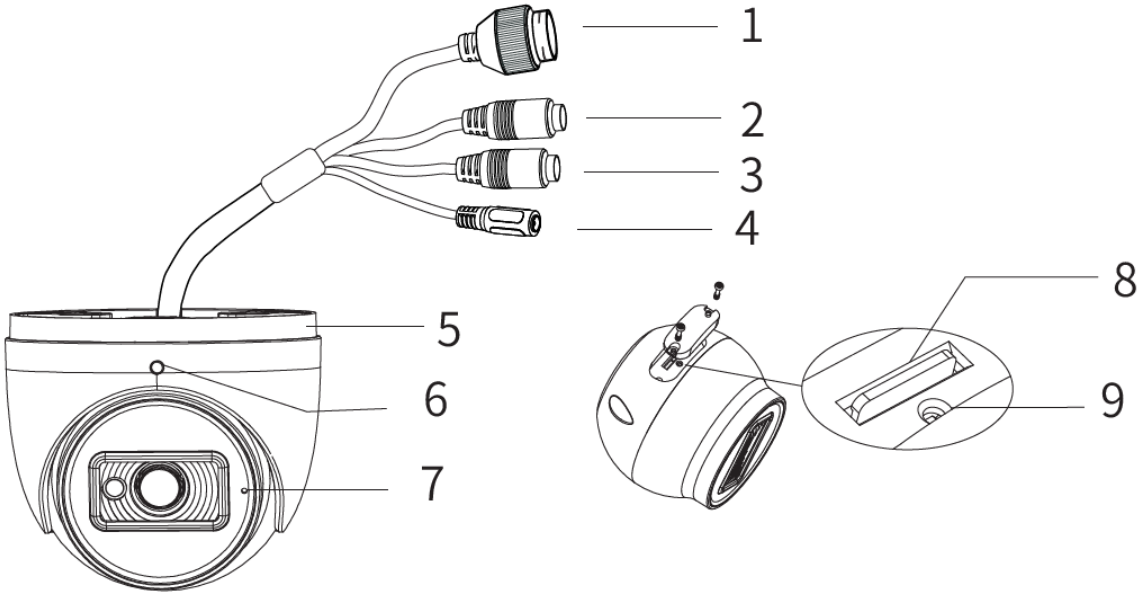

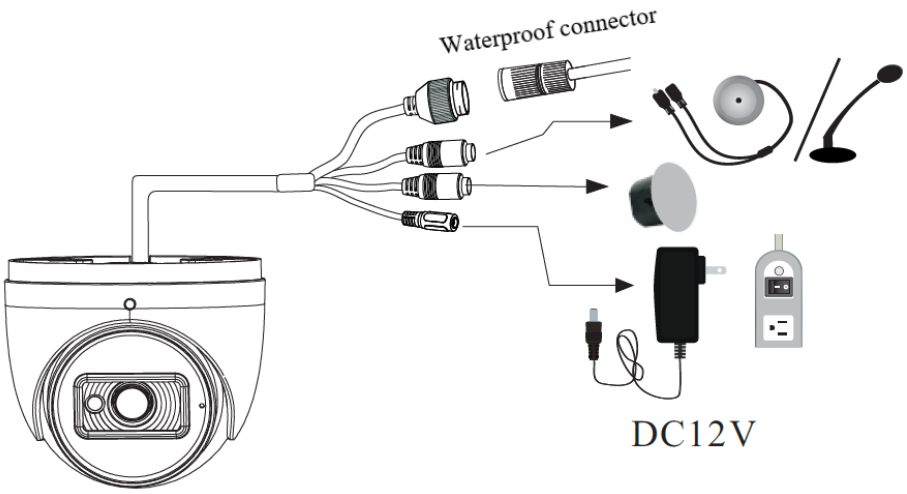

1	Ethernet connector (PoE)	6	Fixed Screw
2	MIC-Audio input connector	7	Microphone
3	HP-Audio output connector	8	microSD card slot
4	Power connector (DC 12V)	9	Default button
5	Mounting Base	10	IR LED

Note:

1. It is recommended to install the waterproof connector for outdoor installation.
2. This series can be powered by DC 12V / PoE power supply. If the PoE switch is used to power the camera, DC 12V power supply is not required.
3. To load default settings, press and hold the default button for 10 seconds.

1.5 GV-GEBF4911

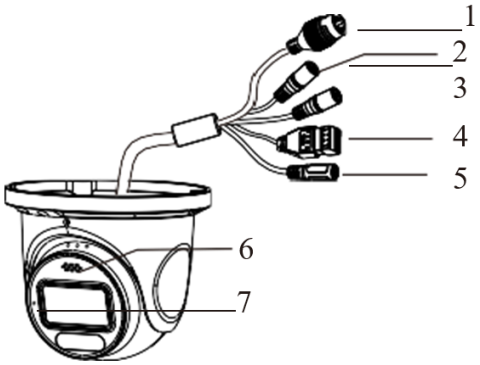

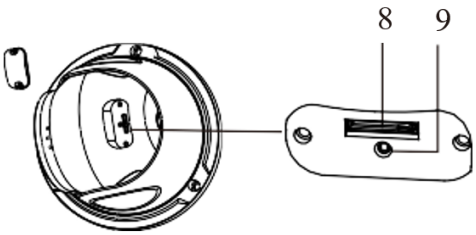

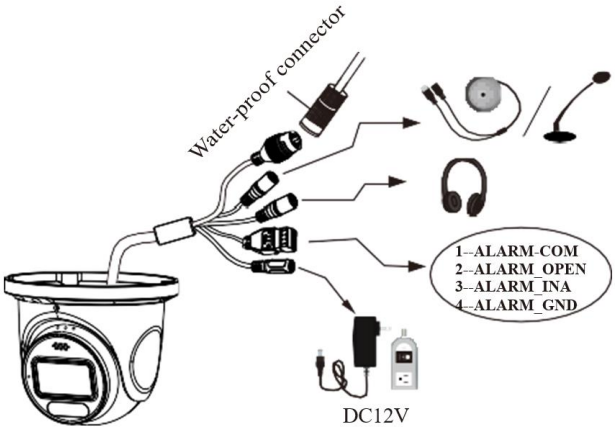

1	Ethernet connector (PoE)	7	Microphone
2	Audio input	8	microSD card slot
3	Audio output	9	Default button
4	Alarm input/output	10	Warm LED
5	Power port (DC 12V)	11	IR LED
6	Speaker	12	Active Deterrence LED

Note:

1. It is recommended to install the water-proof connector for outdoor installation.
2. This series can be powered by DC 12V / PoE power supply. If the PoE switch is used to power the camera, DC 12V power supply is not required.
3. To load default settings, press and hold the default button for 10 seconds.

Connecting Alarm Input/Output

Alarm Input

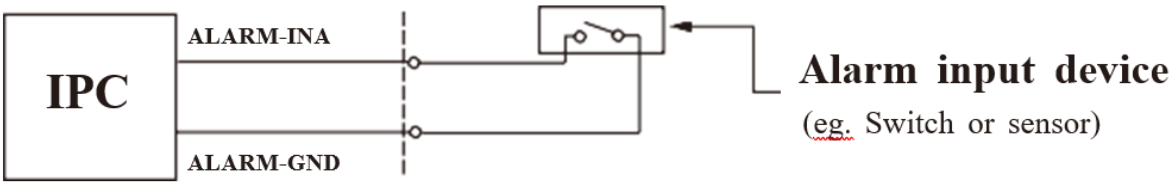

Alarm Output

Max. load: DC 30V, 1A

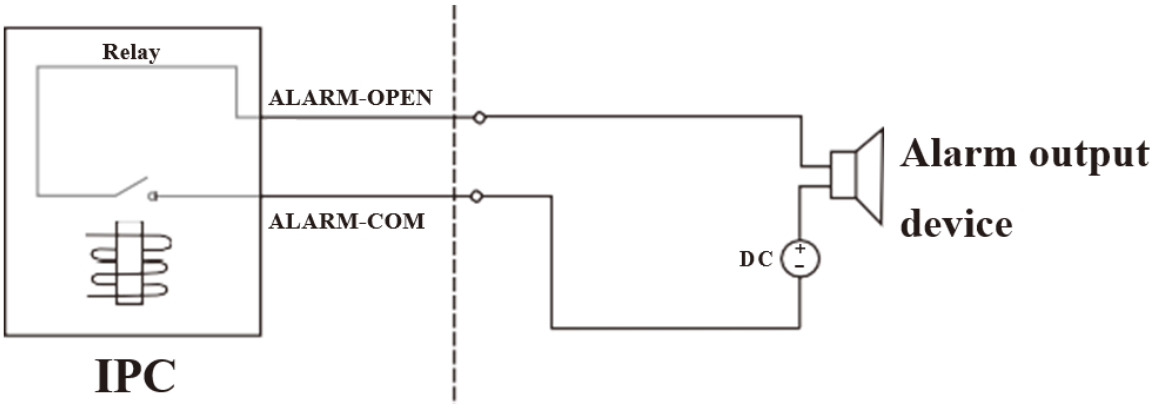

1.6 GV-GFER6900

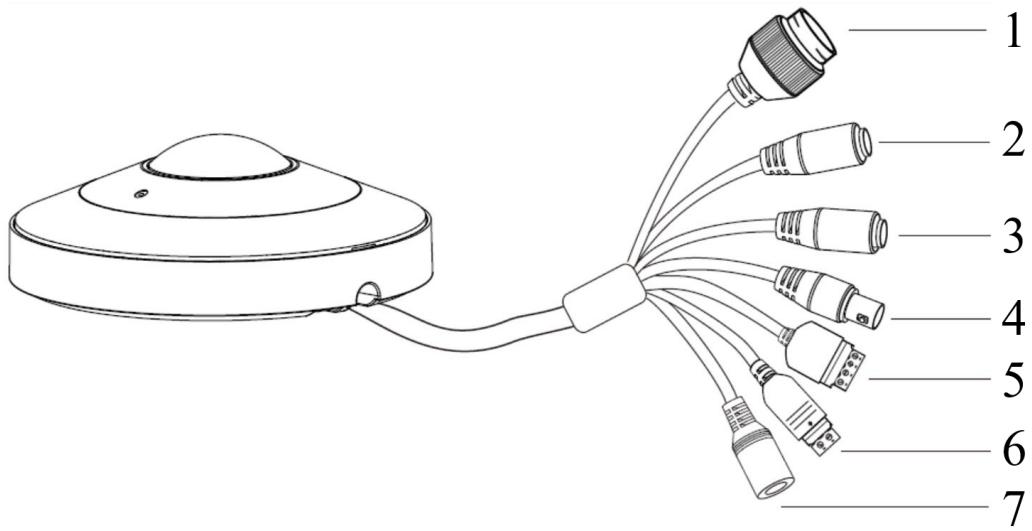

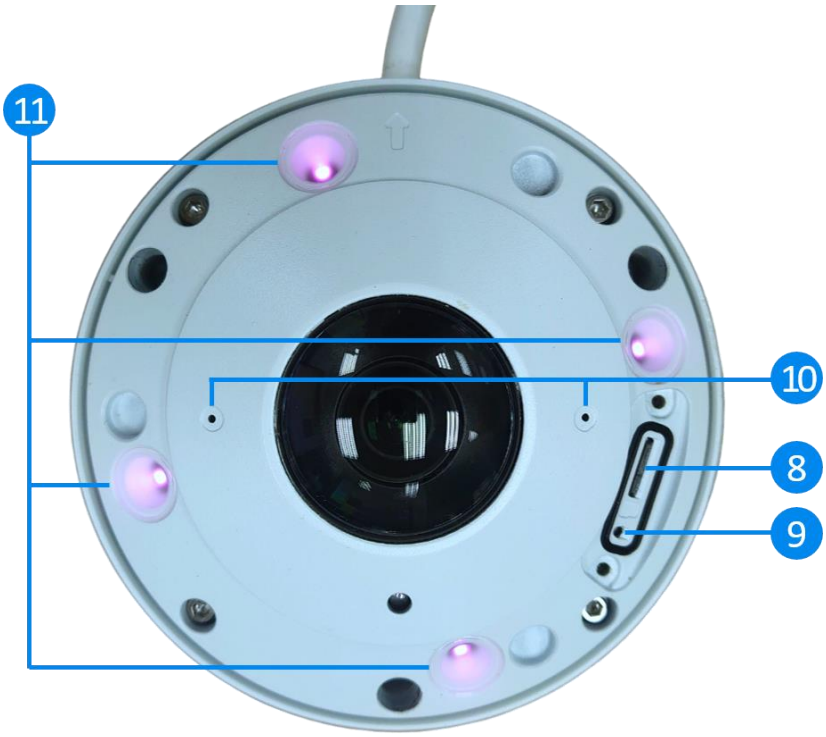

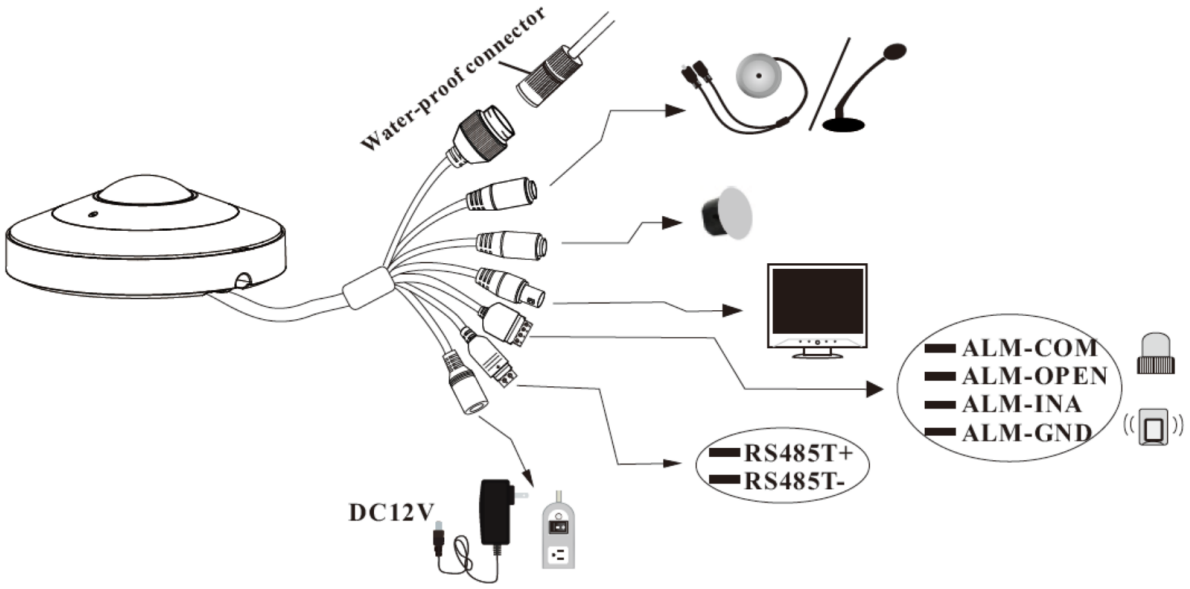

1	Ethernet connector (PoE)	7	Power connector (DC 12V)
2	MIC audio input connector	8	microSD card slot
3	HP audio output connector	9	Default button
4	CVBS video output (BNC)	10	Built-in microphone
5	Alarm input/output	11	IR LED x 4
6	RS-485 port		

Note:

1. It is recommended to install the water-proof connector for outdoor installation.
2. This series can be powered by DC 12V / PoE power supply. If the PoE switch is used to power the camera, DC 12V power supply is not required.
3. To load default settings, press and hold the default button for 10 seconds.

Alarm Connection

Alarm input: Join the grounding ends of the sensor and the camera and then connect the signal cable of the sensor to the alarm input port of the camera.

Alarm output: Loosen the screws in the alarm output port. Then insert the signal wires of the alarm output devices into the port of COM and OPEN separately. Finally tighten the screws. Some of the external alarm output devices need the power supply.

Connecting Network Cable

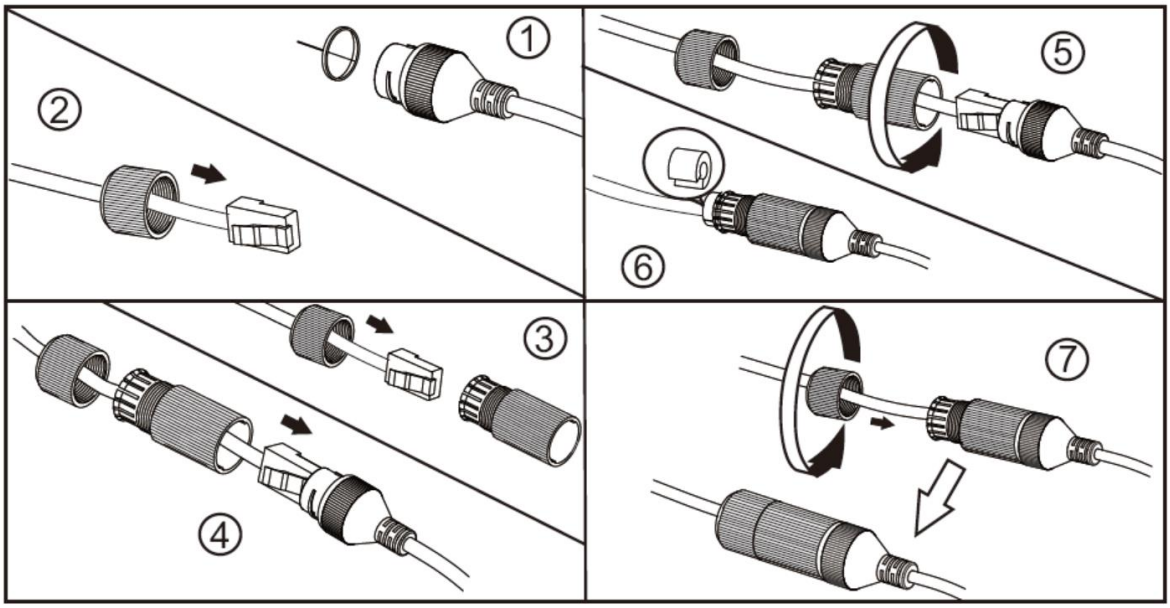

Note: If the RJ-45 connector of the network cable has a jacket and cannot be threaded through the kit, remove the jacket. If the jacket cannot be removed, cut off the connector and install an RJ-45 connector without the jacket.

1.7 GV-GVD4910

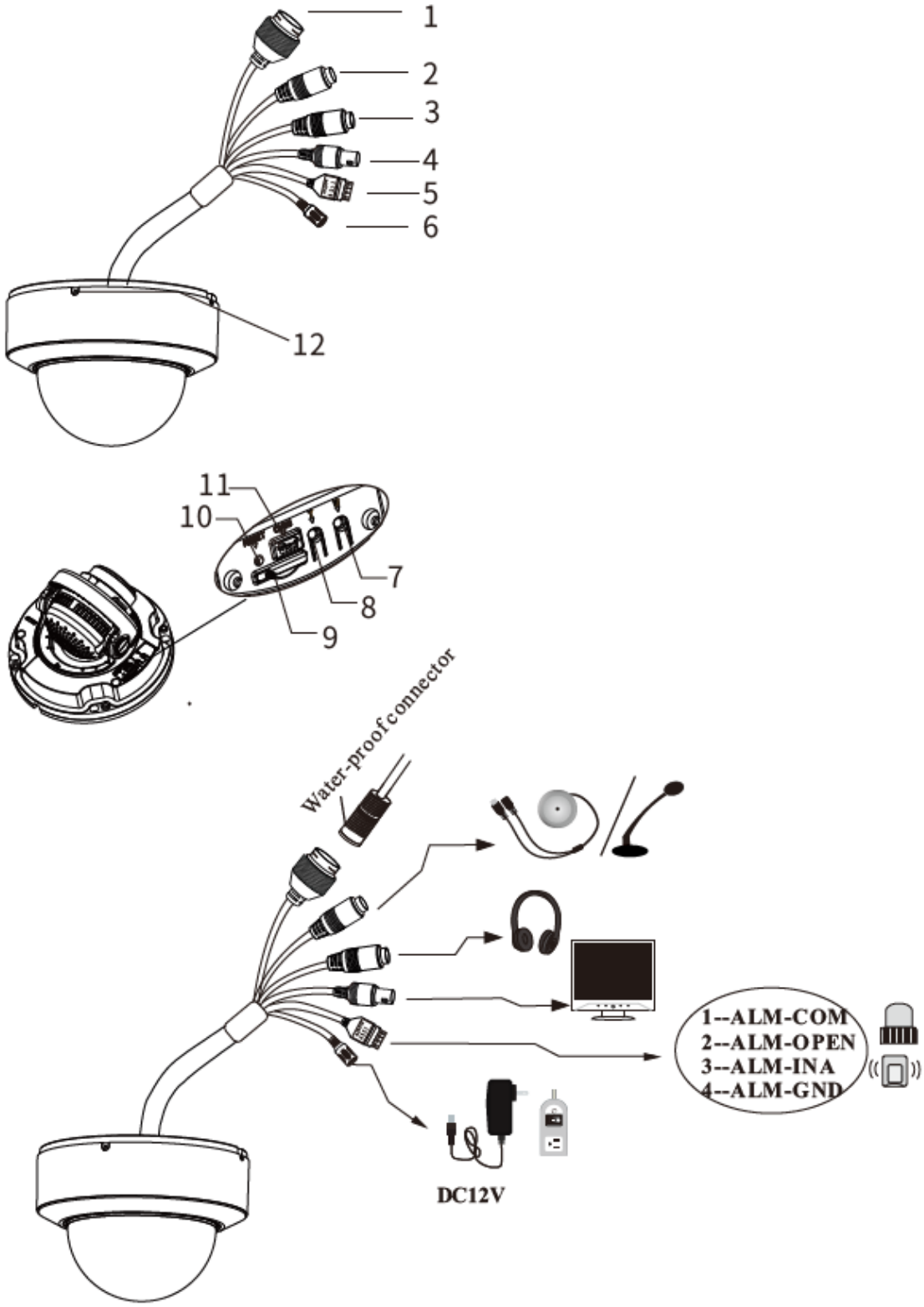

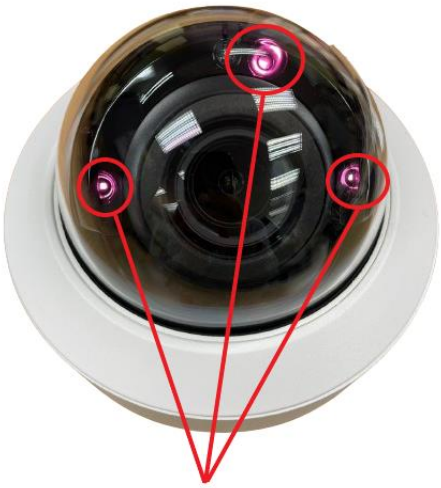

13

1	Ethernet connector (PoE)	8	Zoom +
2	MIC-Audio input	9	microSD card slot
3	HP-Audio output	10	Default button
4	CVBS Video Output	11	DC IN & CVBS Interface
5	Alarm input/output	12	Microphone
6	Power port (DC 12V)	13	IR LED x 3 (the third LED light will be on at long shots)
7	Zoom -		

Note:

1. It is recommended to install the water-proof connector for outdoor installation.
2. This series can be powered by DC 12V / PoE power supply. If the PoE switch is used to power the camera, DC 12V power supply is not required.
3. To load default settings, press and hold the default button for 10 seconds.

Connecting Alarm Input / Output

Alarm Input

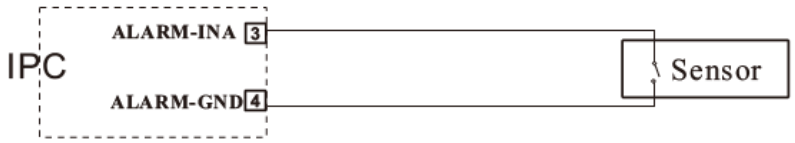

Alarm Output

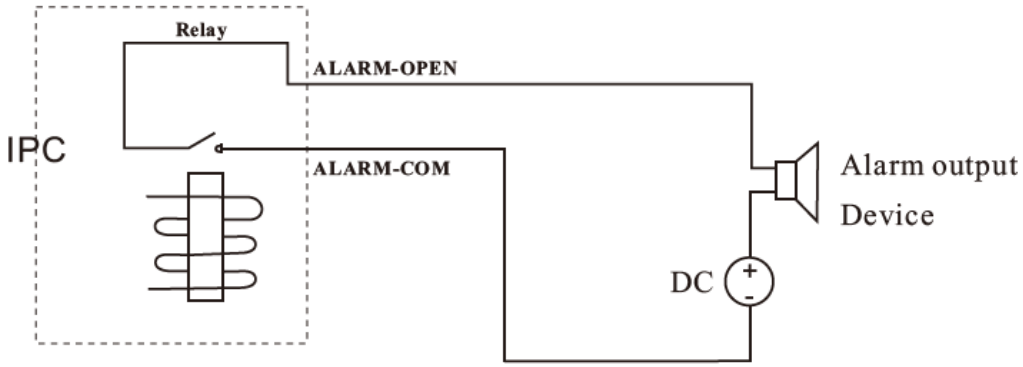

Contact parameters of Relay:

Contact Load: resistive: 1A 125V AC / 24V DC

Max. Voltage: 30V DC / 125V AC

Max. Current: 1A

Min. Current & Voltage: 10mA, 5V DC

2. Installation

The following instructions are for standard installs. Refer to the GV-G Series IP Camera Mount Installation Guide for more information on optional GV-Mount installations.

2.1 GV-GBL4900

Make sure that the wall or ceiling can support at least 3 times the camera's weight and that the installation is done in a dry environment.

1. Drill the screw holes and the cable hole on the wall according to the drill template.

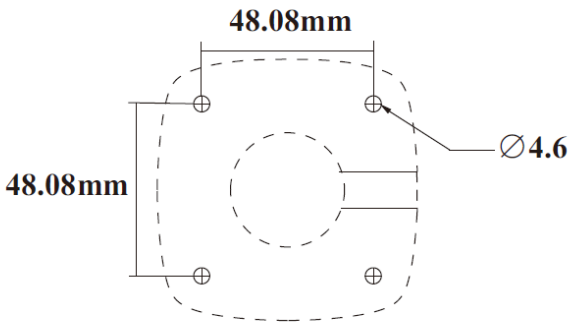

2. Route and connect the cables.
3. Secure the mounting base with camera to the wall with the screws provided.

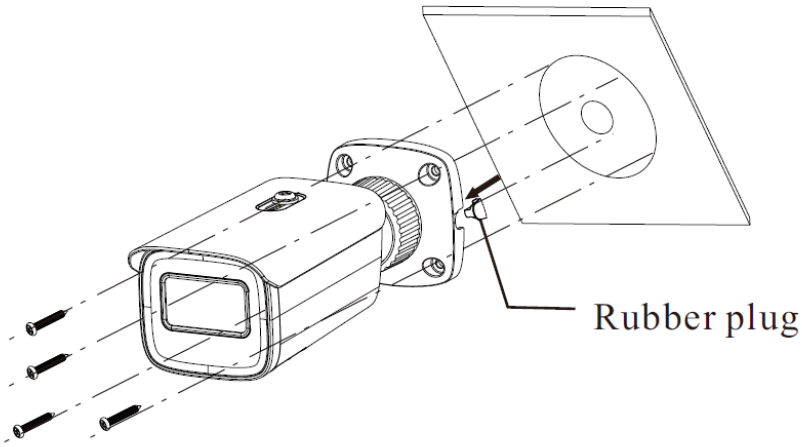

4. Bracket adjustment. Before adjustment, preview the image of the camera on a monitor and then loosen the adjusting ring to adjust the viewing angle of the camera. Tighten the adjusting ring after the adjustment.

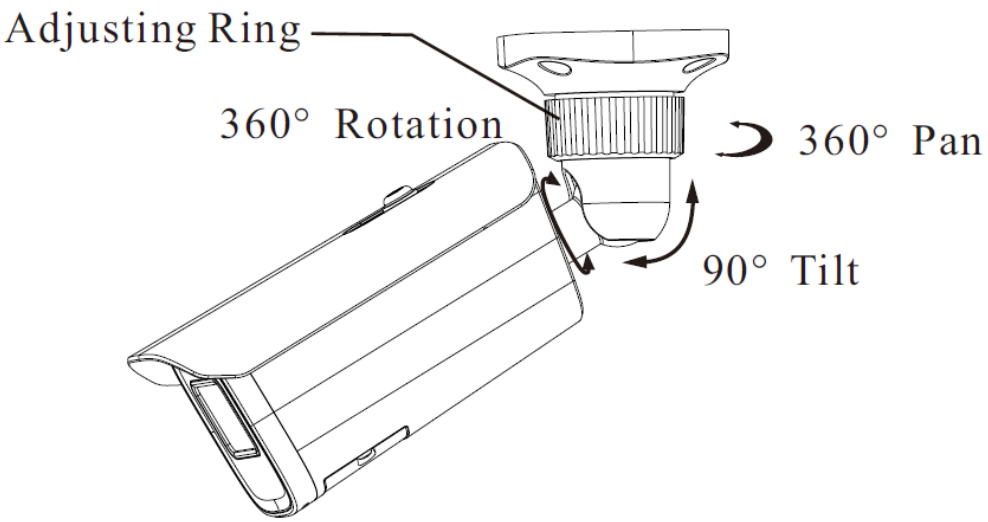

5. Open the cover of the camera and then insert a microSD card.

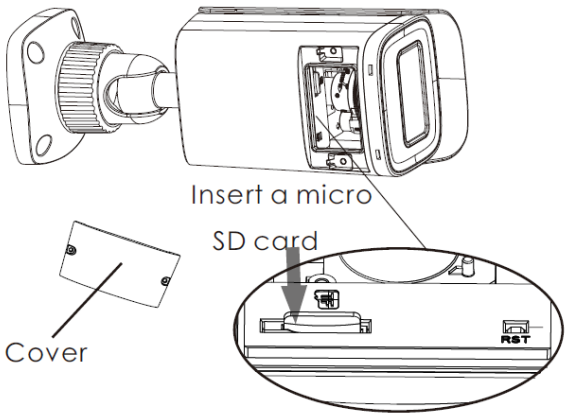

6. Install the cover back to the camera and secure it firmly with the screws. (Note that the cover should not be installed unevenly.)

2.2 GV-GBL4911

Make sure that the wall or ceiling can support at least 3 times the camera's weight and that the installation is done in a dry environment. It's recommended to reinstall the camera cover within 4 hours of removal.

1. Drill the screw holes and the cable hole (if you want to route through the ceiling) on the wall or ceiling according to the drill template.

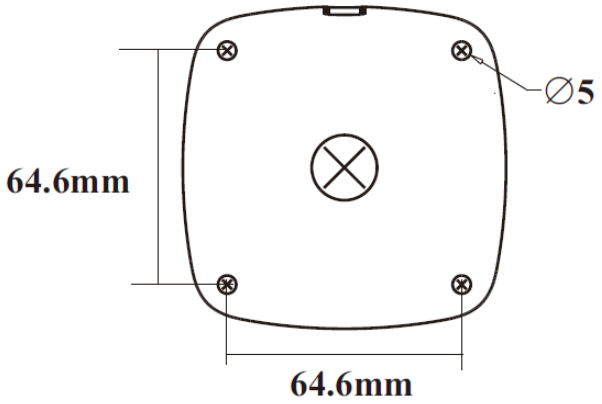

2. Route the cables and connect the relevant cables.
3. Fasten the mounting base to the wall with the screws provided.

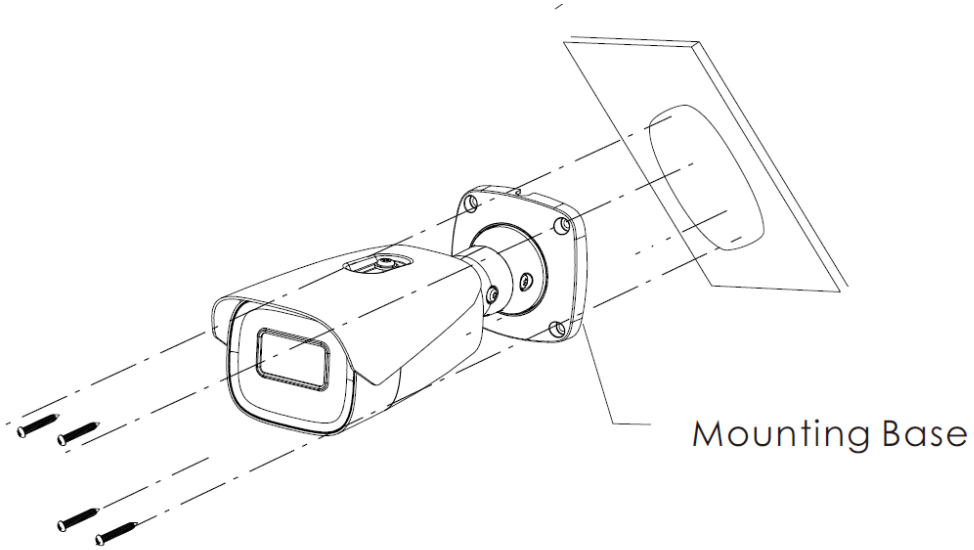

4. Bracket adjustment. Before adjustment, preview the image of the camera on a monitor (see the figure of step 5) and then loosen the lock screws to adjust the view angle of the camera. After that, tighten the lock screws.

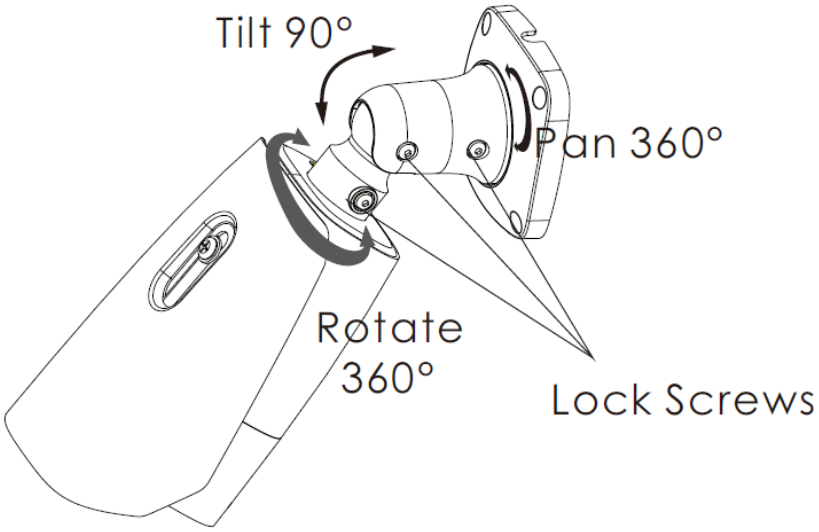

5. Open the cover of the camera as shown in the following figure and then insert a microSD card. After that, press the T or W button to obtain an optimum image. Before adjustment, view the image of the camera on a monitor.

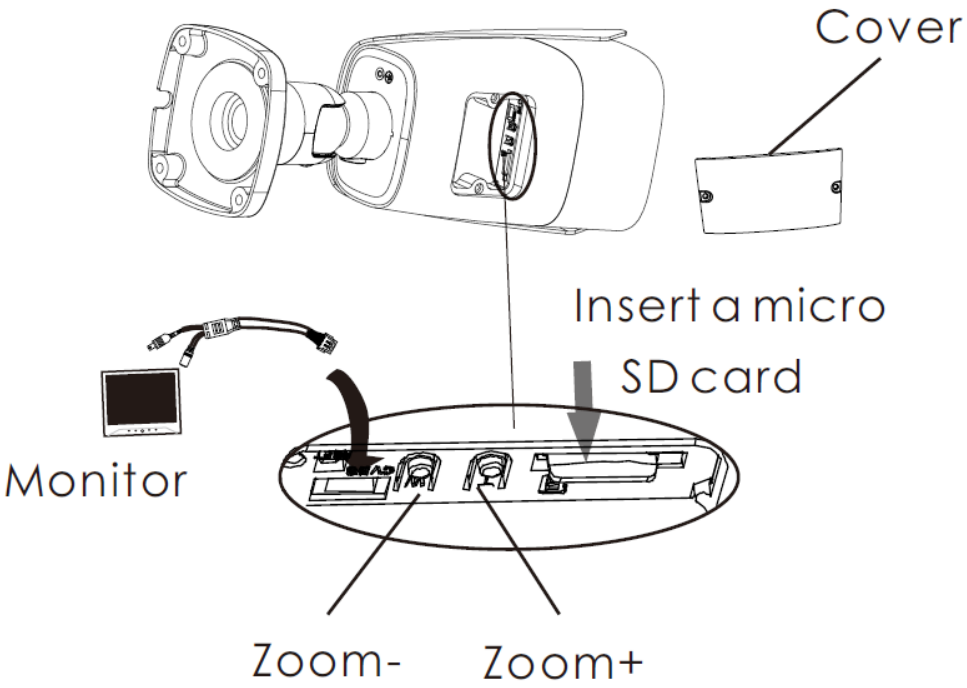

6. Install the cover back to the camera and secure it firmly with the screws.

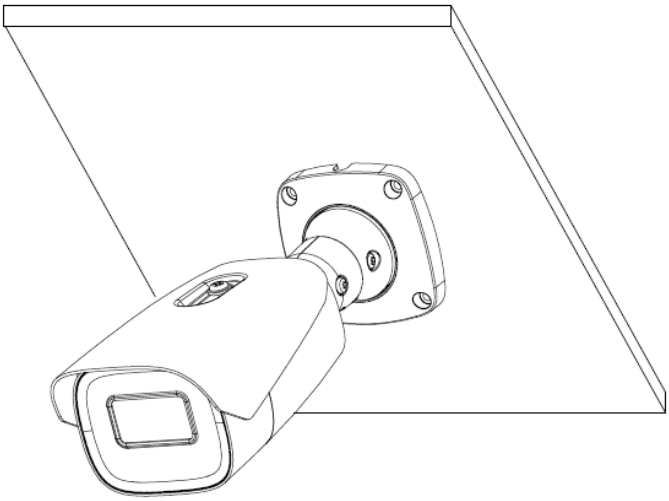

Note: Install the cover back in the same way you disassemble it, in case the sealing performance is affected.

2.3 GV-GDR4900

Before installation, consider the following points:

- Ensure the wall or ceiling is solid enough to support three times the weight of the camera.
- After removing the lower dome, reattach it within four hours.
- Don't remove the protective film until the installation is complete.

1. Use two fingers to remove the trim ring from the rim with marks. Then loosen the screws to open the lower dome.

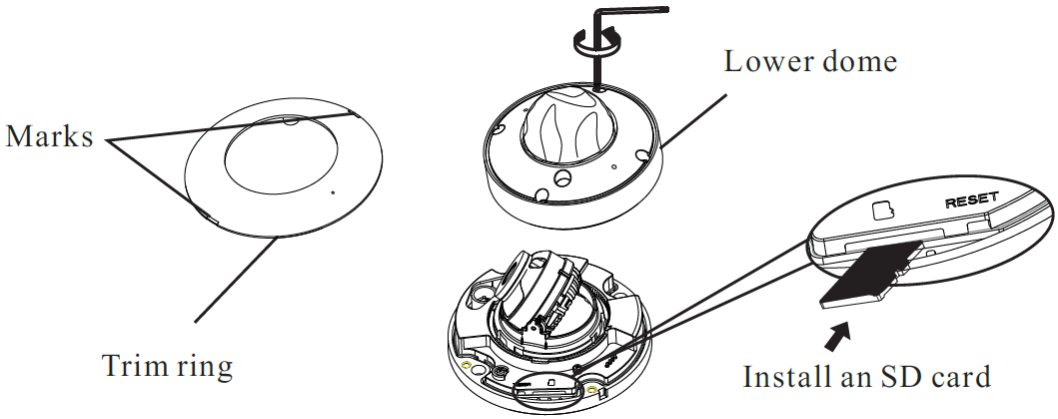

2. Attach the drill template to the place where you want to fix the camera and then drill 2 screw holes and 1 cable hole (if you want to route the cables through the ceiling) according to the drill template.

3. Route and connect these cables.

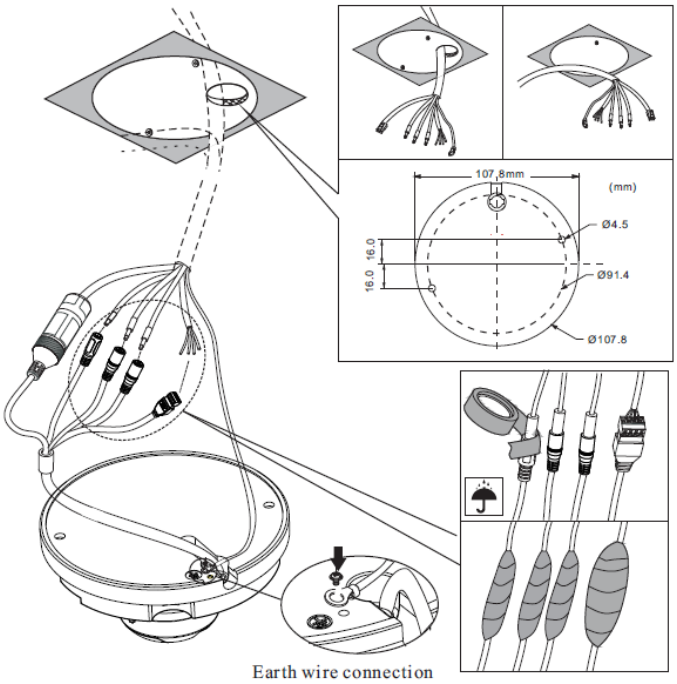

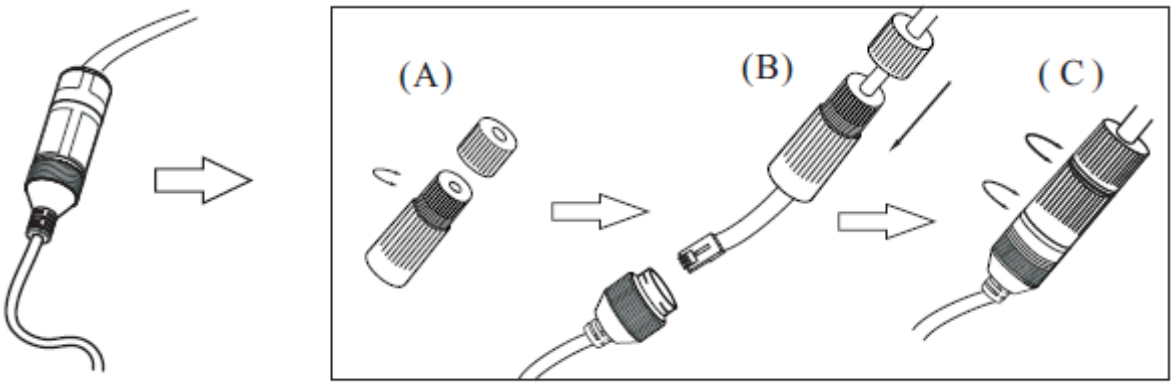

(A) Loosen the nut from the main element.

(B) Run the network cable (without RJ 45 connector) through the both elements. Then crimp the cable with RJ 45 connector.

(C) Connect the cable to the Ethernet connector. Then tighten the nut and the main cover.

4. Secure the camera to the ceiling or wall with the screws provided.

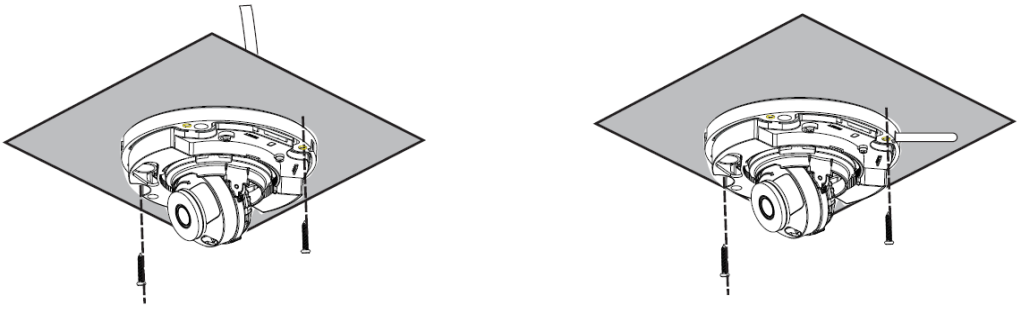

5. Three-axis adjustment. Before adjustment, preview the image of the camera on a monitor and then adjust the camera according to the figure below to get an optimum angle.

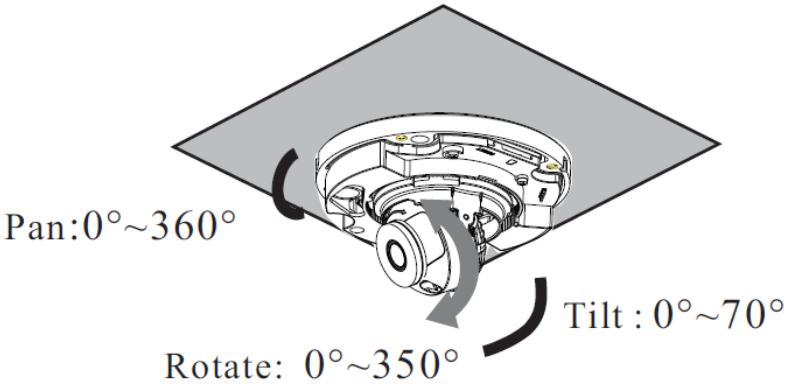

6. Replace the lower dome to the camera and make sure the light sensor can be seen from the outside. If the light sensor is hidden, re-adjust the lens. Then put the trim ring onto the lower dome. Finally, remove the protection film softly.

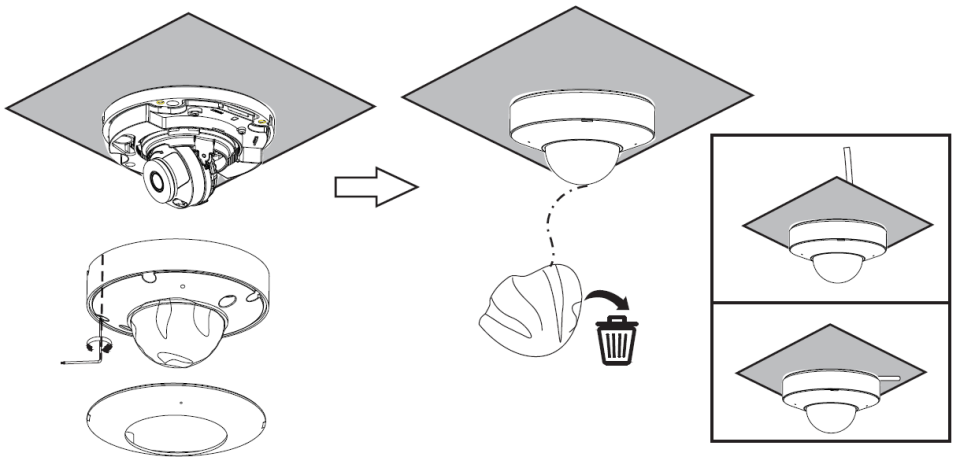

2.4 GV-GEB4900

Make sure that the wall or ceiling can support at least 3 times the camera's weight and that the installation is done in a dry environment.

1. Loosen the fixed screw to dissemble the camera.

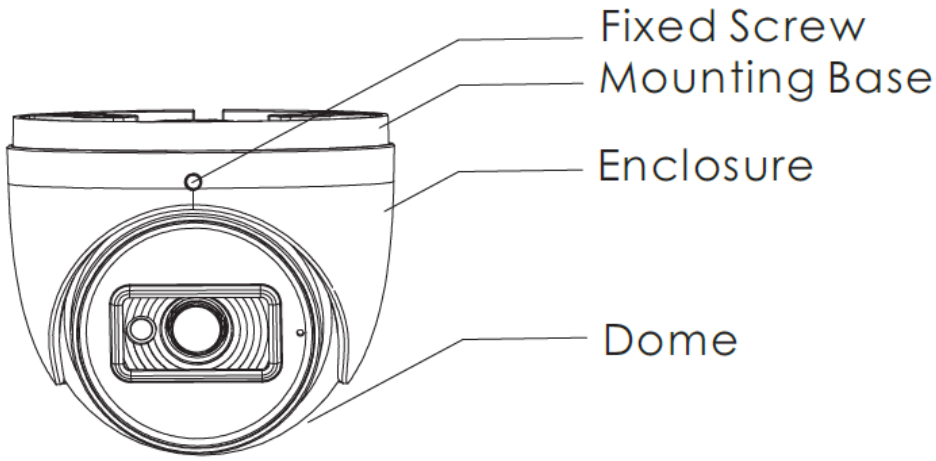

2. Unscrew the cover of the dome and then insert a microSD card. After that, install back the cover and make sure the cover is installed firmly.

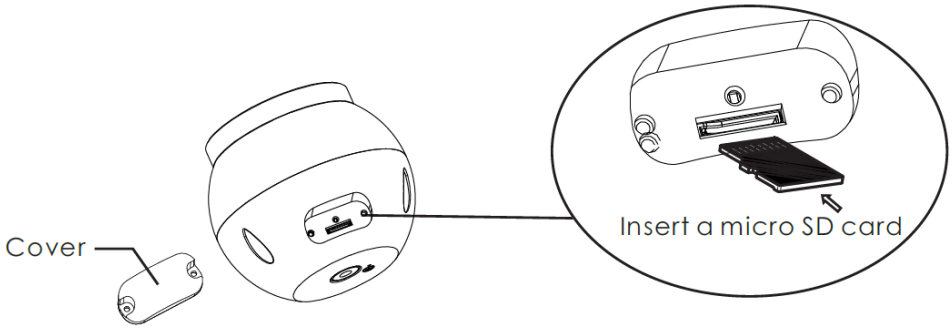

3. Drill the screw holes and the cable hole on the ceiling according to the drill template. Then route and connect the cables.

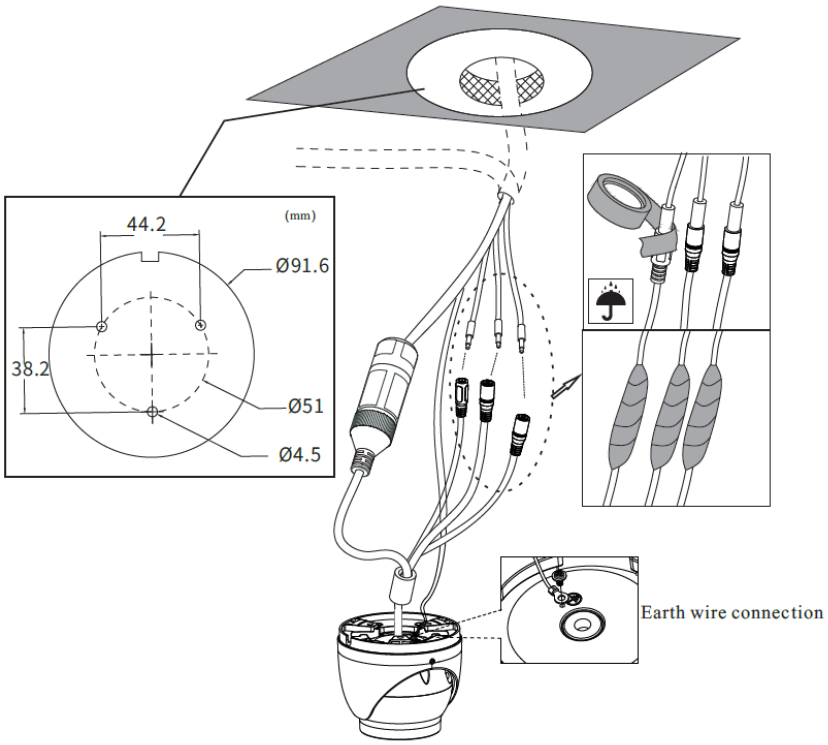

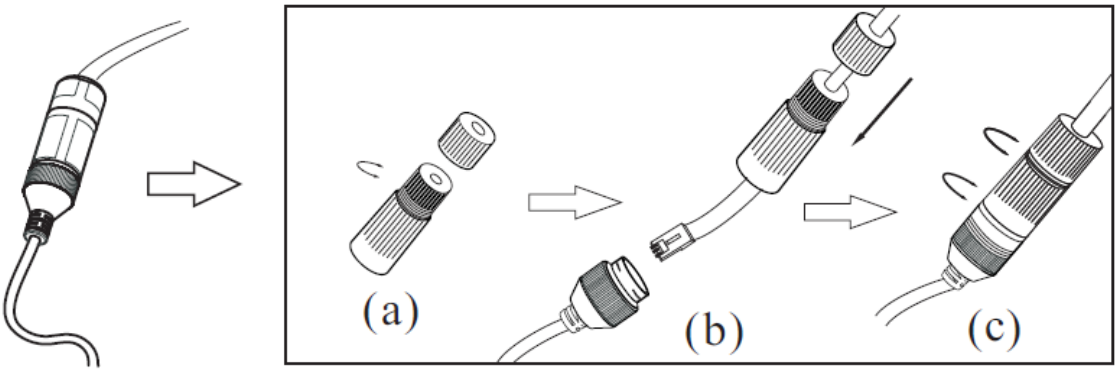

(a) Loosen the nut from the main element.

(b) Run the network cable (without RJ 45 connector) through the both elements. Then crimp the cable with RJ 45 connector.

(c) Connect the cable to the hermetic connector. Then tighten the nut and the main cover.

4. Secure the mounting base to the ceiling or wall with the screws provided.

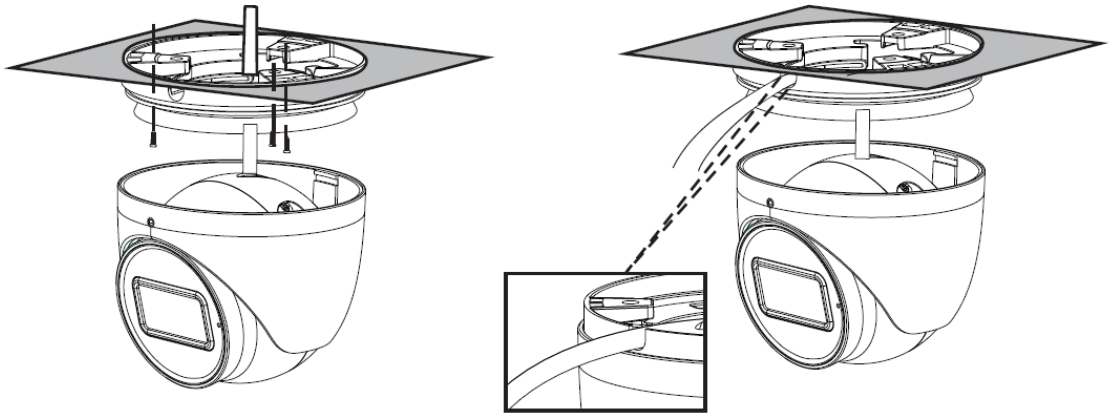

5. Install the dome and enclosure to the mounting base.

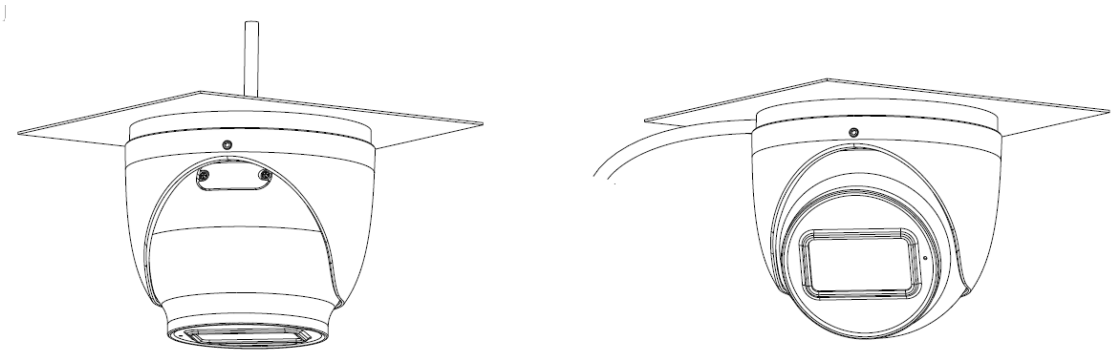

Then adjust the dome to obtain an optimum viewing angle.

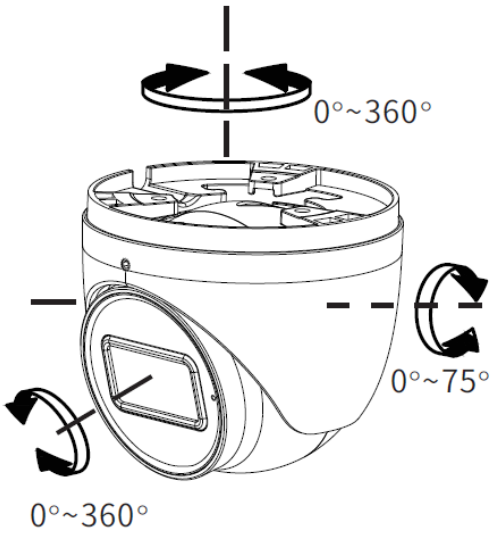

6. Finally, fasten the camera with the fixed screw.

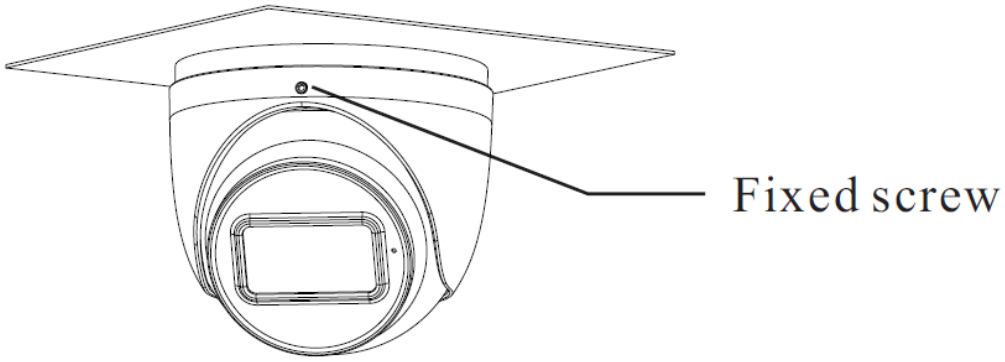

2.5 GV-GEBF4911

Make sure that the wall or ceiling can support at least 3 times the camera's weight and that the installation is done in a dry environment.

1. Loosen the set screw and then move the camera unit to expose the cover of the SD card slot.

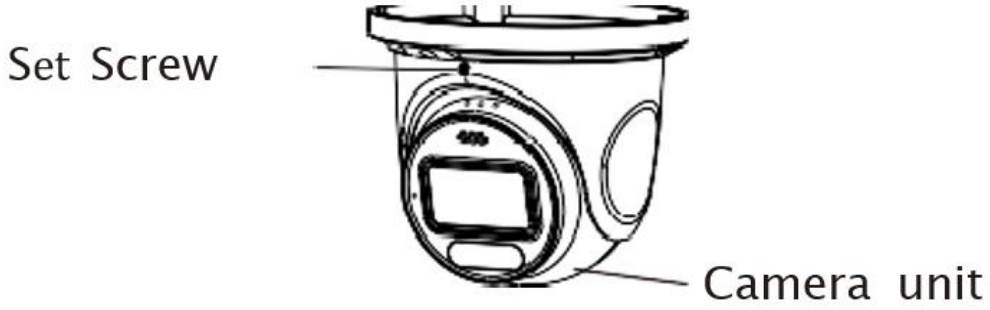

2. Unscrew the cover of the camera unit and then insert a microSD card. After that, install back the cover and make sure the cover is installed firmly.

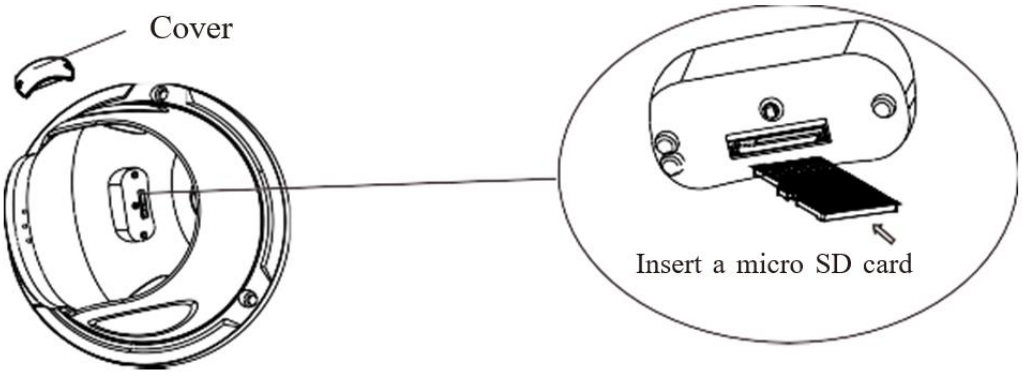

3. Drill the screw holes and the cable hole on the ceiling according to the drill template. Then route and connect the cables.

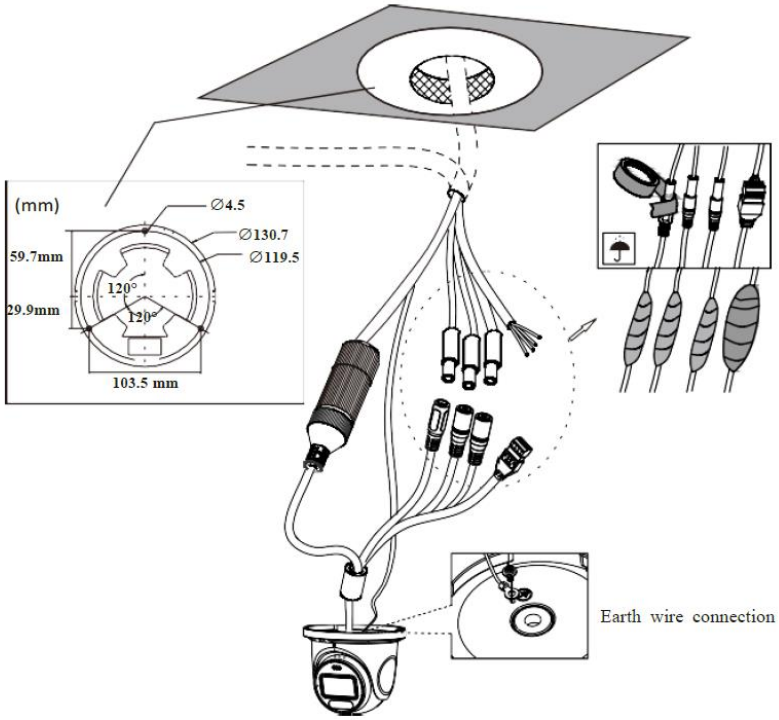

(a). Loosen the nut from the main element.

(b). Run the network cable (without RJ 45 connector) through the both elements. Then crimp the cable with RJ 45 connector.

(c). Connect the cable to the Ethernet connector. Then tighten the nut and the main cover.

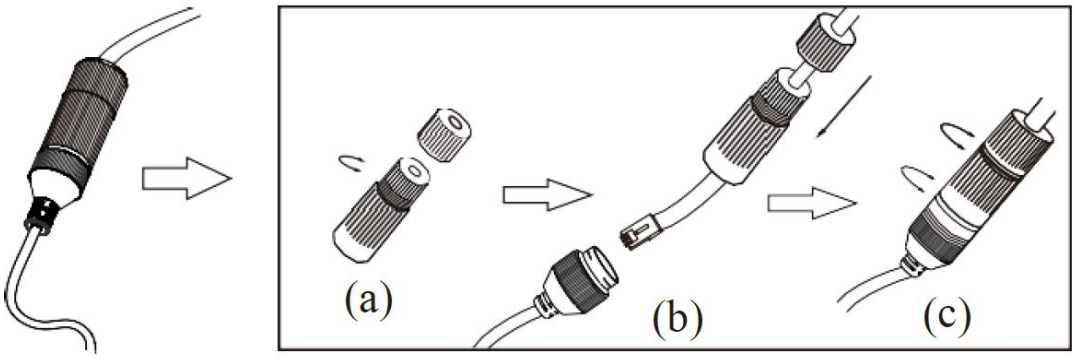

4. Secure the mounting base to the ceiling or wall with the screws provided.

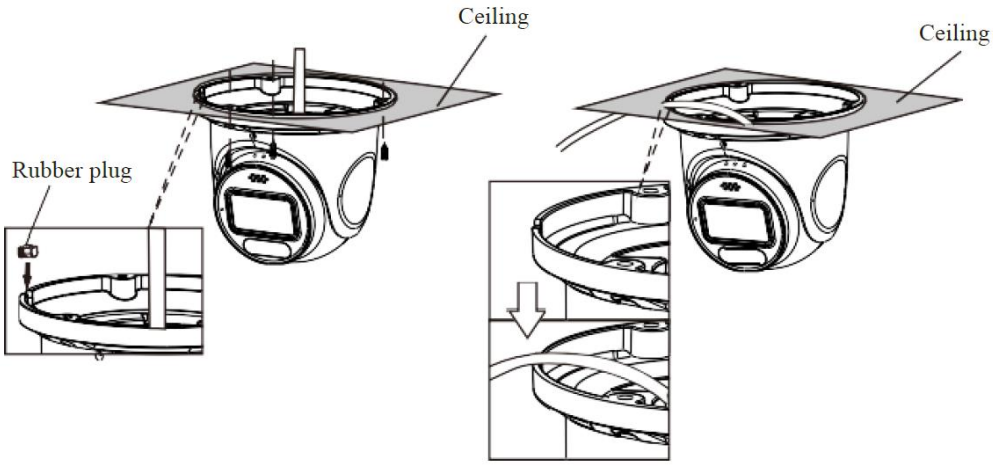

5. Install the dome and enclosure to the mounting base.

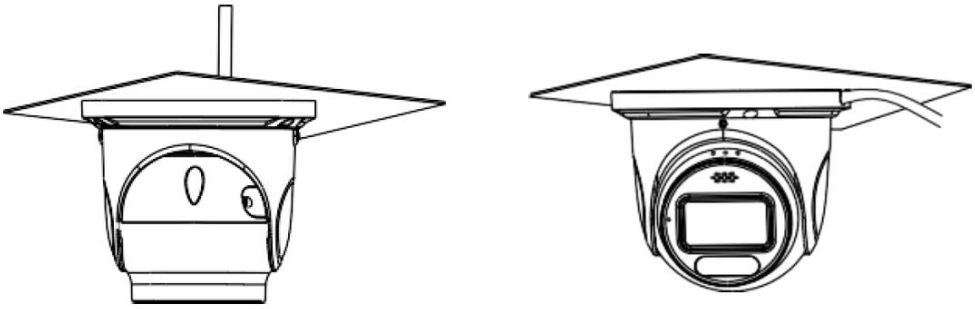

6. Adjust the camera to obtain an optimum angle. Before adjustment, preview the image of the camera on a monitor.

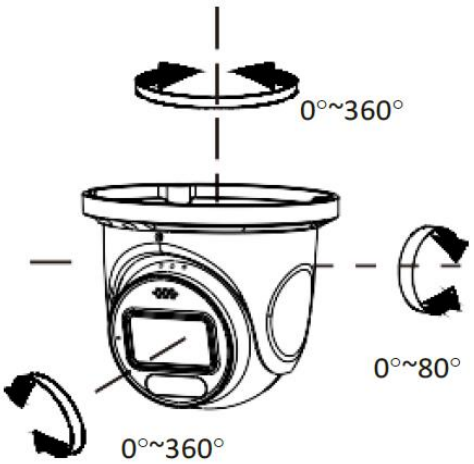

7. Tighten the set screw after you finish adjusting the viewing angle of the camera.

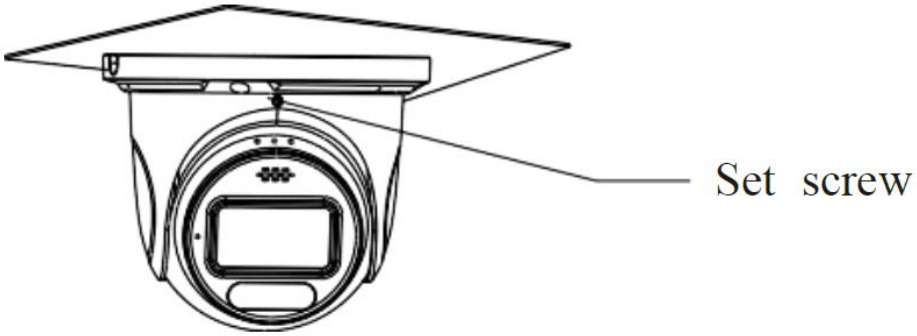

2.6 GV-GFER6900

Make sure that the wall or ceiling can support at least 3 times the camera's weight and that the installation is done in a dry environment. It's recommended to reinstall the camera cover within 4 hours of removal.

Install SD Card

1. Remove the trim ring from the gap of the camera.

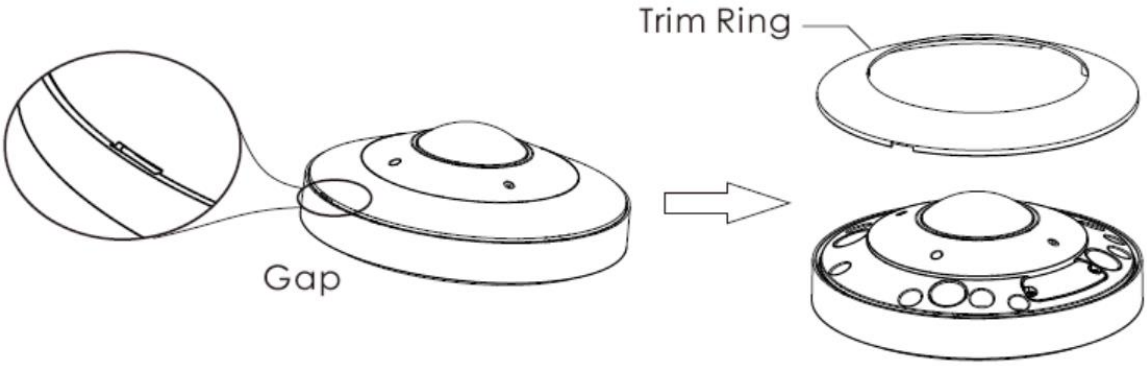

2. Loosen the screws of the cover and then insert a microSD card. After that, install the cover back.

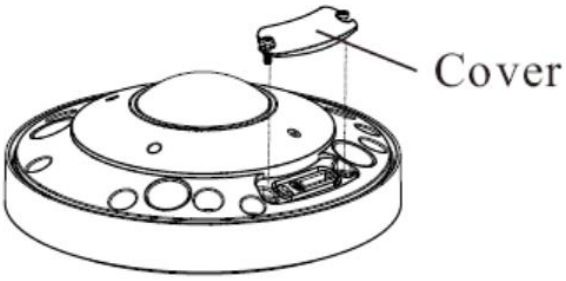

Install Camera

1. Remove the trim ring from the gap of the camera (see Step 1 in *Install SD Card*).

2. Drill the screw holes and cut the cable hole (A) in the ceiling according to the drill template.

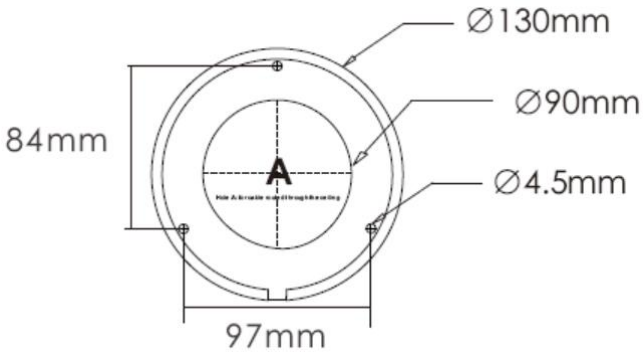

3. Route and connect the cables.

4. Secure the camera to the wall with screws as shown below.

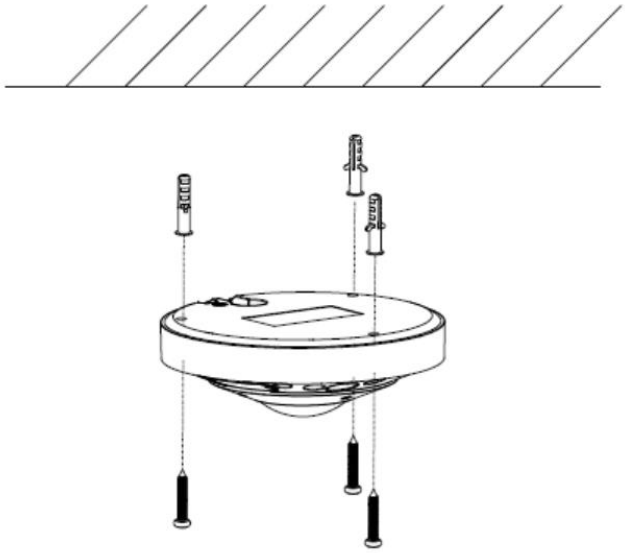

5. Install the trim ring back to the camera.

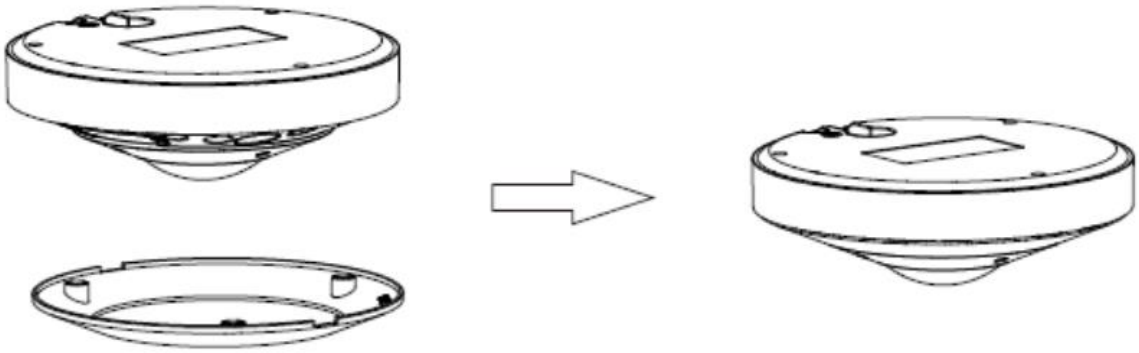

2.7 GV-GVD4910

Before installation, consider the following points:

- Ensure the wall or ceiling is solid enough to support three times the weight of the camera.
- After removing the lower dome, reattach it within four hours.
- Don't remove the protective film until the installation is complete.

1. Rotate the trim ring anticlockwise to remove it from the camera. Then loosen the screws to open the lower dome.

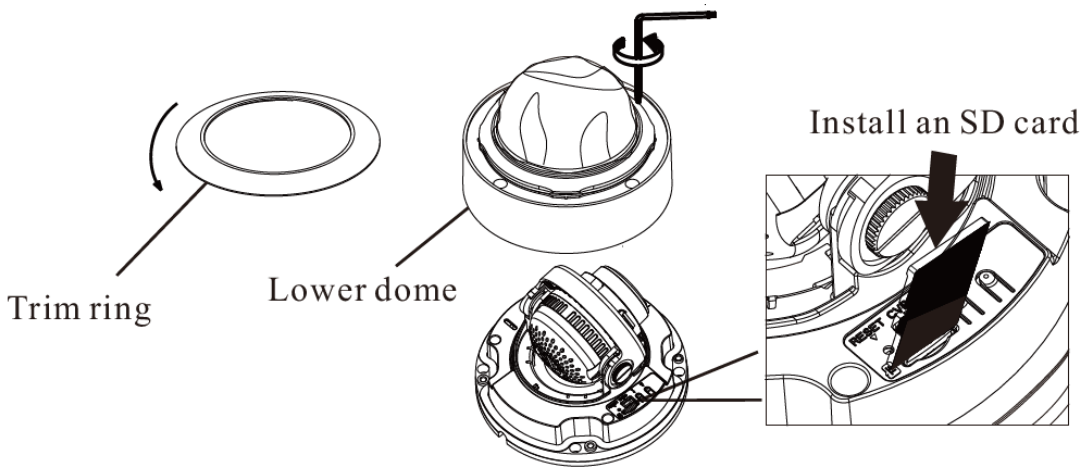

2. Attach the drill template to the place where you want to fix the camera and then drill 4 screw holes and 1 cable hole (if you want to route the cables through the ceiling) according to the drill template.

3. Route and connect these cables.

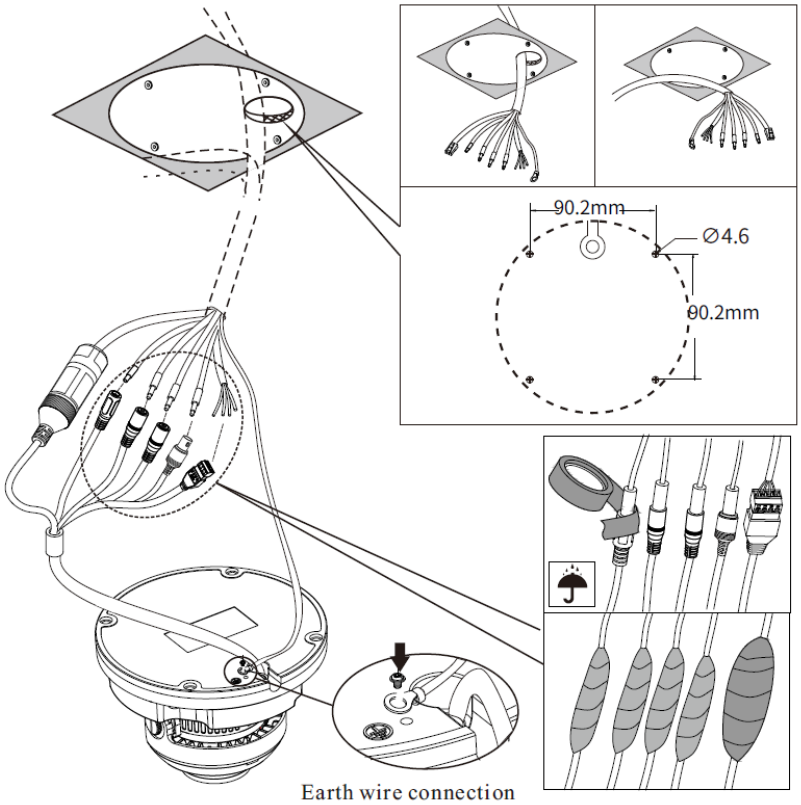

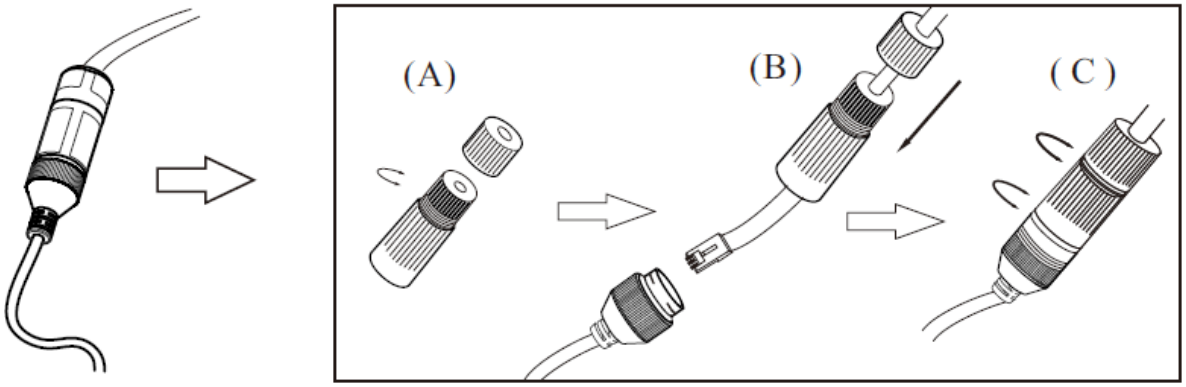

A. Loosen the nut from the main element.

B. Run the network cable (without RJ-45 connector) through the both elements. Then crimp the cable with RJ-45 connector.

C. Connect the cable to the Ethernet connector. Then tighten the nut and the main cover.

4. Secure the camera to the ceiling or wall with the screws provided.

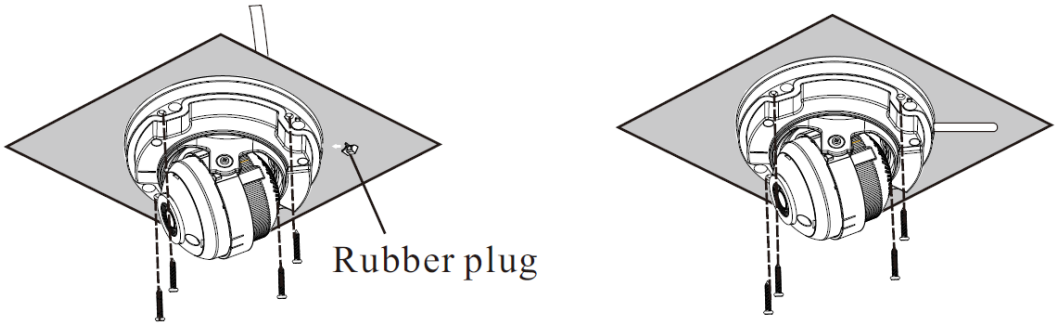

5. Three-axis adjustment. Before adjustment, preview the image of the camera on a monitor and then adjust the camera according to the figure below to get an optimum angle.
6. Press the T or W button to obtain an optimum image.

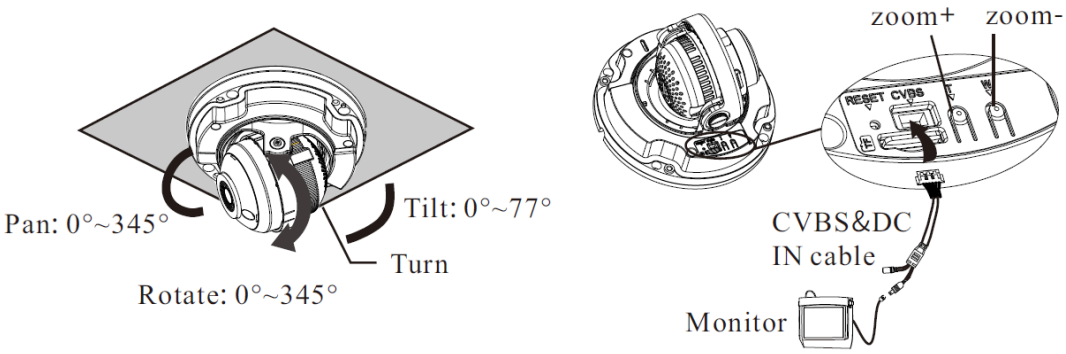

7. Install the lower dome back to the camera and fasten it with screws. Then put the trim ring onto the lower dome and then rotate it clockwise until it is locked. Finally, remove the protection film softly.

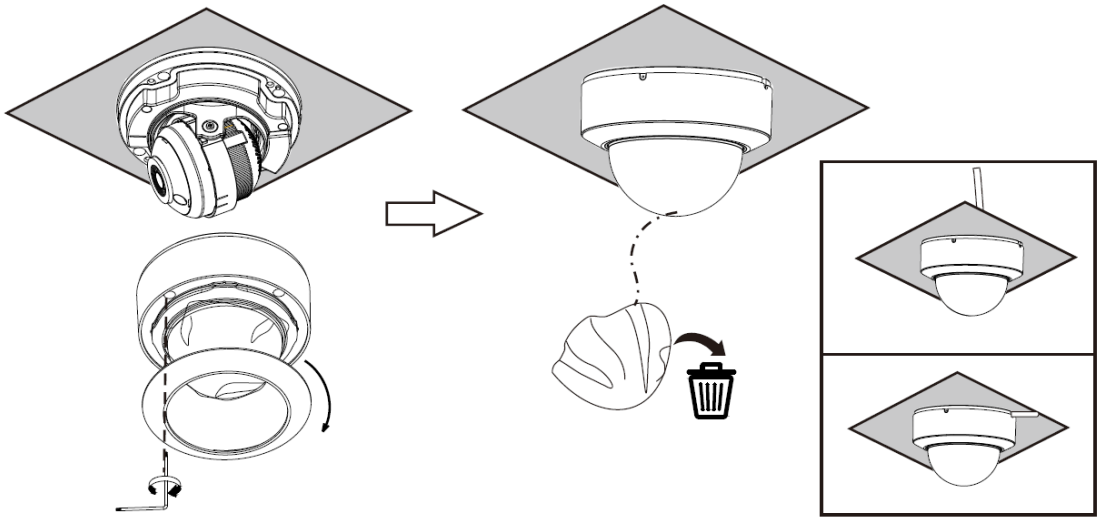

3. Accessing the Network Camera

3.1 Looking Up the Dynamic IP Address

By default, when the camera is connected to a LAN with the DHCP server, it is automatically assigned with a dynamic IP address. Follow the steps below to look up its IP address.

Note: By default, the Administrator's username is **admin** and cannot be modified.

---

1. Make sure the PC used to configure the IP address is under the same LAN as the camera. Download and install **GV-IP Device Utility** from the company website.
2. On the GV-IP Utility window, click the button to search for the IP devices connected in the same LAN. Click the **Name** or **Mac Address** column to sort.
3. Find the camera with its Mac Address, and click on its IP address.

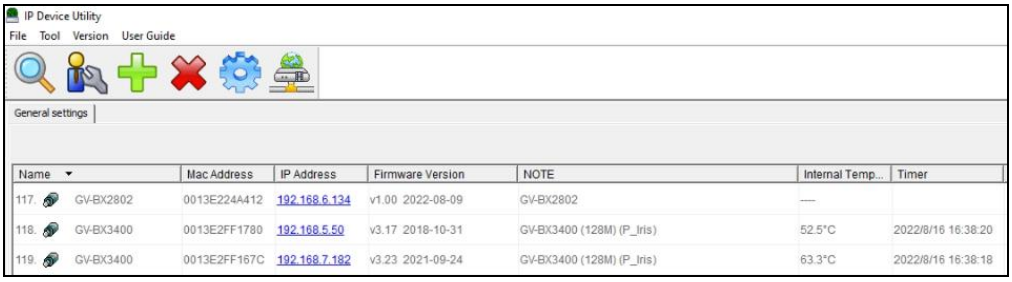

4. For first-time users, you are requested to create a password.

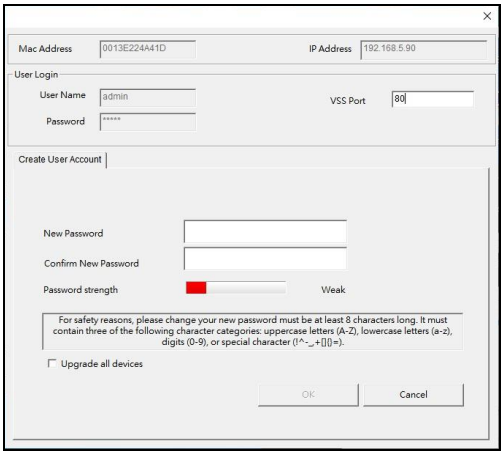

5. Type a new password and click **OK**.
6. Click on its IP address again and select **Webpage** to open its Web interface.
7. Type the set password on the login page and click **Login**.

IMPORTANT:

1. To change the password using GV-IP Device Utility, click on the camera's IP address, and select **Configure > Change Password**. Or you can optionally change the password on the camera's Web interface by clicking **Config > Security > User**; see "Modify User" in *4.7.1 User Configuration* in the user's manual.
2. The security questions should be set after you log in. It is very important for you to reset your password when you forget your password. If you forget the admin password, you can reset the password by clicking Forget Password on the login page. For more details, see *4.7.1 User Configuration* in the user's manual.

3.2 Configuring the IP Address

If the camera is connected to a LAN without the DHCP server, the default IP address will be **192.168.0.10**. Follow the steps below to modify the IP address to avoid IP conflict with other GV-IP devices on the same LAN.

1. Open your Web browser, and type the default IP address **192.168.0.10**.
2. Type the default username **admin** and a password. Click **Login**.
3. Go to **Config** > **Network** > **TCP/IP** to set the IP address.
4. Select **Use the following IP address** and then enter the static IP address and other parameters.

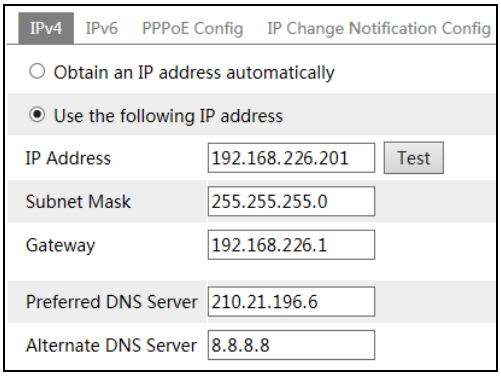

4. The Web Interface

After logging in, the following window will be shown.

Note: Two-way audio, local recording, and the preview mode switch (real-time / balanced / fluent mode) are only supported in IE mode in Microsoft Edge.

For GV-GBL4900 / GBL4911 / GDR4900 / GEB4900 / GEBF4911 / GVD4910:

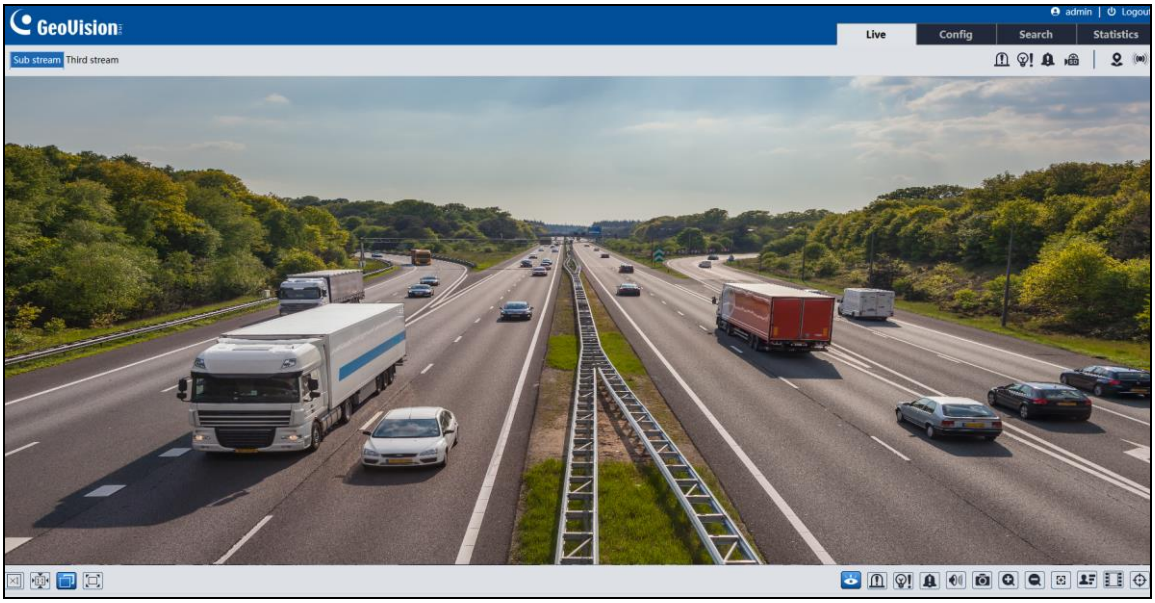

For GV-GFER4900:

Before you view the live image, set the stream mode and installation method as needed (see *4.1.5 Configuring Fisheye Parameters* in the user's manual for details). In the live mode, the different streams and live view modes can be switched as needed.

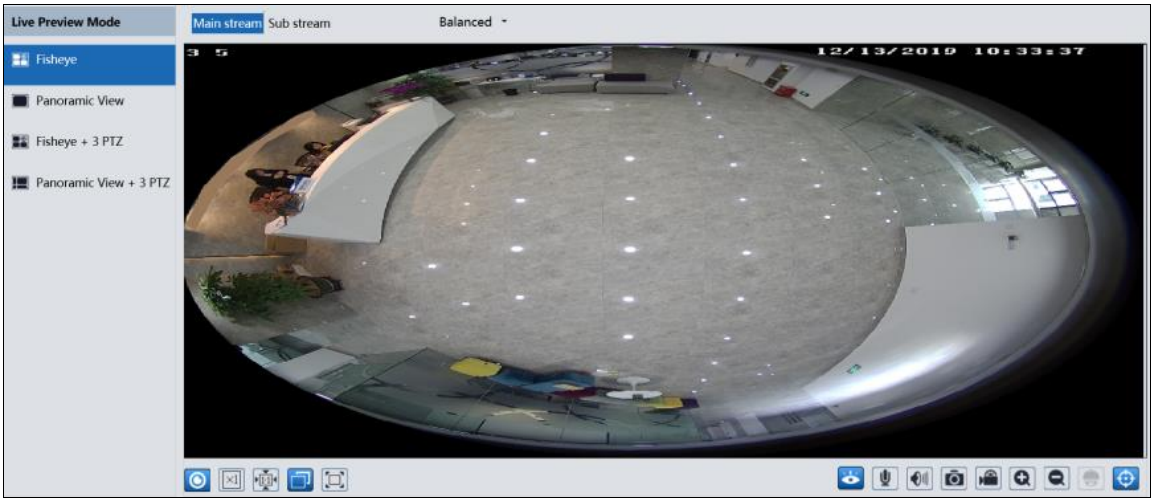

The following table is the instructions of the icons on the live view interface.

Icon	Description	Icon	Description
	Select live preview mode (only for **GV-GFER6900**)		Sensor alarm indicator
	Original size		Motion alarm indicator
	Fit correct scale		Color abnormal indicator (not applicable to **GV-GFER6900**)
	Adapt		Abnormal clarity indicator (not applicable to **GV-GFER6900**)
	Full screen		Scene change indicator (not applicable to **GV-GFER6900**)
	Enable/disable alarm output (not applicable to **GV-GFER6900**)		Alarm output indicator (not applicable to **GV-GFER6900**)
	Enable/disable light alarm (only for **GV-GEBF4911**)		Light alarm indicator (only for **GV-GEBF4911**)
	Enable/disable audio alarm (not applicable to **GV-GFER6900**)		Line Crossing indicator
	Start/stop live view		Region Intrusion indicator
	Start/stop two-way audio (only available in IE mode in Microsoft Edge)		Region Entrance indicator
	Enable/disable audio		Region Exiting indicator
	SD card recording indicator		Face detection indicator (not applicable to **GV-GFER6900**)
	Snapshot		Target Counting by Line indicator
	Start/stop local recording (only available in IE mode in Microsoft Edge)		Target Counting by Area indicator (not applicable to **GV-GFER6900**)
	Zoom in		Object detection indicator (object Abandoned/Missing) (not applicable to **GV-GFER6900**)
	Zoom out		Crowd density indicator (only for **GV-GFER6900**)
	AZ control (only for **GV-GEBF4911**)		Heat map indicator

Icon	Description	Icon	Description
	PTZ control		Loitering detection indicator (not applicable to **GV-GEBF4911 / GFER6900**)
	Face Detection (not applicable to **GV-GFER6900**)		Illegal parking detection indicator (not applicable to **GV-GEBF4911 / GFER6900**)
	Rule information display		Video metadata extraction indicator (not applicable to **GV-GFER6900**)

For detailed information, see *Chapter 3 Live View* in the user's manual.

5. Upgrading System Firmware

GeoVision periodically releases updated firmware on the company website. To load the new firmware into the camera, follow the instructions below.

1. On the Web interface, click **Config** > **Maintenance** > **Upgrade.**

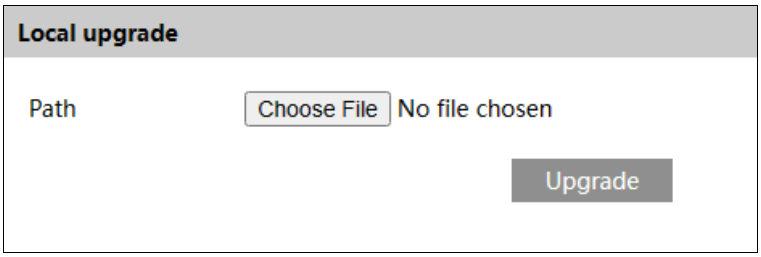

2. Click the **Choose File / Browse** button to locate the firmware file saved at your local computer.
3. Click the **Upgrade** / **Back up and upgrade** button to start upgrading the firmware.
4. After upgrading, the camera will restart automatically.

Note:

1. Do not allow downgrading from the current version to the lower version.
2. Do not close the browser or disconnect the camera from the network during the upgrade.
3. If “Back up and upgrade” is selected, the configuration file will be exported to your local PC before starting upgrading.

6. Restoring to Factory Default

If for any reason the camera is not responding correctly, you can restore the camera back to its factory default settings using the Web interface or the Load Default Button.

On the Camera

1. Find the **Load Default** button on the camera (see *Chapter 1 Overview*).
2. Press and hold the button for more than 10 seconds to restore to the factory default setting.

On the Web Interface

For GV-GEBF4911

1. On the Web interface, click **Config** >**Maintenance** > **Backup and Restore**.
2. Click the **Load Default** button to restore all system settings to factory default, except the image settings (see *4.2 Image Configuration* in the user's manual for details) you want to keep.

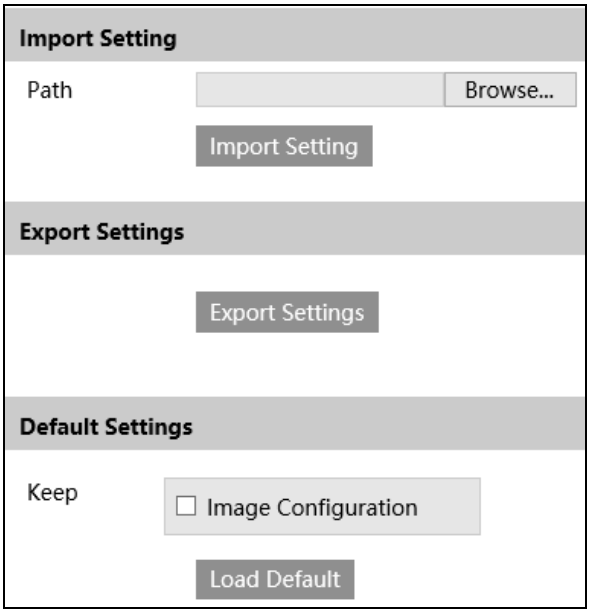

For GV-GBL4900 / GBL4911 / GDR4900 / GEB4900 / GFER6900 / GVD4910

1. On the Web interface, click **Config** >**Maintenance** > **Backup and Restore**.
2. Click **Restore Factory Settings** and then verify the password to restore all system settings to the default factory settings.

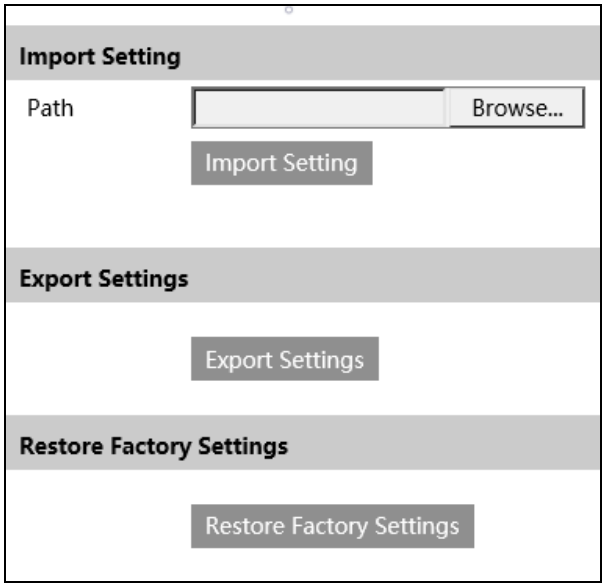

7. Connecting to GV-Cloud VMS

To connect the camera to GV-Cloud VMS, follow the steps below.

Note:

1. **Motion Detection** is required for GV-Cloud connection. The event is enabled by default for the following scenarios:
   i. When the camera is successfully connected to GV-Cloud
   ii. When the camera reconnects to GV-Cloud after disconnection
   iii. When the camera is rebooted after connecting to GV-Cloud
2. The following events are supported on GV-Cloud VMS:
   A. **GV-GBL4900 / GBL4911 / GDR4900 / GEBF4911 / GFER6900 / GVD4910:** Motion Detection, Line Crossing, Region Entrance, Region Exiting, Region Intrusion, Video Exception (Scene Change / Video Blur Detection), I/O events
   B. **GV-GEB4900:** Motion Detection, Line Crossing, Region Entrance, Region Exiting, Region Intrusion, Video Exception (Scene Change / Video Blur Detection)
3. When connecting to GV-Cloud VMS, avoid connecting to other GV-Software at the same time.

On GV-Cloud

1. Finish the sign-up procedures on GV-Cloud and sign in.
2. Add the license plans you have purchased.
3. Click the GV-Cloud icon → **Cloud VMS**.

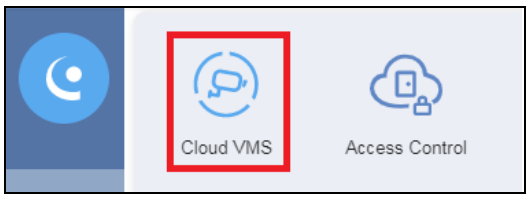

4. Select **Host** in the left menu, and click + in the upper right corner. This dialog box appears.

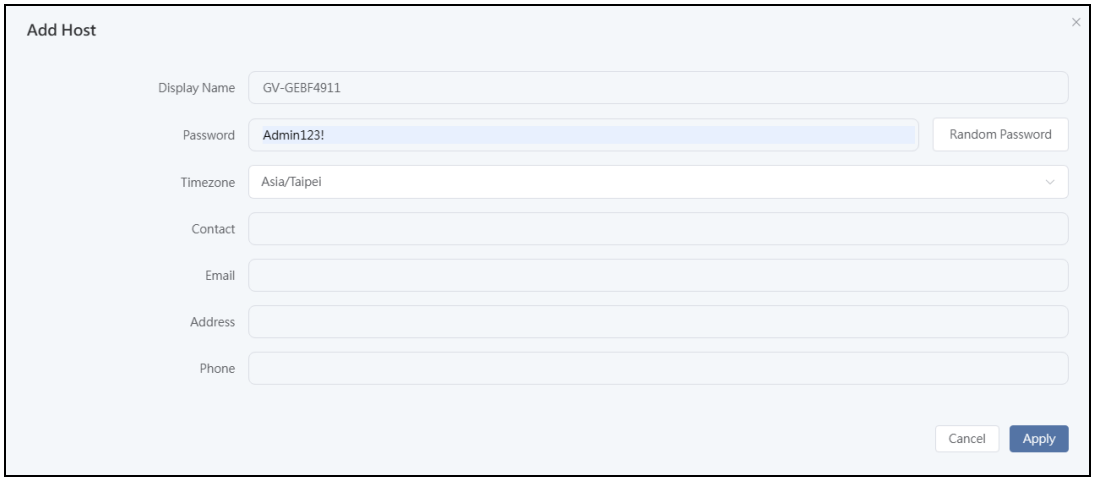

5. Type **Display Name, Password** (to be the host's GV-Cloud login password), and select **Time Zone** for the host. The rest information is optional.

6. Click **Send**. The message "Host has been added" will appear. Keep the created **Host Code** and **Password** for connecting to GV-Cloud on the camera.

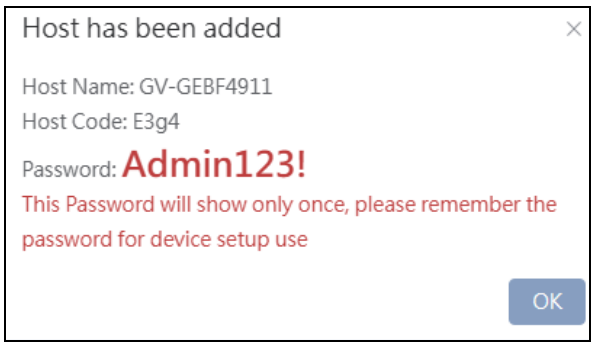

On the Camera's Web Interface

1. Go to **Config** > **Service** > **GV-Cloud**.

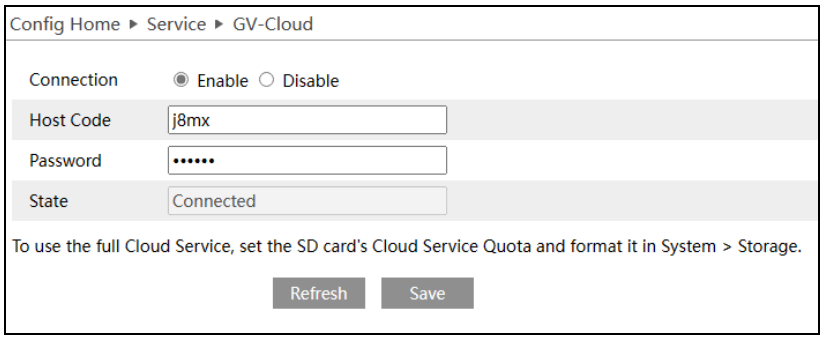

2. Enable the Connection and fill in the **Host Code** and **Password**.

3. Click **Save** and **Refresh** to set up and refresh the connection.

4. Go to **Config** > **System** > **Storage** to set up the service quota from the camera's SD card for the snapshots and recordings uploaded onto GV-Cloud VMS. For details, see *4.1.4 Storage* in the user's manual.

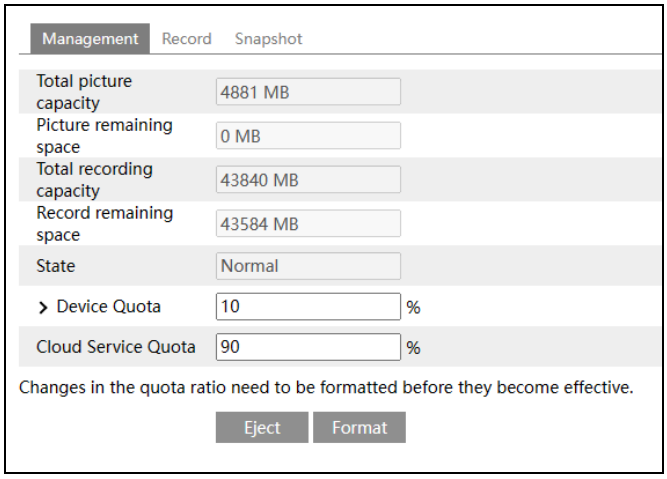

Note: It is recommended to set the Cloud Service Quota to 90% to prioritize cloud storage over the camera's storage.

8. Connecting to GV-Center V2

To connect to GV-Center V2, follow the steps below:

Note: The following events are supported on GV-Center V2:

1. **GV-GBL4900 / GBL4911 / GDR4900 / GEBF4911 / GFER6900 / GVD4910:** Motion Detection, Line Crossing, Region Entrance, Region Exiting, Region Intrusion, Video Exception (Scene Change Detection), I/O events
2. **GV-GEB4900:** Motion Detection, Line Crossing, Region Entrance, Region Exiting, Region Intrusion, Video Exception (Scene Change Detection)

On GV-Center V2

Create at least one subscriber before starting Center V2 services. See *1.4.1 Creating a Subscriber* in the *GV-CMS Series User's Manual*.

On the Camera's Web Interface

1. Go to **Config** > **Service** > **GV-Center V2**.

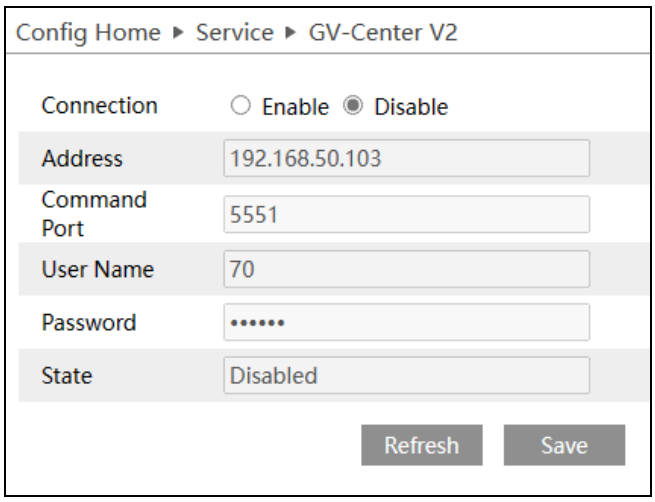

2. Enable the Connection and enter the IP Address of GV-Center V2, User Name, and Password set up in GV-Center V2 for the camera as a subscriber.
3. Click **Save** and **Refresh** to set up and refresh the connection.