XE360™ Series

Wireless Mortise Lock

Overview

Building upon the innovation and reliability of Schlage electronic locks, the XE360 Series is the next generation of wireless locks from this trusted brand. The sleek design offers customers a solution that looks as good as it performs – at an affordable price point.

XE360 currently works within No-Tour or offline access control systems. Credential support includes smart, Bluetooth and NFC mobile[1].

The open architecture design of the XE360 allows it to be managed by Allegion software or be integrated into popular physical access control and Proptech systems through our PACS Alliance program. This enables customers to choose what best fits their requirements now and transition to another solution at any time.

The XE360 Series is also available as tubular or exit trim and suites with other Schlage families to provide a wide selection of attractive options to meet the requirements of nearly any opening.

Encryption Key & Credential Interoperability

- Hardware configured with our default encryption key or custom key developed by Schlage Custom Encryption Key Service (SCEKS) including NXP and NFC
- Schlage MIFARE® DESFire® and MIFARE Classic® credentials
- NFC mobile credentials in Apple Wallet® and Google Wallet™
- Schlage Mobile Bluetooth® Credential
- Other competitive credentials

Schlage Credential Services

- CardTrax™ credential format sequencing service offering industry standard formats
- Custom format development

Features & Benefits

- Next level design inside and out
- Credential support includes Schlage MIFARE®, Bluetooth® and NFC mobile[1]
- Available with LED indicator, interior push button, or deadbolt with thumbturn
- Advanced encryption keeps data and communications safe
- Wireless configuration using connected smartphones or tablets
- No-Tour or offline system capability
- Ready for the future with the innovative FleX Module™ that allows for communication type, memory and encryption upgrades
- Utilizes a heavy-duty Grade 1 mortise chassis for exceptional quality and reliability
- Open architecture – interoperable and simple for software alliances to integrate
- Works seamlessly with other Schlage wireless locks, including Schlage Control[2]
- Uniquely concealed key override standard on all locks

1. Dependent on access control software provider support of specific mobile credentials.
2. Check with your Proptech or PACS provider for specific support.

CYBERSECURITY
Learn about Allegion's commitment

Exterior

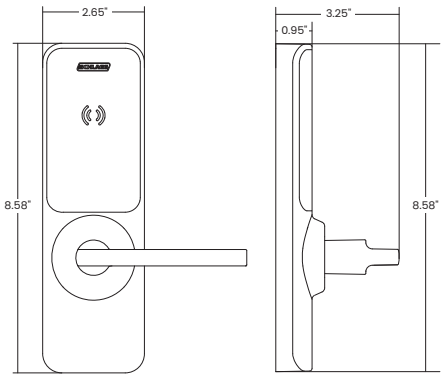

Interior

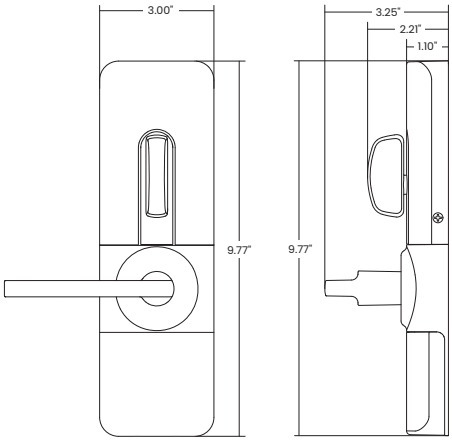

Profile

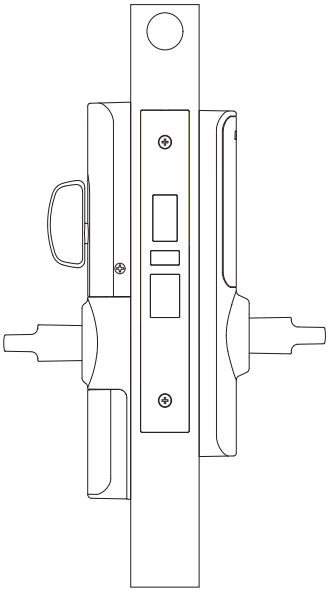

XE360 Wireless Electronic Lock Specifications	
Users	2,000[1]
Audits	2,000[1]
Visual communications	LED (red, amber, green, blue)
Audible communications	Yes, field configurable
Communication and encryption standards – lock	Bluetooth® Low Energy (version 5) Advanced Encryption Standard (AES), 128- and 256-bit
Communication and encryption standards – mobile credentials	Bluetooth® Low Energy: AES 256-bit using CBC & ECDSA 256
Credential verification time	Smart: ≤ 1 second Mobile: mobile device dependent
System interface	Via Bluetooth using the ENGAGE mobile app compatible with iOS and Android
Battery life[2]	Up to two 2 years 4 AA batteries, included
Operating temperature	Exterior: -31° to 151°F (-35° to 66°C) Interior: 32° to 120°F (0° to 49°C)
Operating humidity	0 - 100% non-condensing
Certifications	ANSI/BHMA A156.13-2022; ANSI/BHMA A156.25-2023 Locked Outdoor Type; ANSI/BHMA A156.5-2020; UL 294; ULC 60839; UL 10C 3-hour; CAN/ULC S104 3-hour; FCC Part 15; Industry Canada (IC); Industry Canada (IC)-RSS210; ADA Compliant[3]; RoHS; REACH; TAA; FL12400; FL4613; FL1592; FL14482; FL10356; FL3905[4]

Functionality[5]

- With Indicator (I)
  - Storeroom
- With Button (B)
  - Office
  - Privacy
  - Apartment
- With Deadbolt (D)
  - Privacy
  - Apartment

Note: Door Position Sensor is recommended for privacy and apartment functions.

Available Status Signals[5]

- Battery level
- Door position
- Lock/unlock
- Request-to-exit
- Mortise deadbolt[4]

Connectivity Options

- Mobile (Bluetooth at the lock)
- No-Tour[6]

1. Maximum storage capacity of lock; can vary by access control software.
2. Assuming default settings, 40 actuations per day.
3. See 'Lever Styles' section for available options.
4. Mortise deadbolt (D) chassis only.
5. Consult your access control software provider for specific scope of support.
6. With MT20W and smart credential or mobile credential (consult your access control software provider for specific support).

XE360 Mortise Mechanical Specifications	
Chassis	Mortise
Handing	On-site handing with included hex key
ANSI standard (Meets or exceeds)	ANSI/BHMA A156.13-2022 ANSI/BHMA A156.25-2023 Locked outdoor type ANSI/BHMA A156.5-2020
Door thickness	1-3/4" (44mm)
Backset	2-3/4" (70mm)
Latchbolt	Standard: 3/4" (19mm) throw stainless steel latch bolt with anti-friction tongue
Deadbolt	1" (25mm) throw, stainless steel
Armored front	1-1/4" x 8" x 7/32" (32mm x 203mm x 6mm) only
Strike	Standard: 1-3/16" (30mm) curved lip, ANSI, 1-1/4" x 4-7/8" (32mm x 124mm); no box Optional: Additional strike lip lengths and ANSI strike box available
Levers	Zinc
Stile width	Minimum 4-1/2" (114mm)
Materials	All-metal chassis and escutcheon; exterior polycarbonate elements
Cylinder and keys	Schlage Classic C keyway, Conventional 6-pin cylinder with two keys

Reader Specifications	
Credential technologies	Smart (13.56 MHz), Bluetooth Low Energy (LE) (2.4 GHz), and Near Field Communication (NFC)
Standards	ISO standard 15693 and ISO 14443
Read range	Smart: up to .5" Bluetooth® Low Energy: up to 15' NFC: mobile device dependent
Smart credential support	**Secure application area:** Schlage MIFARE DESFire® EV1/EV2/EV3, Schlage MIFARE® Classic® **CSN only:** HID iCLASS®, HID iCLASS SE®, MIFARE DESFire/Classic
Mobile credential support[1]	Schlage Mobile Bluetooth Credential, Integrated PACS mobile credential with Bluetooth, NFC mobile credentials in Apple Wallet® and Google Wallet™

1. Dependent on PACS provider capabilities. Visit us.allegion.com/alliances for more information.

Chassis Options

The XE360 Series portfolio offers tubular, mortise, mortise deadbolt and exit trim solutions to fit the needs of most applications.

Key Override

Key override is standard on all XE360 locks. The unique design conceals the cylinder in the bottom edge of the lock to preserve the sleek look on the door while still allowing emergency access using a key.

Ordering Information

XE360	- M	- OF	- I	- SM	- LAT	- 626	- P6	- C	- 09-663	- 10-072	- 134	- 47467230
Series	Chassis	Class	Function	Reader	Lever Style	Finish	Key Cylinder	Keyway	Armored Front	Strike	Door Thickness	Accessories
1	2	3	4	5	6	7	8	9	10	11	12	13

Selections correspond with the numbers above. See price book for specific configuration options.

4 Function	
I	Indicator
B	Button
D	Deadbolt

5 Reader	
SM	Smart; Bluetooth and NFC mobile

6 Lever Style	
BRW	Broadway
LAT	Latitude
NEP	Neptune
LON-E	Longitude-extended length

7 Finish	
619	Satin Nickel
622	Matte Black
626	Satin Chrome

8 Key Cylinder	
P6	Schlage Conventional, 6-pin

9 Keyway	
C	Schlage Classic Obverse

10 Armored Front	
	1-1/4" x 8" x 7/32"
09-663	For indicator and button
09-666	For deadbolt

11 Strike	
10-072	1-3/16" curved lip, ANSI, 1-1/4" x 4-7/8"; no box

See price book for additional strike lip lengths and ANSI strike box options.

12 Door Thickness	
134	1-3/4" only

13 Accessories	
47467230	Door Position Switch (DPS)
LLLDPS	Less Door Position Switch (DPS)

Lever Styles

Broadway

Latitude

Neptune (Sparta)

Longitude - Extended Length

Extended length lever is designed to lower required operational force and improve rotational grip for higher accessibility.

Finishes

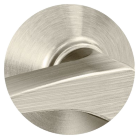

619
Satin Nickel

622
Matte Black

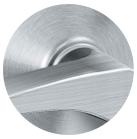

626
Satin Chrome

Allegion, the Allegion logo, Schlage and the Schlage logo are trademarks of Allegion plc, its subsidiaries and/or affiliates in the United States and other countries. The HID, iCLASS, and iCLASS SE trademarks owned by ASSA ABLOY. MIFARE and DESFire are registered trademarks of NXP B.V. All other trademarks are the property of their respective owners.

© 2024 Allegion plc

015589, Rev. 10/24