# FRH-1015

**Pedestal hood**

Hood Features :
- 0.081" aluminum housing
- 0.188" polycarbonate surface front plate
- Hood attaches to pole mount with 4 screws (provided)
- Concealed cables
- Six tamperproof bolts available in option for the hood.
- Four hood sizes available

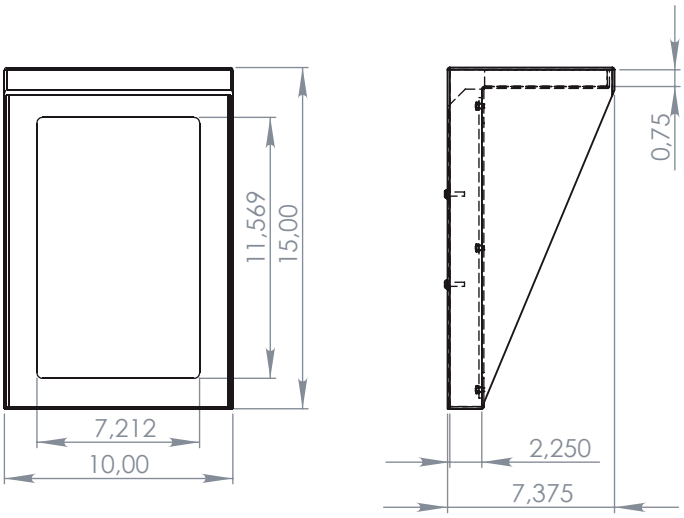


| **Fabrication :** | |
|---|---|
| Body : | All aluminum, 12 Ga. , #3003-H14 alloy |
| Finish : | White polyurethane coating |

| **External Dimensions :** | |
|---|---|
| Width : | 10.00" (254 mm) |
| Height : | 15.00" (381 mm) |
| Depth : | 7.375" (187 mm) |

| **Similar products :** | | |
|---|---|---|
| FRH-0808 : | Hood 8"x 8" | (W-H) |
| FRH-1317 : | Hood 13"x 17" | (W-H) |
| FRH-2316 : | Hood 23"x 16" | (W-H) |

**Mounting accessories:**

FRP-43: Pedestal mount 43"
FRP-60: Pedestal mount 60"
FRP-84: Pedestal mount 84"
FRP-96: Pedestal mount 96"
FRP-8443: Dual Pedestal mount 84" & 43"
FRP-9643: Dual Pedestal mount 96" & 43"
FRP-70D: Dual Pedestal mount 70"
FRP-H-11: Pedestal wall mount 11"

BATKO, 485 François-Gignac, Portneuf, Qc., G0A 2Y0
Tel.: 1-800-463-1455, 1-418-286-6842 / Fax: 1-800-261-3514, 1-418-286-4201
www.batko.com / E-mail: batko@batko.com

Specifications subject to change without notice.
© BATKO Copyright. All rights reserved.
Pb Totally lead free product.