Cable Management

Vertical Cable Manager

Rack Mounted Cable Management Rings

Features

- Vertical rings mount to the side of a relay rack to provide cable management
- Steel construction provides ample strength for heavy cable loading

Ordering Information

Width	Depth	Catalog Number	UPC
6"	10"	MCCVMR2	662620801773

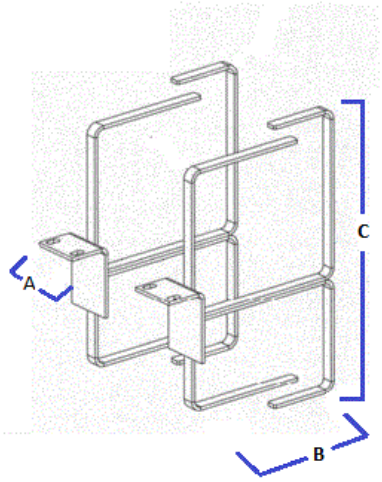

Specifications

Material	Steel
Gauge	11
Finish	Black Powder Coated

Characteristics

Installation	Mounts off of relay rack rail

Accessories

Black Velcro Roll	**HVFBK575**
9" Velco Strips, Yellow	**MCCMV9YL10**

Dimensions- inches (mm)

Height	0.5" (13)
Width	6" (152)
Depth	10" (254)

Online Resources

Customer Use Drawing
eCatalog