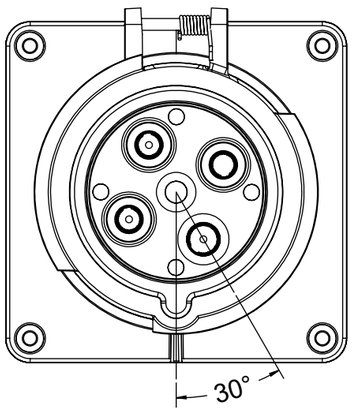

VIEW WITHOUT LID
5 O'CLOCK POSITION

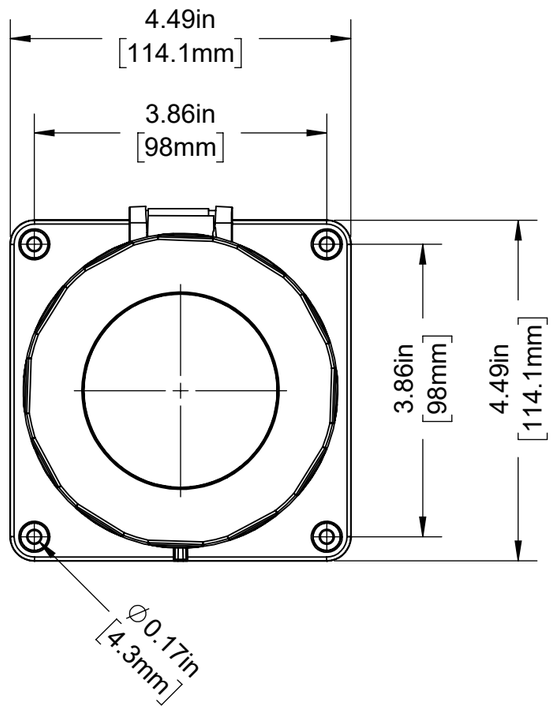

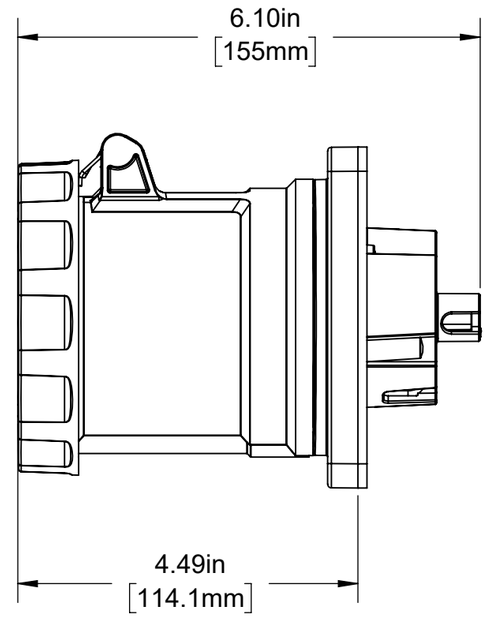

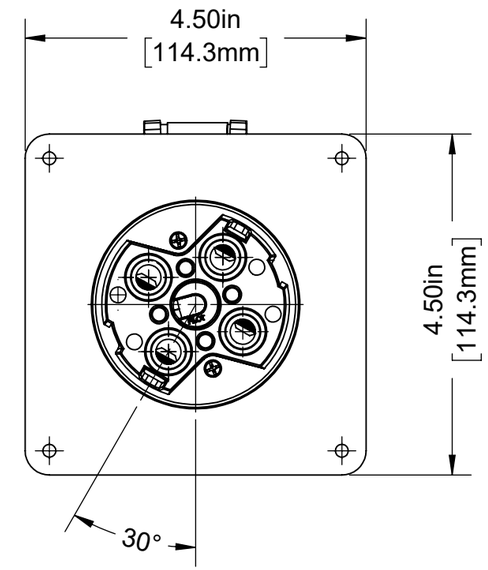

CATALOG # 460R5WLEV

60 AMP, 600 VOLT 3-PHASE, 3 POLE, 4 WIRE,
LEV SERIES NORTH AMERICAN-RATED IEC 60309-1
& 60309-2, PIN & SLEEVE RECEPTACLE,
IP66/IP67/IP68/IP69K, WATERTIGHT, BLACK

UNLESS OTHERWISE SPECIFIED: DO NOT SCALE DRAWING. ALL DIMENSIONS ARE IN INCHES. ALL ANGLES ARE IN DEGREES.	LEVITON®		
TOLERANCES	TITLE: 460R5W 60A RECEPTACLE CATALOG DRAWING		
INCH: .XX ± .01, .XXX ± .005 / METRIC: .X ± .2 mm, .XX ± .1 mm			
ANGLES: ± 1/2°	DWG NO. CATSTD-460R5W-LEV-D01		
THIRD ANGLE PROJECTION			
ALL PRINTED COPIES ARE UNCONTROLLED	SIZE B	SCALE:1:2	SHEET 1 OF 1	REV 1

Copyright 2020. Unpublished. All Rights Reserved.