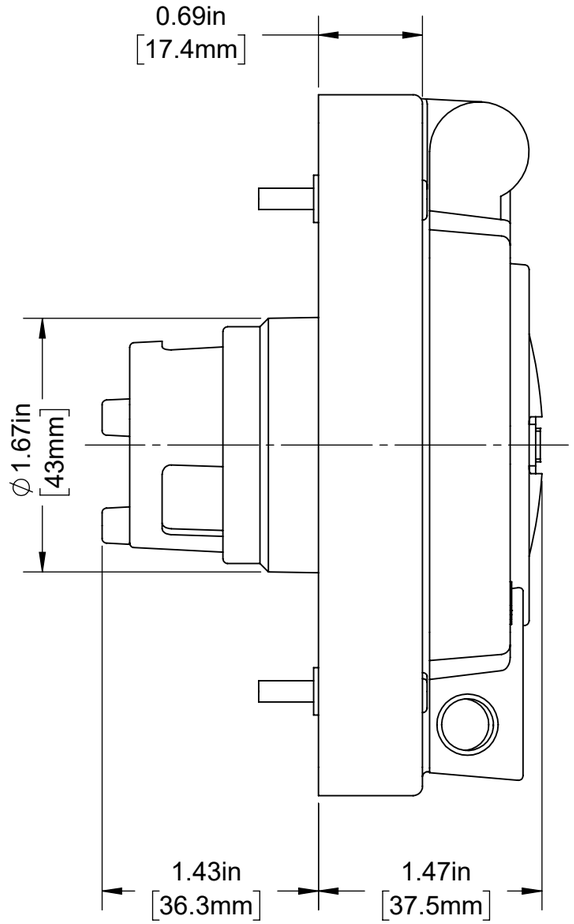

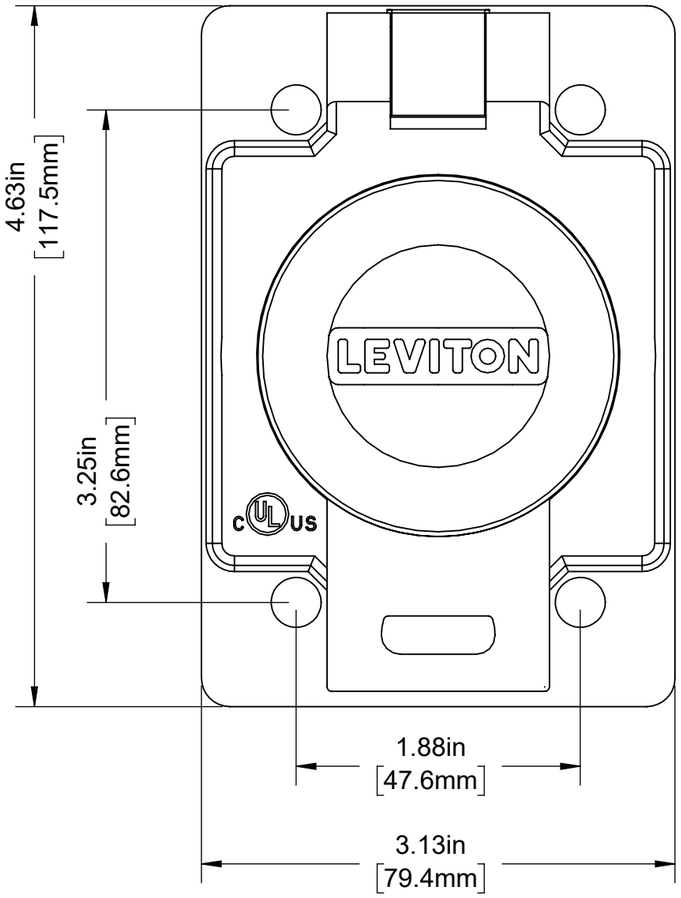

NON-NEMA 15A/125V 10A/250V
3 POLE 3 WIRE, NON-GROUNDING

COVER OPEN

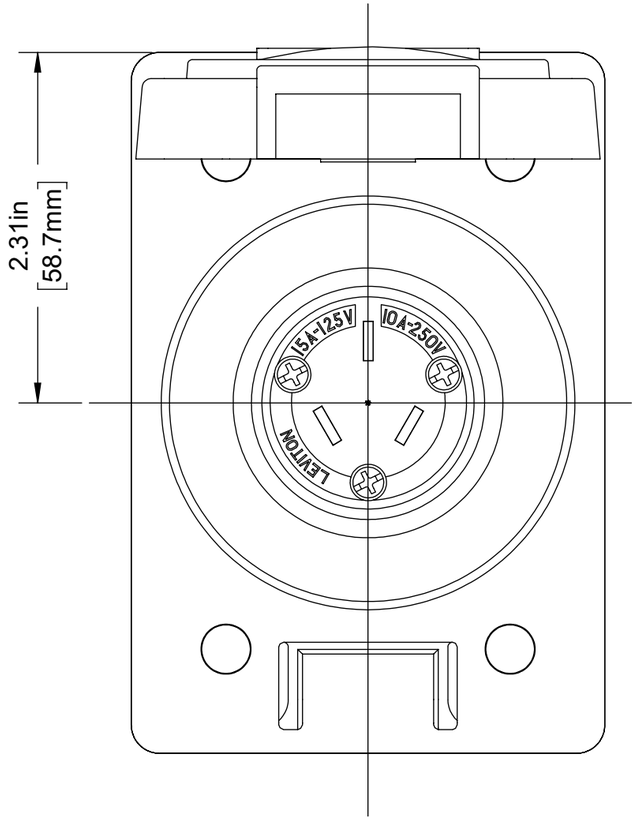

15A WETGUARD FLANGED INLET COVER
for Catalog No 64W07

UNLESS OTHERWISE SPECIFIED: DO NOT SCALE DRAWING. ALL DIMENSIONS ARE IN INCHES. ALL ANGLES ARE IN DEGREES.	LEVITON®
TOLERANCES INCH: .XX ± .01, .XXX ± .005 METRIC: .X ± .2 mm, .XX ± .1 mm	TITLE: 64W07 WETGUARD NON-NEMA F.I. 15A/125V 10A/250V
ANGLES: ± 1/2° THIRD ANGLE PROJECTION	DWG NO. CATSTD-64W07-000-D01
ALL PRINTED COPIES ARE UNCONTROLLED	SIZE B · SCALE:1:1 · SHEET 1 OF 1 · REV 1
	Copyright 2019. Unpublished. All Rights Reserved.