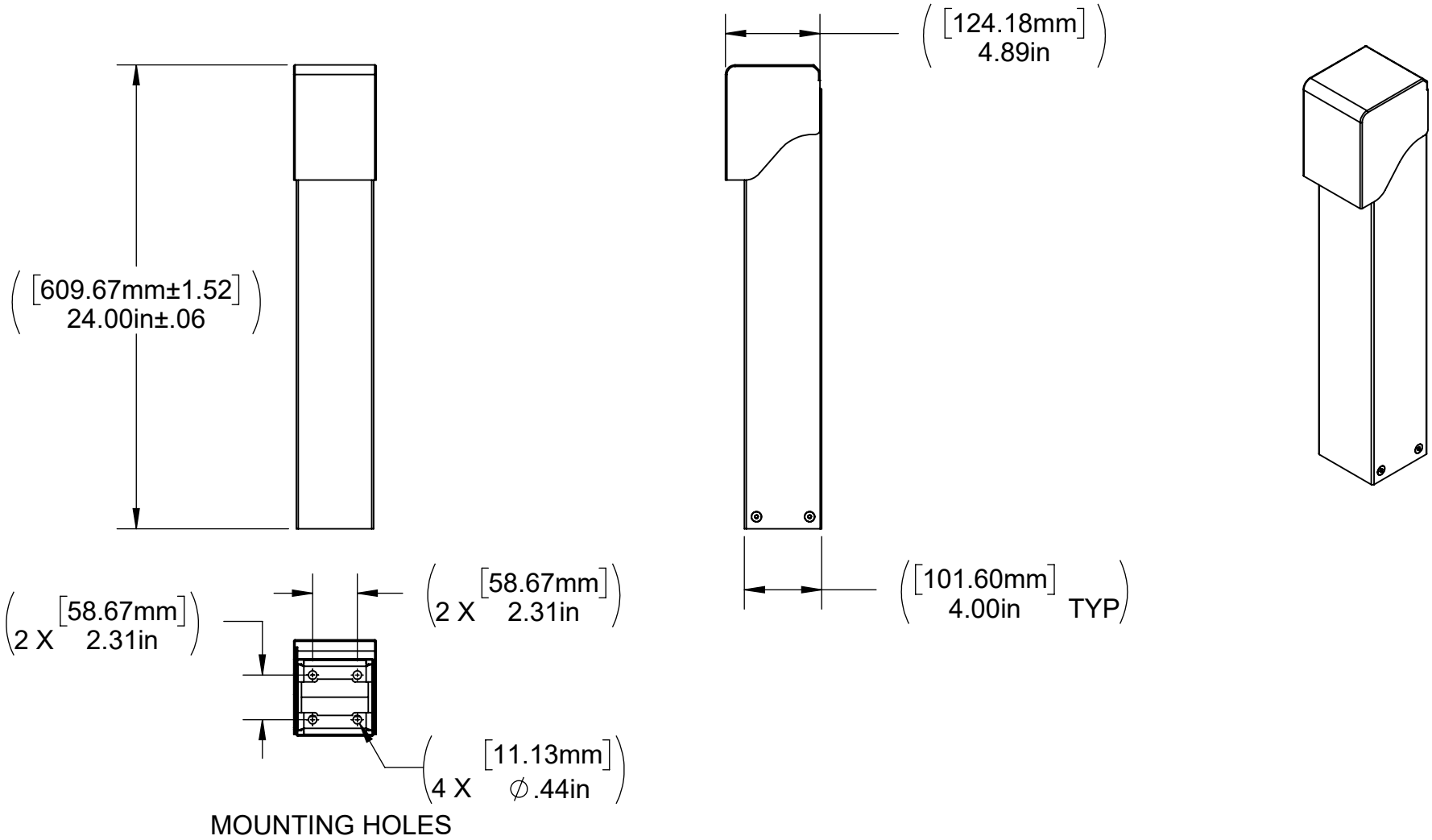

STATUS: Production Release

REV.	DATE	ECO NUMBER	CHGD	APVD
A	05/23/2023	NEW RELEASE	JC	VB
-	-	-	-	-
-	-	-	-	-
-	-	-	-	-
-	-	-	-	-

LEVITON®

The information in this document is the exclusive **PROPRIETARY** property of **LEVITON MFG. CO., INC.** It is disclosed with the understanding that acceptance or review by the recipient constitutes an undertaking by the recipient: (1) to hold this information in strict confidence. (2) not to disclose, duplicate, copy, or use the information, in whole or in part, for any purpose other than that for which disclosed.

Copyright 2016. Unpublished. All Rights Reserved.

UNLESS OTHERWISE SPECIFIED:
DO NOT SCALE DRAWING.
ALL DIMENSIONS ARE IN INCHES.
ALL ANGLES ARE IN DEGREES.

TOLERANCES

INCH		METRIC	
.XX	± .030	.X	± .8 mm
.XXX	± .015	.XX	± .4 mm

ANGLES: ± 1/2°

THIRD ANGLE PROJECTION

ALL PRINTED COPIES ARE UNCONTROLLED

TITLE:

PEDESTAL 24", 1 GANG FLUSH, HINGED, NO BASE

DWN BY	JC	05/22/2023	ENGRG	VB	07/13/2023
CHK BY	VB	07/13/2023	MFG	VB	07/13/2023

DWG NO. ORC2753-D01

SIZE	PROJECT NO. PROJ-03626		REV
A	SCALE:1:8	SHEET 1 OF 1	A