LEVITON®

Dual-Relay Decora® Wall Switch PIR Occupancy Sensor



ODS0D-ID

BASIC OPERATION

The Leviton Dual-Relay Decora Wall Switch Passive Infrared (PIR) Occupancy Sensor (ODS0D) uses PIR technology to monitor a room for occupancy through a segmented Fresnel lens. This specialized lens divides the field-of-view into sensor zones. When a person passes into or out of a sensor zone, the sensor detects motion and switches two separate lighting loads ON. The lights will remain ON as long as there is an occupant moving through the sensor zones.

The ODS0D has an adjustable 30 minute time delay setting for the first and second relay that can be used to comply with 2016 Title 24, Part 6 occupancy sensing requirements.

APPLICATIONS

Leviton's ODS0D Dual-Relay Decora Wall Switch Passive Infrared (PIR) Occupancy Sensor is used to provide automatic lighting control for energy savings and convenience in a variety of commercial applications, including:

- Classrooms
- Conference rooms
- Offices
- Multimedia rooms
- Day care centers
- Lounges
- Daylight harvesting
- Bi-level or A/B switching

The ODS0D provides automatic switching of two separate lighting loads from a single unit. It is compatible with incandescent, fluorescent and low-voltage lighting. The unit features dual manual-override switches that can be used to toggle the ON/OFF status of each lighting load while an area is occupied. The ODS0D can be installed in place of two single-pole wall switches and fits in a standard single-gang wall box. The unit requires a ground connection for proper operation.

FEATURES

- Provides automatic switching for two separate banks of fluorescent, incandescent, or low-voltage lighting from a single unit
- Convenient dual pushbuttons provide manual-ON/OFF light switching of each load at any time
- ODS0D-ID Conference Room Mode—primary and secondary relays switch lighting to last ON/OFF status when personnel enter room, providing a consistent lighting level from one occupancy period to the next. Both relays respond to Ambient Light Override, preventing lights from turning ON automatically during periods of ample natural light, for increased energy savings.
- ODS0D-ID Classroom Mode—both primary and secondary relays always switch lighting ON when personnel enter room, regardless of their ON/OFF status during last period of occupancy. Secondary relay only responds to Ambient Light Override—primary does not, ensuring that students and personnel never enter a darkened room.
- Presentation Mode feature for slide or film presentations allows push buttons to turn lights OFF and keep them OFF while the room is occupied
- Auto adapting delayed-OFF time interval compensates for real-time occupancy patterns, preventing unnecessary ON/OFF switching
- Exclusive Walk-Through feature provides increased energy savings by not leaving the lights ON for an extended period after only momentary occupancy
- Non-Adaptive Mode disables Self-Adjusting Delayed-OFF Time and Walk-Through feature in applications where these features are not desired.
- Daylight harvesting light sensor measures the ambient light in the room when it first detects motion. It leaves the lights OFF if there is enough light in the room or turns the lights connected to the first relay ON if there is not enough light in the room.
- Low-profile design eliminates obtrusive "scanning-device" look. Elegant Decora wallplates complement any interior for sleek aesthetics; uses Decora wallplates and coordinates with Leviton's popular line of Decora wiring devices.
- 180° field-of-view provides approximately 2100 square feet of coverage, suitable for a variety of commercial areas
- Segmented Fresnel lens provides optimum sensitivity and performance. Designed with an extensive "minor motion" area where even slight body movements will be detected.
- Patented blinders: horizontal field-of-view may be adjusted between 180° and 60° arc by using integral blinders located on either side of the lens. No masking tape required.

Leviton Manufacturing Co., Inc. Lighting & Controls
201 North Service Road, Melville, NY 11747-3138 **tech line** 800-824-3005 **fax** 800-832-9538
©2023 Leviton Manufacturing Co., Inc. All rights reserved. Subject to change without notice.

PRODUCT DATA

- Time delay adjustment for delayed-OFF time settings of 30 seconds, 5, 10, and 30 minutes. Allows customized adjustments to maximize energy savings.
- Vandal resistant PIR lens
- False detection circuitry
- Light Sensor adjustable Ambient Light Override ranges from approximately 2FC (20 LUX) to 500+FC (5000+ LUX)
- Manual-ON/auto-OFF mode for installations where manual-ON switching is required but auto-OFF switching is still desired
- Red LED indicator light flashes when PIR sensor detects motion to verify detection is active and can be used to comply with 2016 Title 24, Part 6 occupancy sensing requirements
- Beep warn—unit beeps 3 times after delayed-OFF time expires, then waits 10 seconds before turning lights OFF
- One unit can be used for 120V through 277V lighting. Compatible with both electronic and magnetic ballasts.
- Primary relay switches at the zero crossing point of the AC power curve to ensure longer contact life and compatibility with electronic ballasts
- Unit fits in standard single-gang wallbox and replaces two single-pole wall switches; ground connection required. Gangable with other devices
- Exclusive Leviton H.I.S. Circuitry. Specifically designed to handle today's high inrush electronic ballast loads and offer unmatched durability and service.

OPERATION IN CONFERENCE ROOM MODE (ODS0D-ID)

	Lighting status during occupancy	**Ambient Light Override**	**Room vacant, delayed-OFF time expires Lighting status when personnel re-enter darkened room**	**Room vacant, delayed-OFF time expires Lighting status when personnel re-enter room with ample natural lighting**
1	Primary: ON Secondary: ON	Not Set	Primary: ON Secondary: ON	Primary: ON Secondary: ON
2	Primary: ON Secondary: ON	Set	Primary: ON Secondary: ON	Primary and Secondary remain OFF due to light override
3	Primary: ON Secondary: OFF	Not Set	Primary: ON Secondary: OFF	Primary: ON Secondary: OFF
4	Primary: ON Secondary: OFF	Set	Primary: ON Secondary: OFF	Primary and Secondary remain OFF due to light override
5	Primary: OFF Secondary: ON	Not Set	Primary: OFF Secondary: ON	Primary: OFF Secondary: ON
6	Primary: OFF Secondary: ON	Set	Primary: OFF Secondary: ON	Primary and Secondary remain OFF due to light override
7	Both Primary and Secondary turned OFF for viewing mode	Not Set	Primary: ON Secondary: OFF	Primary: ON Secondary: OFF
8	Both Primary and Secondary turned OFF for viewing mode	Set	Primary: ON Secondary: OFF	Primary and Secondary remain OFF due to light override

OPERATION IN CLASSROOM MODE (ODS0D-ID)

	Lighting status during occupancy NOTE: Previous status does not in Class Room Mode	**Ambient Light Override**	**Room vacant, delayed-OFF time expires Lighting status when personnel re-enter darkened room**	**Room vacant, delayed-OFF time expires Lighting status when personnel re-enter room with ample natural lighting**
1	Not applicable	Not Set	Primary: ON Secondary: ON	Primary: ON Secondary: ON
2*	Not applicable	Set	Primary: ON Secondary: ON	Primary: ON Secondary: OFF (Secondary responds to light override

*Example Number 2, with the Ambient Light Override set, is more typical of the Classroom Mode.

FIELD-OF-VIEW

The ODS0D provides a 180° field-of-view with a maximum coverage area of approximately 2,100 square feet. The maximum sensing distance in front of the sensor is 40 feet, and at each side is 30 feet. The "minor motion" zone detects relatively small body movements and allows the lights to stay ON even though a person may not be moving or walking around the room. The remainder of the field-of-view, the "major motion" zone, exhibits a lesser degree of sensitivity and requires larger movements.

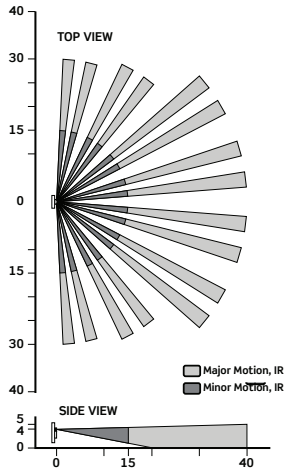

ODS0D-ID/-TD
Field-of-View (in feet)

INSTALLATION

The ODS0D is designed to control two separate lighting loads for bi-level or A/B switching (inner and outer banks of fluorescent lighting or separate banks of incandescent lighting) in the area it is monitoring. The light sensor Ambient Light Override is an important energy-saving, daylight harvesting feature that also distinguishes the functioning of the Conference Room and Classroom modes (see "Operation Modes"). The Ambient Light Override should always be adjusted during the time of day when the ambient light is at a level where no additional lighting is required. Exclusive auto-adapting operating features will automatically compensate for real-time occupancy patterns to provide maximum convenience and energy savings.

The ODS0D mounts in a standard single-gang wallbox and will replace two single-pole wall switches that control two separate lighting loads. The unit must be properly grounded in order to operate. The unit's patented integral blinders may be used to restrict the field of view to prevent unwanted detection of hallway traffic. No masking tape required.

The ODS0D should be positioned at least 6 feet away from HVAC registers. The switch located under the push-button provides three operational settings: "ON" turns the lighting load ON indefinitely (motion detection not active), "OFF" disconnects the lighting load from the power for relamping purposes, and "AUTO" activates automatic motion detection. Note that whenever the unit is powered up, it will take approximately 1 minute to begin normal operation.

WIRING DIAGRAMS

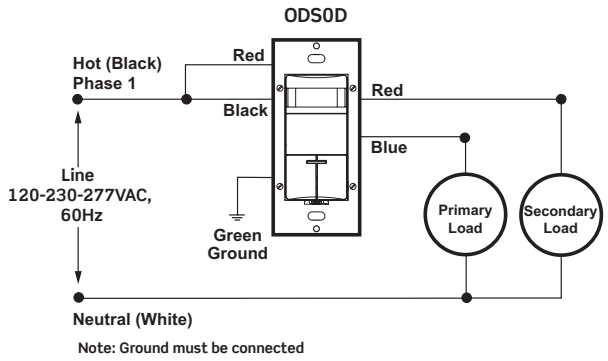

ODS0D-ID Wiring Diagram for Single Pole Application—Single Phase

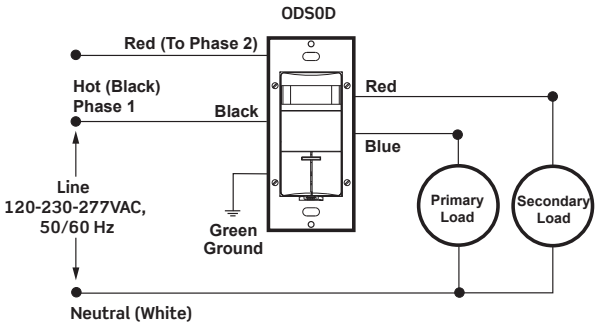

ODS0D-ID Wiring Diagram for Single Pole Application—2 Phase

Leviton Manufacturing Co., Inc. Lighting & Controls
201 North Service Road, Melville, NY 11747-3138 **tech line** 800-824-3005 **fax** 800-832-9538
©2023 Leviton Manufacturing Co., Inc. All rights reserved. Subject to change without notice.

PRODUCT DATA

LEVITON®

ODS0D

SPECIFICATIONS

ELECTRICAL		
Line Voltage	120-230-277 VAC	
Power Consumption	120V - 110mW 277V - 270mW	
Operational Frequency	50/60 Hz	
Wire Designation	Primary Relay— No. 16 AWG leads: Line—Black Load—Blue Ground—Green	Secondary Relay— N0. 18 AWG isolated contact leads: (2) Red
Load Rating	Primary Relay— Fluorescent: 1200VA @ 120V 2700VA @ 277V Incandescent: 800W @ 120V	Secondary Relay— Fluorescent: 800VA @ 120V 1200VA @ 277V Incandescent: 800W @ 120V

ENVIRONMENTAL	
Operating Temperature Range	32-122°F (0-50°C)
Storage Temperature Range	-50-185°F (-10-85°C)
Relative Humidity	20% to 90% non-condensing

OTHER	
Listings	CUL/US Certified
Energy Codes	Can be used to comply with IECC, ASHRAE 90.1, and 2019 Title 24, Part 6 occupancy sensing requirements
Warranty	Limited Five-Year Warranty

ORDERING INFORMATION

CAT. NO.*	DESCRIPTION
ODS0D-ID	Dual-Relay Decora Wall Switch Occupancy Sensor for 120/277 VAC applications

* To indicate color, add suffix to the end of the catalog number.
White (-W), Ivory (-I), Light Almond (-T), Gray (-G), Ebony (-E), and Red (-R)
Made in USA with globally sourced components and NAFTA compliant models available.

DIMENSIONAL DIAGRAMS

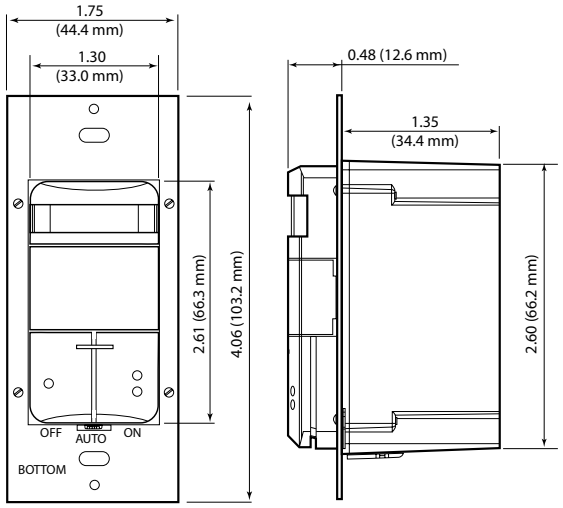

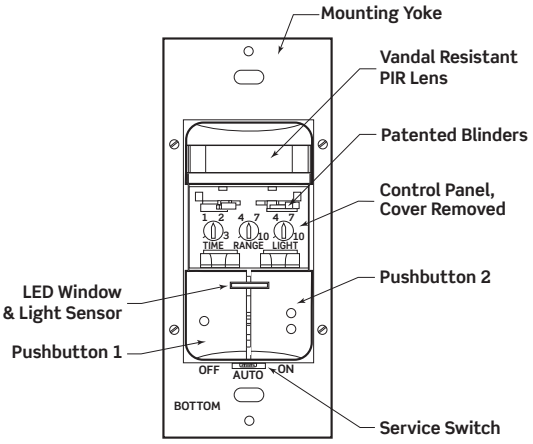

Leviton Manufacturing Co., Inc. Global Headquarters
201 North Service Road, Melville, NY 11747-3138 **tel** 800-323-8920 **fax** 800-832-9538 **tech line** (8:30AM-7:00PM ET Mon-Fri) 800-824-3005

Leviton Manufacturing Co., Inc. Lighting & Controls
10385 SW Avery St., Tualatin, OR 97062 **tel** 800-736-6682 **fax** 503-404-5594 **tech line** (6:00AM-4:00PM PT Mon-Fri) 800-959-6004

Visit our Website at: www.leviton.com/sensors

©2023 Leviton Manufacturing Co., Inc. All rights reserved. Subject to change without notice.

G-8318D/K23-am
REV NOV 2023