legrand®

PASS & SEYMOUR®
While In Use Covers

WIUC10FRED, WIUC20FRED

Extra Duty Rated Covers.

Extra heavy-duty covers withstand the toughest of conditions and ensure protection to devices. Corner hinges allow versatile polycarbonate covers to be installed either vertically or horizontally. They provide generous interior room to accommodate bends in even the heaviest cords. They are lockable to prevent tampering, and deliver excellent weather resistance thanks to neoprene-blend gasketing, a cord flap seal and our exclusive WaterShed™ channel.

FEATURES & BENEFITS

Trigger latch opens easily with one finger, yet lockable to prevent tampering

Pre-assembled with gasket for easier installation, saving time and preventing incorrect gasket placement

Frosted polycarbonate construction resists impacts and harsh weather while hiding dirt

Corner hinge and cord opening allows for vertical or horizontal installation (single gang only)

WIUC10FRED

Roomy interior provides space for plugs and cord bends

Snap-in device plates require no tools to install and won't fall out of cover, cutting installation time

NOTE **This product complies with the 2014 NEC(R) section 406.9(B)(1) which requires that an outlet box load installed for this purpose shall be listed and shall be identified as "extra-duty."**

FIELD USES/VERTICAL MARKETS

- Residential Homes
- Commercial Offices
- Retail
- Multiple Dwelling Units
- Health Care
- Education
- Hospitality

PASS & SEYMOUR®
While In Use Covers

ORDERING INFORMATION

Catalog Number	UPC	Gang	Mounting	Color	3RD PARTY COMPLIANCE cULus	Extra Duty
While In Use Covers						
WIUC10FRED	78500704123	Single	Vertical/Horizontal	Frosted Top/Gray Bottom	•	•
WIUC20FRED	78500704124	Two	Vertical	Frosted Top/Gray Bottom	•	•

***Snap-in adapter plates included for GFCI, duplex, and single receptacles**

Insert Plates

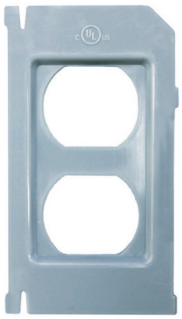

Duplex

GFCI

Round

TECHNICAL SPECIFICATIONS

3rd Party Compliance

cULus Listed, File Number E332841.
Covers conform to NEMA 3R.
Complies with 2014 NEC(R) Section 406.9(B)(1), 590.4(D)(2).

Performance

Environmental

Weatherproof for Wet Locations

Materials

Body	Polycarbonate	Screws	Tri-Drive Zinc
Cover	Polycarbonate	Gasket	Polyethylene Foam
Cover Finish	Frosted	Insert Plate	Polycarbonate

Warranty

1 Year

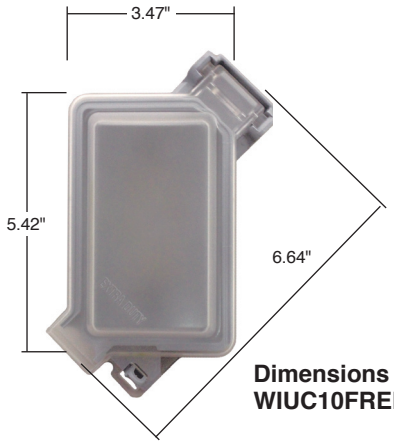

Dimensions for WIUC10FRED

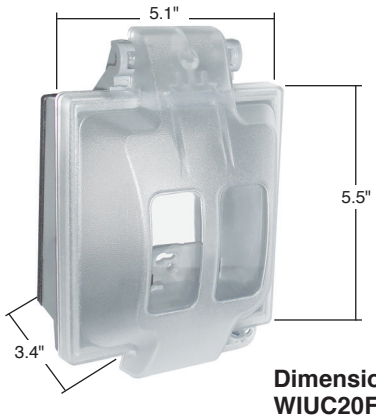

Dimensions for WIUC20FRED

For more information on these and other P&S products refer to our Catalog or visit our web site.

ALSO AVAILABLE...

- Hospital Grade Devices
- SPD & Isolated Ground Devices
- Ground Continuity Monitoring (GCM)
- Straight Blade Plugs & Connectors
- Turnlok® Locking Devices
- Weatherproof Boxes & Covers
- IEC 309 Industrial Products
- Flexcor® Wire Mesh Grips

Electrical Wiring Systems
P.O. Box 4822
Syracuse, NY 13221-4822
Phone: 1.800.776.4035
www.legrand.us/passandseymour

570 Applewood Crescent
Vaughan, Ontario L4K 4B4
Phone:905.738.9195
www.legrand.ca

SF20176 – January 2015 – For latest specs visit www.legrand.us/passandseymour
© Copyright 2015 All Rights Reserved Legrand EWS/CGXTP