INSTALLATION INSTRUCTIONS

Outdoor Load Center Enclosure

IMPORTANT SAFETY INSTRUCTIONS - READ ALL INSTRUCTIONS BEFORE USING.

PK-A3230-10-00-0B

⚠ WARNINGS

- **TO AVOID FIRE, SHOCK, OR DEATH, TURN OFF POWER SUPPLYING THIS EQUIPMENT AND CONFIRM POWER IS OFF,** before installing, removing, or servicing this equipment.
- This equipment **MUST BE** installed and serviced by an electrician.
- To be installed and/or used in accordance with electrical codes and regulations.
- Use **ONLY** approved fittings and clamps to avoid damage to wires.
- Leviton® circuit breakers **MUST BE** used with a Leviton circuit breaker enclosure.
- Before providing power to the load center, check all electrical connections and confirm that the wiring is correct.
- Replace all doors and covers before connecting power to this equipment.
- **SAVE THESE INSTRUCTIONS.**

LIMITED PRODUCT WARRANTY

For Leviton's limited product warranty, go to *www.leviton.com*. For a printed copy of the warranty you may call *1-800-323-8920*.

Patents covering this product, if any, can be found on Leviton.com/patents.

INSTALLATION

WARNING: TO AVOID FIRE, SHOCK, OR DEATH, TURN OFF POWER SUPPLYING THIS EQUIPMENT AND CONFIRM POWER IS OFF, before installing, removing, or servicing this equipment.

Step 1: Remove Load Center Door *(Optional)*

NOTE: The load center door can be removed for easier installation.

a. Lift **door (A)** upward to remove from **hinge (B)** *(fig. 1)*.
b. When installation is complete, align the door hinge with the hinge pin and insert downward until door is seated.

Step 2: Bottom feed applications *(Optional)*

NOTE: The Leviton® Load Center interior should be inverted for bottom feed applications.
NOTE: Install the closing plate (included) to the overhead opening of the enclosure for bottom feed applications.
NOTE: Before removing any knockouts from the enclosure, consult the local electrical code to determine the knockout requirements.

a. Remove the **mounting screws (C)** and the **green ground bonding screw (D)**.
b. Invert the **interior (E)** and place into **slots (F)**.
c. Replace the **mounting screws (C)** and **green ground bonding screw (D)** to secure the interior *(fig. 2)*. Torque all mounting screws to 20 +/- 2 in-lbs.
d. To remove **knockouts (G)**, first strike the center of the knockout.
e. Pry each **ring (H)** up, one at a time, and grip both ends with a pair of pliers.
f. Use the pliers to bend the **rings (H)**, until they disconnect from the enclosure *(fig. 3)*.

Step 3: Enclosure Mounting

Surface or Semi-Flush Mounting

a. Remove **deadfront (W)** by loosening the **securing screw (X)** and lifting the **deadfront (W)** off the enclsoure *(fig. 12)*.
b. Remove **mounting knockouts (I)** from the back of the enclosure *(fig. 4)*.
c. Use outdoor approved screws or nails (not provided) in the **mounting knockouts (I)** to secure the enclosure to the wall.

Step 4: Phase, Neutral, and Ground Conductors

WARNING: Use **ONLY** approved fittings and clamps to avoid damage to wires.

a. Bring the **phase (J)**, **neutral (K)**, and **ground (L)** conductors into the enclosure through the overhead conduit opening or a bottom-feed knockout.
b. Determine whether or not the application requires the use of a **main circuit breaker (M)** *(fig. 5)*, or if **main lugs (N)** *(fig. 6)* can be used, based on the local electrical codes.
c. Connect the **phase (J)**, **neutral (K)**, and **ground (L)** conductors to appropriate terminals and torque to spec in the Terminations table *(fig. 5 or 6)*.
d. If installing with a **main circuit breaker (M)**, also install the two (x2) **terminal covers (O)** that have been provided *(fig. 7)*.
e. When installing this enclosure as the service entrance, the **bonding strap (P) MUST BE** installed *(fig. 8)*. Torque to 20 in-lbs.
f. When installing this enclosure as a sub panel, **DO NOT** install the **bonding strap (P)**.
NOTE: For Service Equipment, apply "SERVICE DISCONNECT" label (provided) to trim, near main breaker handle.
NOTE: For Branch Equipment, apply "MAIN" label (provided) to trim, near main breaker handle.

Fig. 1

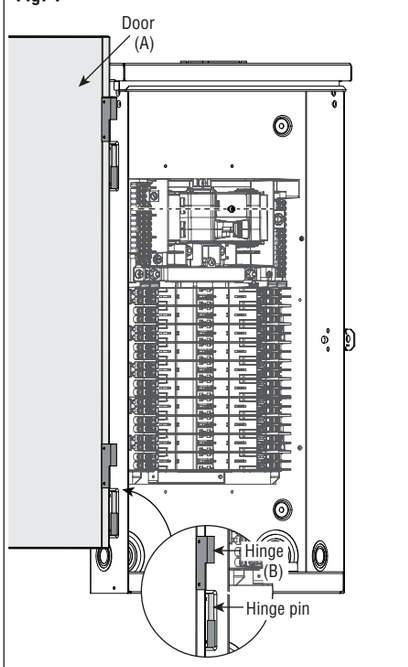

Fig. 2

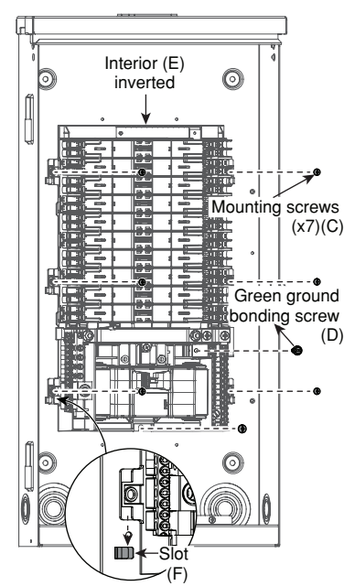

Fig. 3

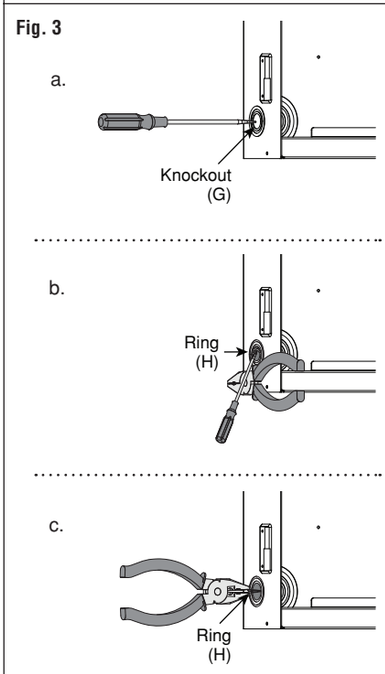

Fig. 4

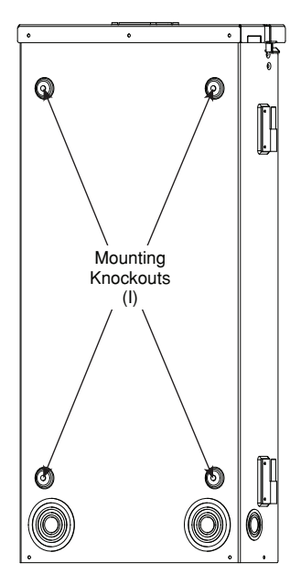

WEB VERSION

Step 5: Branch Circuit Breakers

WARNING: Leviton circuit breakers **MUST BE** used with a Leviton circuit breaker enclosure.

a. Strip and connect the **load phase (Q)** and **load neutral (R)** wires to the **load terminals (S)**, and ground wire to the **ground bus (T)** of the circuit breaker enclosure *(fig. 9)*. Strip wires and torque load terminals to spec in the Terminations table.

NOTE: Ensure that the main breaker is in the OFF position before installing any branch circuit breakers.

NOTE: Ensure that all branch circuit breakers are in the OFF position before installing into the panel.

b. Align the **hooks and guides (U)** of the branch circuit breaker with the panel and press until breaker snaps into place *(fig. 10)*.

Step 6: Installing Deadfront

NOTE: Twist-outs (V) must be removed for each position that contains a branch circuit breaker. Fill any unused open spaces in cover using filler plates.

a. To remove **twist-outs (V)**, first strike with a screwdriver, and then twist with pliers until detached *(fig. 11)*.

b. Install **deadfront (W)** by sliding it inward above the side wall protrusions on each side at a 45-degree angle, until bottom portion of the **deadfront (W)** is seated into enclosure *(fig. 12)*.

c. Secure the bottom of the **deadfront (W)** with the **securing screw (X)**.

d. Apply circuit directory labels on the back of the door.

Step 7: Complete the Installation

WARNING: Before providing power to the load center, check all electrical connections and confirm that the wiring is correct.

WARNING: Replace all doors and covers before connecting power to this equipment.

a. Ensure that the main and all branch circuit breakers are in the OFF position. To energize, first turn ON the main breaker, and then turn ON each individual branch circuit breaker.

TERMINATIONS

Termination Point	Wire Material	Wire Gauge	Strip Length	Torque
Main Breaker	Copper / Aluminum	#3 AWG - 300 MCM	1.0 in.	250 in.-lbs.
Main Lug	Copper / Aluminum	#6 AWG - 300 MCM	1.0 in.	375 in.-lbs.
Neutral Line	Copper / Aluminum	#6 AWG - 300 MCM	1.5 in.	375 in.-lbs
Ground	Copper / Aluminum	#4 AWG - 2/0 AWG	0.75 in.	50 in.-lbs
Load Phase (brass) & Load Neutral (silver)	Copper	(1) #4 AWG - #8 AWG, Stranded	0.4 in.	45 in.-lbs
		(1) #10 AWG, Solid or Stranded		35 in.-lbs
		(2) #14 AWG - #10 AWG, Solid		35 in.-lbs
		(1) #12 AWG - #14 AWG, Solid or Stranded		25 in.-lbs.
		(2) #14 AWG or (2) #12 AWG, Stranded		25 in.-lbs.
	Aluminum	(1) #4 AWG - #6 AWG, Stranded		45 in.-lbs
		(1) #8 AWG, Stranded		35 in.-lbs
		(2) #12 AWG - #10 AWG, Solid		35 in.-lbs
		(1) #10 AWG - #12 AWG, Solid		25 in.-lbs.
		(2) #12 AWG or (2) #10 AWG, Solid		25 in.-lbs.
Neutral & Equipment Ground Bar	Copper/ Aluminum	(1) #6 AWG - #4 AWG, Stranded	0.5 in.	35 in.-lbs
		(1) #8 AWG, Stranded		25 in.-lbs
		(1) #14 AWG - #10 AWG Solid or Stranded		20 in.-lbs
	Copper	(2) #14 AWG - #10 AWG, Solid or Stranded		25 in.-lbs
		(1) #14 AWG and (1) #12 AWG, Solid		25 in.-lbs
		(1) #14 AWG and (1) #10 AWG, Solid or Stranded		25 in.-lbs
		(1) #12 AWG and (1) #10 AWG, Solid		25 in.-lbs
	Aluminum	(2) #12 AWG - #10 AWG, Solid		20 in.-lbs
		(1) #12 AWG and (1) #10 AWG, Solid		20 in.-lbs
Neutral Bar	Copper/ Aluminum	#4 AWG - #1 AWG, Stranded	0.5 in	50 in.-lbs
		#8 AWG - #6 AWG, Stranded		30 in.-lbs
	Copper	#14 AWG - #10 AWG, Solid or Stranded		30 in.-lbs
	Aluminum	#12 AWG - #10 AWG, Solid		30 in.-lbs

Fig. 5

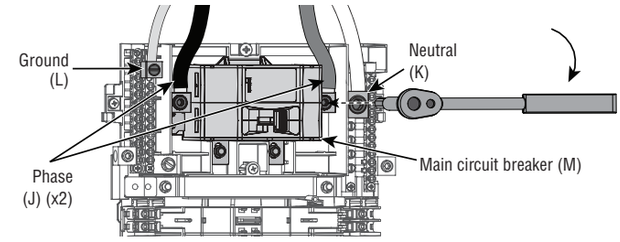

Fig. 6

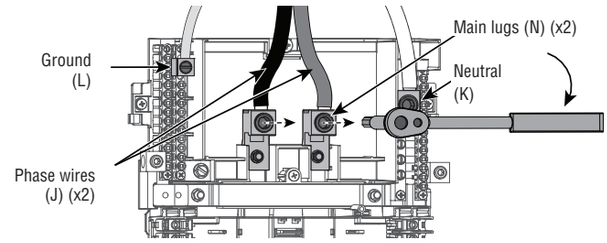

Fig. 7

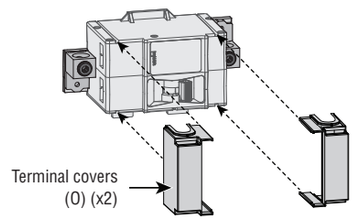

Fig.8

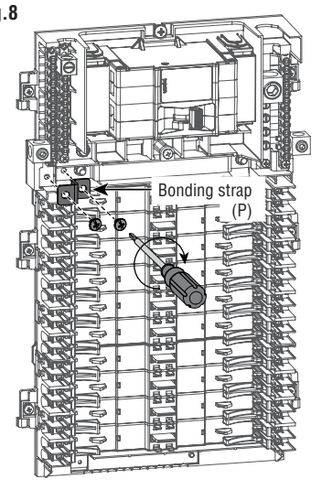

Fig. 9

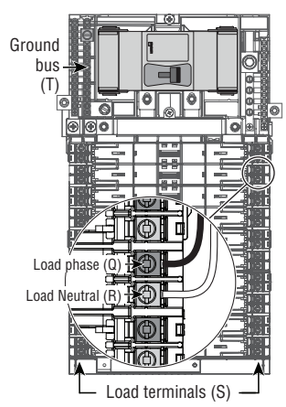

Fig. 10

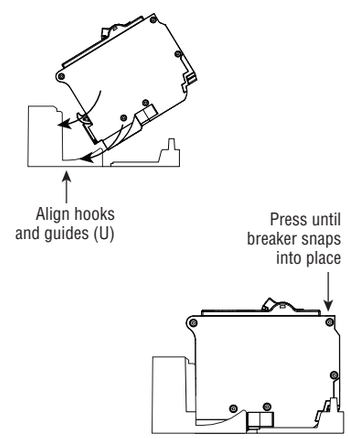

Fig. 11

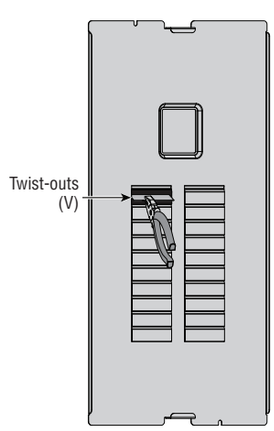

Fig. 12

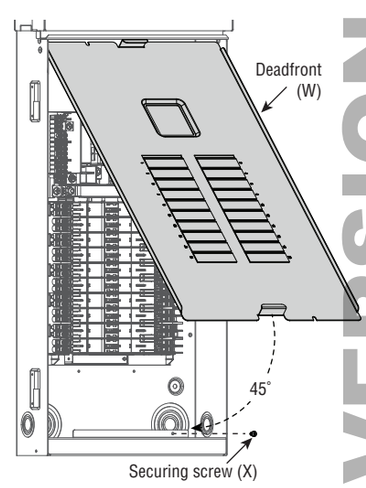

WEB VERSION

© 2022 Leviton Mfg. Co., Inc.