chargepoint | evr-green®

LEVITON®

evr-green 4000
Networked Charging Station

Cat. No. CPHU1, CPHU2, CPCMK, CPMEX,
CPCAP-B, CPCAP-W, CPCBX, CPMBX

Installation and Operation Manual

PK-A3327-10-00-0A

chargepoint | evr-green®

LEVITON®

PRODUCT APPLICATION LIMITATION

IMPORTANT SAFETY INSTRUCTIONS: SAVE THESE INSTRUCTIONS

WARNINGS

1. **Read and follow all warnings and instructions before installing and operating the Leviton ChargePoint® Charging Station.** Failure to do so may lead to death, injury, or property damage, and will void the Limited Warranty.
2. **Must be installed by qualified personnel, preferably an electrician,** to ensure compliance with local building and electrical codes and standards, climate conditions, safety standards, and all applicable codes and ordinances. Inspect the Charging Station for proper installation before use.
3. **TO AVOID FIRE, SHOCK OR DEATH, disconnect power before installing or servicing the product and always ground the Leviton ChargePoint® Charging Station.** The Charging Station must be connected to a grounded, metal, permanent wiring system, or an equipment grounding conductor shall be run with circuit conductors and connected to the equipment grounding terminal or lead on the Electric Vehicle Supply Equipment (EVSE). Connections to the EVSE shall comply with all applicable codes and ordinances.
4. **Install the Leviton ChargePoint® Charging Station on a concrete pad using a Leviton ChargePoint approved method.** Failure to install on a surface that can support the full weight of the Charging Station can result in death, personal injury, or property damage. Inspect the Charging Station for proper installation before use.
5. **This Charging Station is not suitable for use in hazardous locations.**
6. **This device should be supervised when used around children.**
7. **Do not put fingers into the electric vehicle connector.**
8. **Do not use this product if the flexible power cord or EV cable is frayed, has broken insulation, or any other signs of damage.**
9. **Do not use this product if the enclosure or the EV connector is broken, cracked, open, or shows any other indication of damage.**
10. **Use 75°C or 90°C rated wire copper conductors only.**

Important

Under no circumstances will compliance with the information in this manual relieve the user of his/her responsibility to comply with all applicable codes or safety standards.
This document describes the most commonly-used installation and mounting scenarios.
If situations arise in which it is not possible to perform an installation following the procedures provided in this document, contact ChargePoint, Inc. **Leviton Mfg. Co., and our partner ChargePoint, Inc. are not responsible for any damages that may result from custom installations that are not described in this document or for any failure to adhere to installation recommendations.**

chargepoint | evr-green®

LEVITON®

PRODUCT USAGE INFORMATION

Product Disposal

Do not dispose of as part of unsorted domestic waste. Inquire with local authorities regarding proper disposal. Product materials are recyclable as marked.

No Accuracy Guarantee

Commercially reasonable efforts were made to ensure that the specifications and other information in this manual are accurate and complete at the time of its publication. However, the specifications and other information in this manual are subject to change at any time without prior notice.

Copyright and Trademarks

©2013-2021 ChargePoint, Inc. All rights reserved. This material is protected by the copyright laws of the United States and other countries. It may not be modified, reproduced or distributed without the prior, express written consent of ChargePoint, Inc. CHARGEPOINT is a U.S. and European Union registered trademark and service mark of ChargePoint, Inc. and cannot be used without the prior written consent of ChargePoint.

TABLE OF CONTENTS

1 Introduction **5**
Power Management 5
Site Requirements 5
2 Install a Pedestal Mount evr-green 4000 ..... **6**
Gather Required Tools 6
Inspect the Boxes for Correct Contents 6
Prepare the Pedestal for Mounting 8
Mount the Pedestal 9
Install the Housing 10
Prepare the CPCMK for Mounting 11
Install the CPCMK 12
3 Install a Wall Mount evr-Green 4000 ..... **13**
Gather Required Tools 13
Inspect the Boxes for Correct Contents 13
Drill Holes in the Wall 15
Mount Rear Brackets to the Wall 15
Prepare the CPCBK for Mounting 16
Mount the CPCBK 16
Install the Housing 17
Install the Conduit 18
4 Connect Wiring **19**
Review Electrical Input and Output 19
Review Wiring Diagrams 20
Wiring for Dual or Single Port Stations 22
Check Voltages 24
5 Install the Head Assembly and Top Cap **25**
Prepare the Head Assembly for Mounting 25
Connect the Head Assembly 26
6 Complete Station Setup **27**
Power Up 27
Install Cable Clamps 27
Run the Installation Wizard 28
Secure the Head Assembly 28
Pinpoint the Station 29
Start a Charging Session 30
Activating a Leviton Charger 30
7 Warranty and Contact Information **31**

1 INTRODUCTION

Leviton provides the all-purpose evr-Green 4000 Level 2 charging station for property owners, businesses, and municipalities. The evr-Green 4000 can be mounted on a pedestal or a wall.

Important: The evr-Green 4000 must be installed and serviced by ChargePoint approved installers only. To complete online training and become an approved installer, refer to ChargePoint University at: ChargePoint.com/installers. ChargePoint approved installers can download the *Site Design Guide, Installation Guide*, *Data Sheet*, and installation templates for this charging station at: ChargePoint.com/support/guides. Follow the instructions in the Installation Guide and heed all warnings.

If the Evr-Green 4000 is installed by any person other than a ChargePoint approved installer, the Evr-Green 4000 is not covered under warranty and ChargePoint is not responsible for any malfunctions. Read the entire Installation Guide prior to beginning installation.

Power Management

Using ChargePoint Power Management technology, sites can install more stations than otherwise would be supported by the available electrical service. A maximum aggregate load is defined for a group of charging stations, and ChargePoint cloud-based services manage the individual power output of each station (or port) to ensure the maximum load is never exceeded.

As shipped, a Evr-Green 4000 charging station provides up to 30 A of output current to each charging port.

An optional Power Management Kit is available that allows you to adjust the station's output power.

Additional information regarding Power Management for your Evr-Green 4000 stations is available at ChargePoint.com/support/guides.

Site Requirements

Ensure that the appropriate wiring, circuit protection, and metering is in place at the installation location by reviewing the *Site Design Guide* and *Evr-Green 4000 Data Shee*t, as well reviewing the wiring diagrams and grounding requirements in the Connect Wiring chapter.

Important: Always check local codes to ensure the installation complies with all applicable codes and ordinances.

2 INSTALL A PEDESTAL MOUNT EVR-GREEN 4000

Gather Required Tools

You need:

- Ratchet and 10 mm (3/8 in) deep socket
- 27 mm (1-1/16 in) socket wrench
- Adjustable wrench
- Level
- #2 Phillips screwdriver
- #3 Wire cutter
- Wire stripper
- Voltage tester

Inspect the Boxes for Correct Contents

The pedestal mount evr-green 4000 ships in four boxes.

Housing

The station's housing box contains:

- Housing with pedestal inside
- Rubber spacer (inside the housing)
- Plastic cap
- Phillips screws (4)

Cat No. CPMBX

2 INSTALL A PEDESTAL MOUNT EVR-GREEN 4000

Cat. No. CPCBX

The station's CPCBX box contains:

- Cable Management Kit (CPCBX)
- Pre-installed EV Charging Only sign
- Cable clamps (2)

Note: The cable clamps are extra and will not be used during installation.

CPCBX comes with one or two 5.5 m (18 ft) charging cable(s)

Top Cap

The station's top cap box contains:

- Top cap
- Installation Guide

If installing both pedestal and wall-mount stations, also pay attention to the top cap's shape.

- The back of the top cap is rounded for pedestal stations (a)
- The back of the top cap is flat for wall mount stations (b)

a

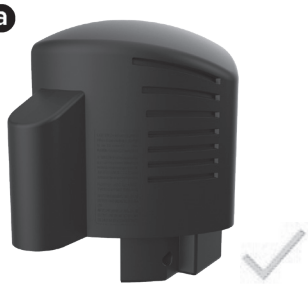

Cat No. CPCAP-B

b

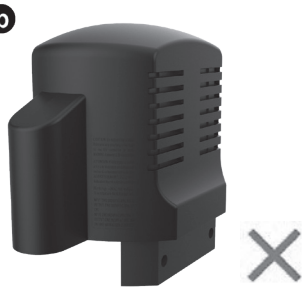

Cat No. CPCAP-W

Head Assembly

Cat No. CPHU1/CPHU2

The station's head assembly box contains:

- T25 security Torx L-wrench
- Rubber plugs (4)
- Spare activation label

Note: Keep the activation label for future reference. It contains critical information that is needed to activate the station on ChargePoint. You will also have 2 spare rubber plugs at the end of installation. Plan to return the spare activation label and rubber plugs to the station owner.

Cat No. CPHU2

2 INSTALL A PEDESTAL MOUNT EVR-GREEN 4000

Prepare the Pedestal for Mounting
Cat. No. CPMBX

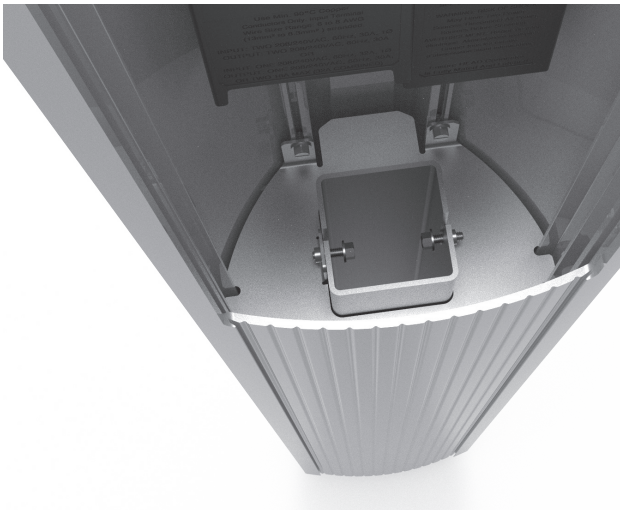

1. Using a 10 mm (3/8 in) socket wrench, loosen (but do not remove) the two screws holding the pedestal inside the housing.

2. Remove and discard the cardboard shipping spacer.

3. Remove the pedestal from the housing by pulling it out from the bottom of the housing. Keep the rubber spacer in place over the pedestal.

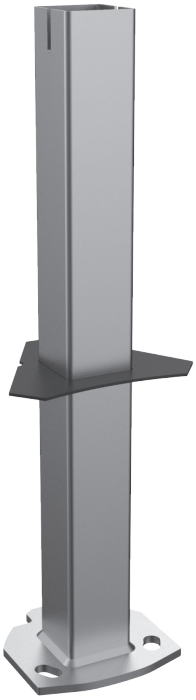

2 INSTALL A PEDESTAL MOUNT EVR-GREEN 4000

Mount the Pedestal

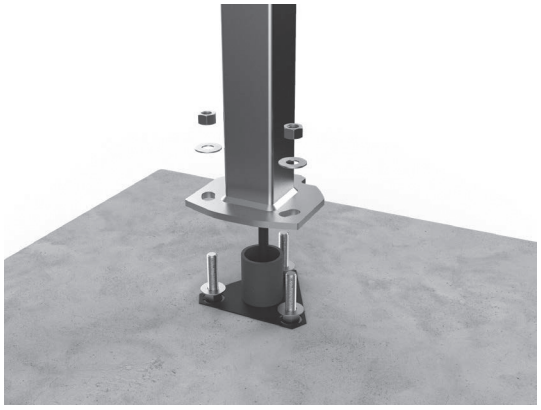

1. Pull wires through the conduit.

2. Place the pedestal over the conduit, ensuring the curved front edge of the pedestal base is located where you want the front of the charging station.

   Note: If the conduit is not coming up through the center of the pedestal, install the conduit in the side of the housing after mounting the pedestal.

3. Adjust the lower nuts as necessary to ensure the pedestal is level.

4. Tighten the nuts on top of the pedestal to at least 160 Nm (118 ft-lbs) using a 27 mm (1-1/16 in) socket wrench.

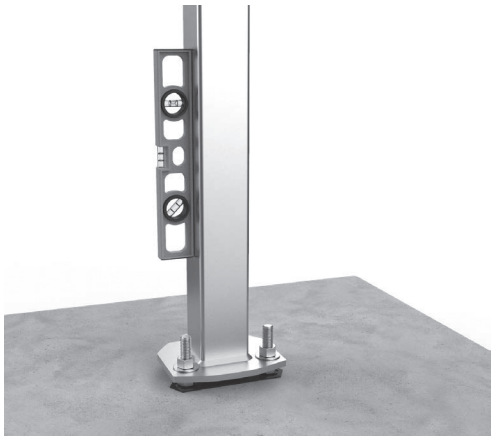

Important: Ensure the pedestal is plumb by adjusting the nuts underneath the pedestal base. Verify accuracy after each adjustment by positioning the level at various locations on the pedestal, above each bolt.

Alternative Installation: Side Mounted Conduit

In situations where the conduit cannot come up from below the pedestal (existing concrete, parking garage, etc.), continue here after mounting the pedestal, ensuring that it is level and tight.

You will need a hole saw or a knockout punch.

1. Determine a conduit entry point on either side of the housing 715-785 mm (28-31 in) from the bottom, in a location that does not intersect any internal ribs.

2. Drill or punch a hole for a 21 mm (3/4 in) or 27 mm (1 in) trade size knockout.

3. Pull wire through the conduit, protecting the wires from sharp edges of the internal structural components.

4. Seal the conduit entry into the bollard housing using an approved sealing gasket.

Important: Ensure that you follow all applicable building and electrical codes. All installations must meet local code.

Install the Housing

Important: Do not seal the pedestal to the concrete pad with caulking, silicone, or other sealing material. Doing so traps water inside the housing. The pedestal is designed to shed moisture between its bottom surface and the concrete pad.

1. Align the notches on the rubber spacer with the front mounting nuts.
2. Slide the rubber spacer all the way down the pedestal until it is flush with the pedestal base. This prevents any rocking motion between the housing and the pedestal.

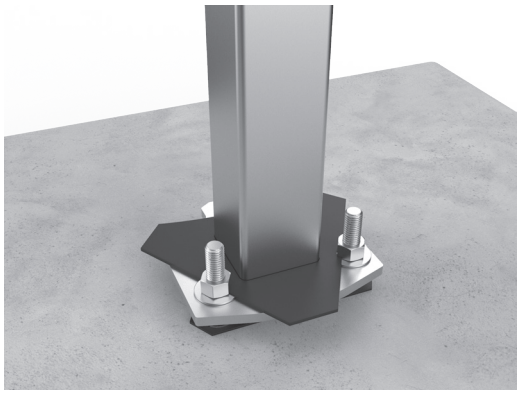

3. Slide the housing over the pedestal.

Note: Ensure the housing is firmly aligned to the bottom surface and that no rocking movement can take place, even when significant pressure is applied.

4. Re-tighten the mounting screws loosened when preparing the pedestal for mounting to approximately 9 Nm (6.6 ft-lbs) using a 10 mm (3/8 in) socket wrench.

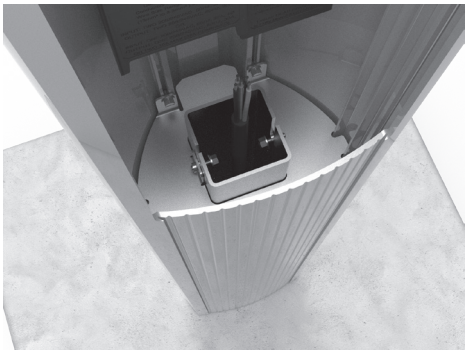

2 INSTALL A PEDESTAL MOUNT EVR-GREEN 4000

When complete, the housing appears as shown.

Prepare the CPCBX for Mounting

1. Position the Cable Management Kit (CPCBX) packaging so that the bottom of the CPCBX is near the base of the pedestal.

Note: Do not unwrap the ropes.

2. Remove and discard the two shipping screws.

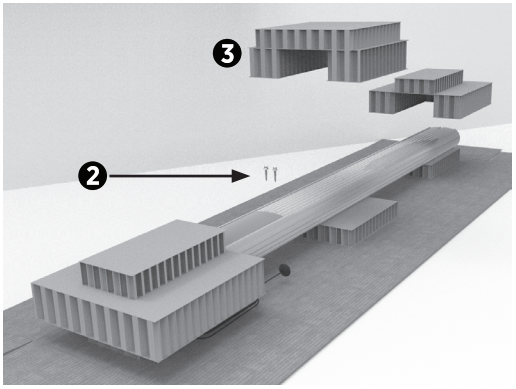

Caution: When you remove the shipping screws, the counterweights are free to move in either direction. Therefore, always carry the assembly with the top end higher than the bottom end.

3. Remove the cardboard packaging.

Caution: If you are replacing the EV PARKING signage with your own custom signage, it is easier to do it now. Refer to the replacement guide for signs available at ChargePoint.com/support/guides.

Install the CPCBX

1. Insert the black cap into the space at the top of the housing, between the housing and the CPCBX.

2. With a #3 Phillips screwdriver and at least one of the four screws (provided) in hand, slowly lift the CPCBX into position against the back of the housing.

Caution: The ropes will rise as the weights inside the CPCBX lower. Guide the ropes to the top as you slowly lift the CPCBX.

3. Place the slot at the bottom of the CPCBX over the knob at the bottom of the housing, pushing down until flush with the ground.

4. From inside the housing, insert the four screws through the housing and the CPCBX.

5. Tighten the four screws to 7 Nm (5 ft-lbs).

Note: Hold the CPCBX in place until you've secured it with at least one screw.

When complete, proceed to Chapter 4 to connect wiring to the station.

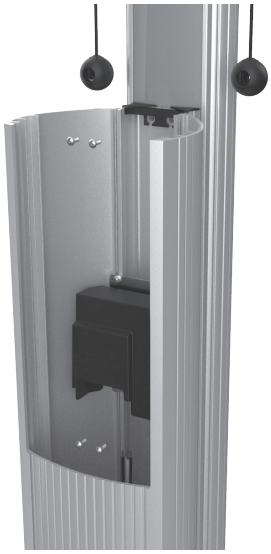

3 INSTALL A WALL MOUNT EVR-GREEN 4000

Gather Required Tools

You need:

- Ratchet and 15 mm (9/16 in) deep socket
- #2 and #3 Phillips screwdrivers
- Flathead screwdriver
- Tape measure
- Level
- Marker
- Wire stripper
- Wire cutter
- Voltage tester
- Drill and tap for appropriate wall attachment hardware
- Attachment hardware

Note: This varies based on surface. For example, use 10 x 75 mm (3/8 x 3 in) lag bolts if mounting on a wooden wall.

WARNING: Ensure the wall supports the station. If mounting to a hollow wall, bridge at least two studs using a 41 mm (1-5/8 in) channel strut.

Inspect the Boxes for Correct Contents

The wall mount evr-green 4000 ships in four boxes.

Housing

The housing box contains:

- Housing
- 2 slot covers
- Mounting brackets with pre-installed:
  - (20) 6 mm (1/4 in) screws
  - (2 sets) 9.5 mm (3/8 in) x 406 mm (16 in) x 19 mm (3/4 in) flange bolts

Caution: Do not discard the bracket packing box until you have completed drilling holes in the wall. The packing box serves as a template for drilling mounting holes.

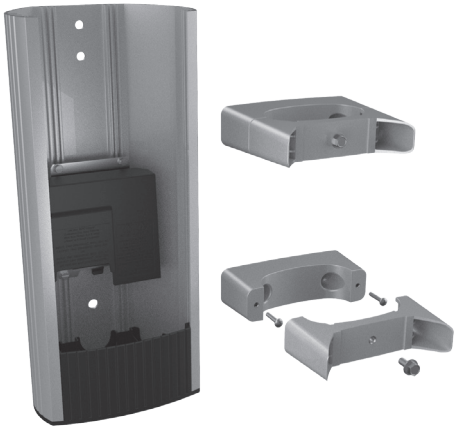

Cat No. CPMEX

3 INSTALL A WALL MOUNT EVR-GREEN 4000

CPCBX

The CPCBX box contains:

- Cable Management Kit (CPCBX) pre-installed with EV Charging Only sign
- Cable clamps (2)

Top Cap

The station's top cap box contains:

- Top cap
- Installation Guide

If installing both pedestal and wall-mount stations, also pay attention to the top cap's shape.

- The back of the top cap is flat for wall mount stations (a)
- The back of the top cap is rounded for pedestal stations (b)

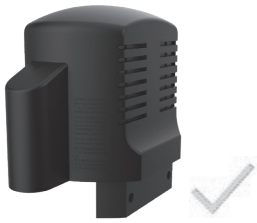

Cat No. CPCAP-W

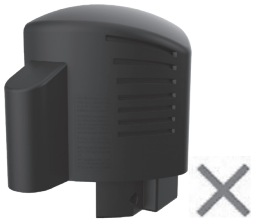

Cat No. CPCAP-B

Head Assembly

The station's head assembly box contains:

- T25 security Torx L-wrench
- Rubber plugs (4)
- Spare activation label

Note: Keep the activation label for future reference. It contains critical information that is needed to activate the station on ChargePoint. You will also have 2 spare rubber plugs at the end of installation. Plan to return the activation label and plugs to the station owner.

Cat No. CPHU2

3 INSTALL A WALL MOUNT EVR-GREEN 4000

Drill Holes in the Wall

1. Tear the packing box along the perforation to allow it to lay flat.
2. Place the template against the wall. As described on the package insert, align the top where indicated, 1245 mm (49 in) above the floor or ground.
3. Ensure the template is level and the side of the packaging insert is plumb.
4. Mark the four mounting holes.
5. Drill four holes in the wall at the marked locations.

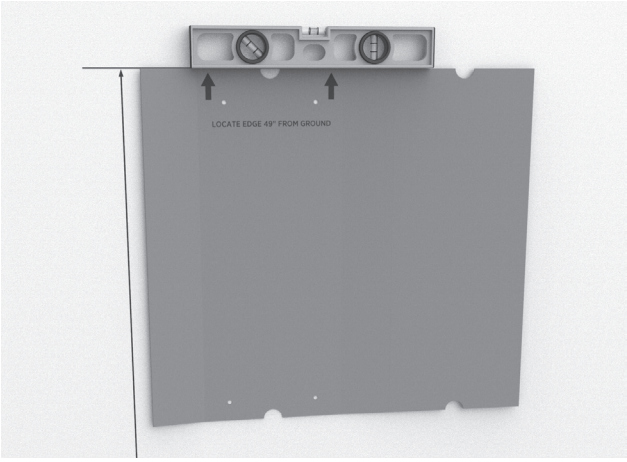

Mount Rear Brackets to the Wall

1. Separate the pre-assembled front and rear brackets by loosening (but not removing) the pre-installed screws. Leave about 19 mm (3/4 in) protruding.
2. Mount each rear bracket to the wall using screws appropriate for the type of wall material.
   - If mounting to a hollow wall, bridge at least two studs using a 41 mm (1-5/8 in) channel strut.
   - For wood studs, use 10 mm (3/8 in) lag bolts that are long enough to penetrate at least 64 mm (2-1/2 in) into the stud. Then mount the supplied brackets to the channel strut using 3/8-16 x 1 in long bolts, 3/8 ID x 13/16 in OD washers, and 3/8-16 channel strut nuts.
   - If mounting to a masonry wall, use 10 mm (3/8 in) expanding masonry fasteners.
   - If mounting to a wood wall, use 3/8 x 3 in lag bolts.

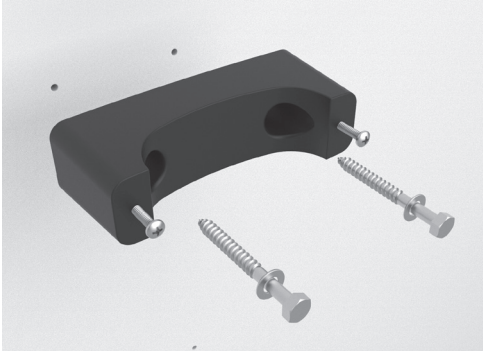

3 INSTALL A WALL MOUNT EVR-GREEN 4000

Prepare the CPCBX for Mounting

1. Position the Cable Management Kit (CPCBX) packaging so that the bottom of the CPCBX is near the wall.

   Note: Do not unwrap the ropes.

2. Remove and discard the two shipping screws.

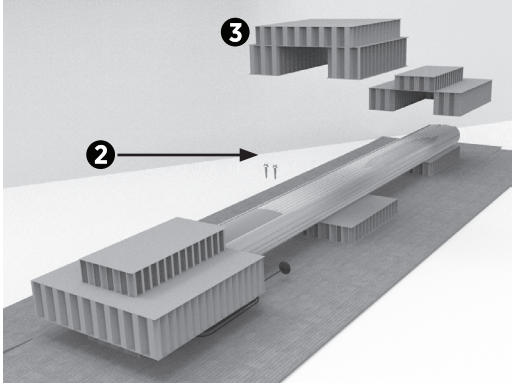

> **Caution:** When you remove the shipping screws, the counterweights are free to move in either direction. Therefore, always carry the assembly with the top end higher than the bottom end.

3. Remove the cardboard packaging.

   Note: If you are replacing the EV PARKING signs with your own custom signage, it is easier to do it now. Refer to the replacement guide for signs available at ChargePoint.com/support/guides.

Mount the CPCBX

1. Place the two front brackets where you can easily reach them.
2. Slowly lift the CPCBX up against the rear brackets, with the front of the CPCBX facing towards you. Rest the bottom of the CPCBX on the ground.
3. Place the top front bracket over the two corresponding screws protruding from the top rear bracket. Steady the CPCBX with one hand while using the other hand to position the bracket.
4. Repeat step 3 for the bottom bracket.
5. Tighten all four screws to 7 Nm (5 ft-lb) using the Phillips screwdriver.
6. Insert the slot cover, bottom first, into the slot at the bottom of the CPCBX.

Install the Housing

1. Push the tab on the terminal block cover to slide the cover up and expose the pre-drilled hole below the terminal block. Slide the cover upward until it stays in position.

2. Remove the pre-installed flange bolts from the front brackets using a 10 mm (3/8 in) socket.
3. Position the housing so that the top hole aligns with the top CPCBX bracket.
4. Re-insert a flange bolt into the top hole and finger tighten.

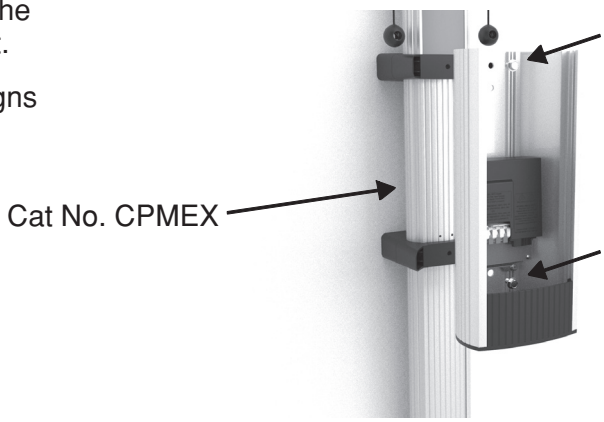

5. Re-insert the other flange bolt into the lower mounting hole.
6. Tighten both flange bolts to 117 Nm (86 ft-lbs).

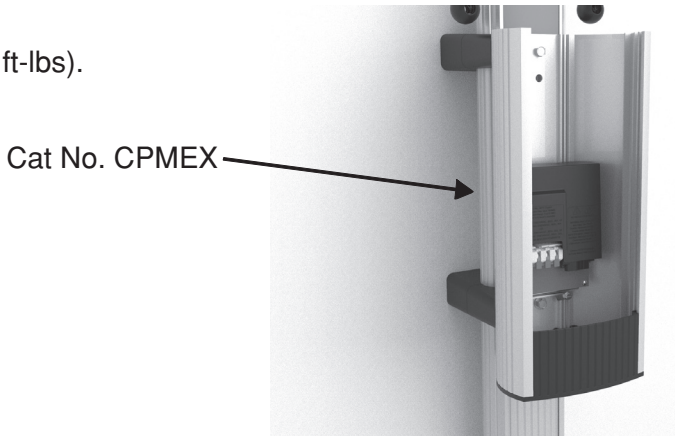

Install the Conduit

1. Use a flathead screwdriver to remove the knockout for the appropriate conduit size, 25 mm or 20 mm (1 in or 3/4 in).

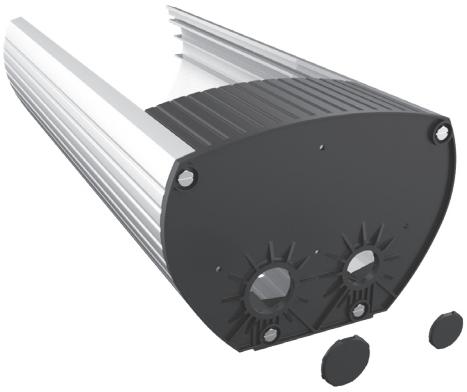

2. Install and seal the conduit following local codes.

When complete, proceed to Chapter 4 to connect the wiring to the station.

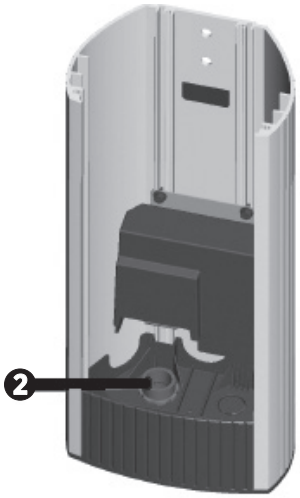

4 CONNECT WIRING

WARNING: TO AVOID FIRE, SHOCK OR DEATH, turn off power at circuit breaker or fuse and test that the power is off before wiring.

Use copper conductors only.

Do not provide GFCI protection at the panel. The evr-green 4000 has built-in GFCI protection.

Use breakers rated at 40 A (or lower, if you are configuring the station to operate at a lower current capacity).

In areas with frequent thunderstorms, add surge protection at the service panel for all circuits.

Use new circuit breakers only.

Ensure all power and ground connections (especially those at the breaker) are clean and tight. Remove all oxide from all conductors and terminals before connecting wiring.

Review Electrical Input and Output

Refer to the *evr-green 4000 Data Sheet* for electrical input and output specifications.

Review Wiring Diagrams

The wiring diagrams below show wiring for installing a dual port Evr-Green 4000 on a dual circuit. Two dedicated circuits are required, each with its own two-pole 40 A breaker, unless it is configured for operating at reduced power.

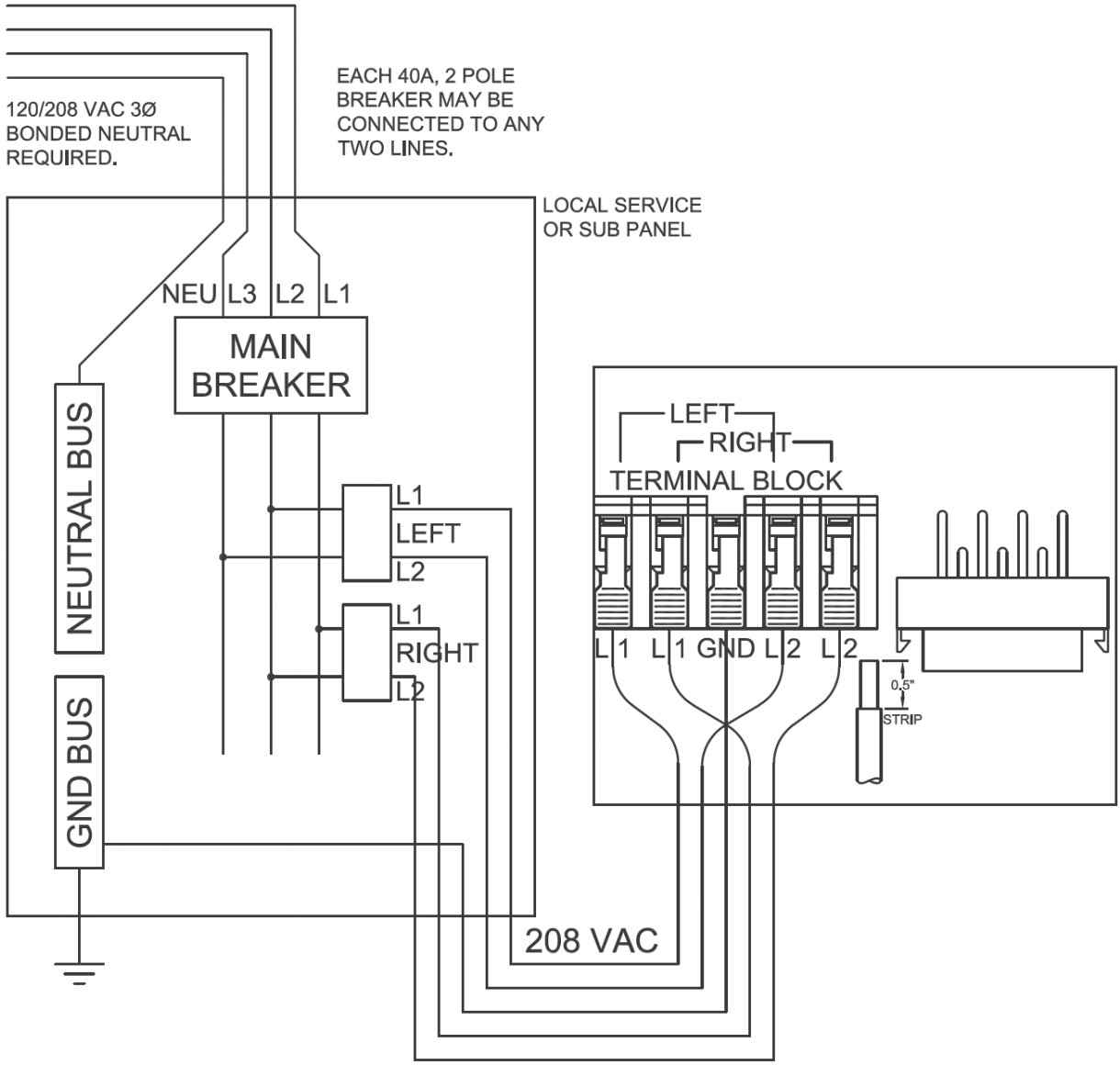

208 VAC, THREE PHASE PANEL

4 CONNECT WIRING

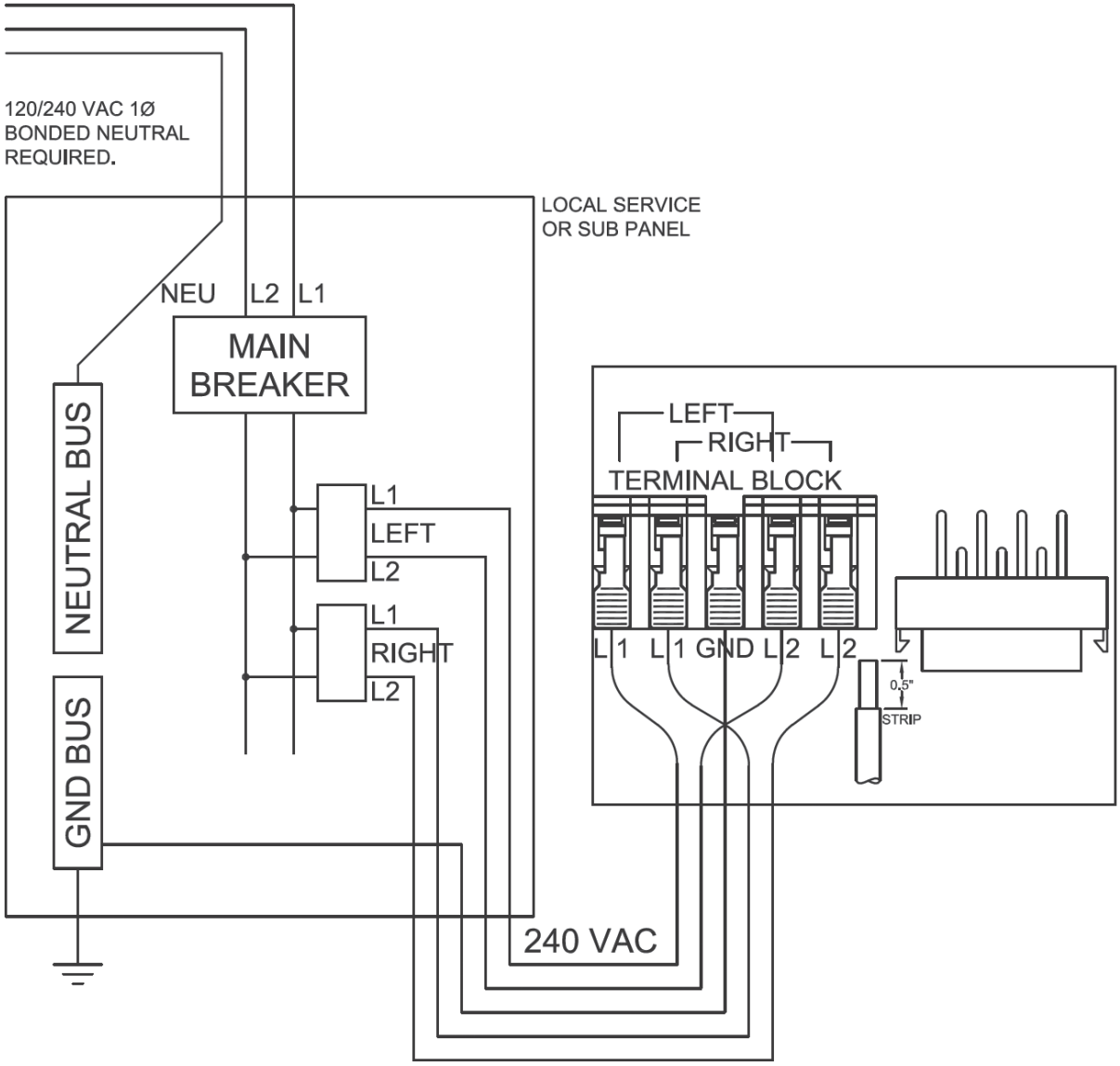

240 VAC, SINGLE PHASE PANEL

Wiring for Dual (CPHU2) or Single (CPHU1) Port Stations

1. Strip wires 13 mm (1/2 in).
2. Push the black tab on the terminal block to release the terminal block cover.
3. Slide the cover up until it locks into the raised position.
4. Lift all applicable levers on the terminal block.

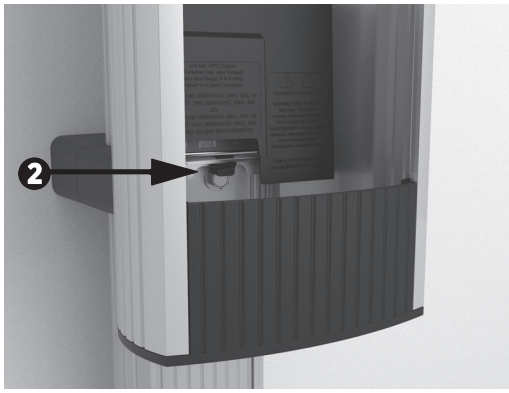

5. Insert the ground wire into the center connector (GND).
6. Push the center lever down until it clicks into its fully closed position.

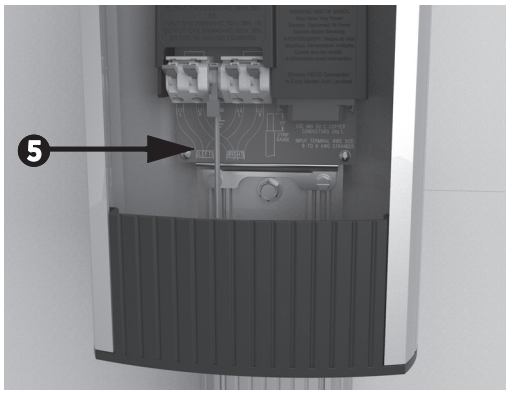

4 CONNECT WIRING

7. Insert the 240 VAC L1 and L2 wires.

8. Push the levers down until they click into their fully closed position.

Note: As shipped, a evr-green 4000 charging station provides up to 30A of output power to each charging port. The station's output power can be adjusted using the Power Management Kit.
Make sure to read and follow the instructions included in the Power Management Kit.

Dual Port Wiring
Cat. No. CPHU2

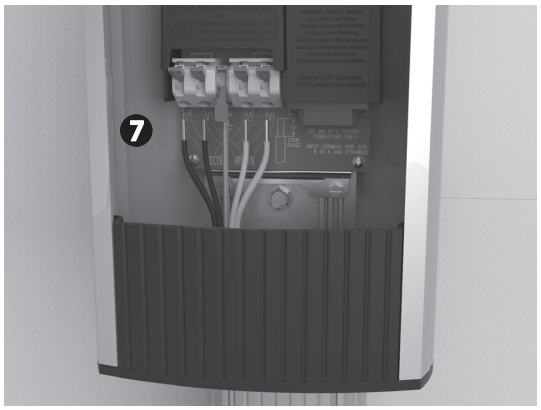

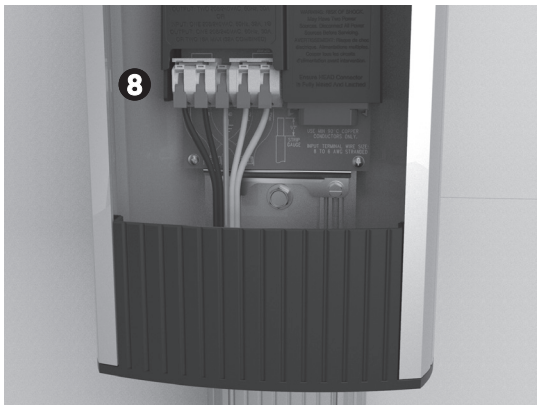

Single Port Wiring
Cat. No. CPHU1

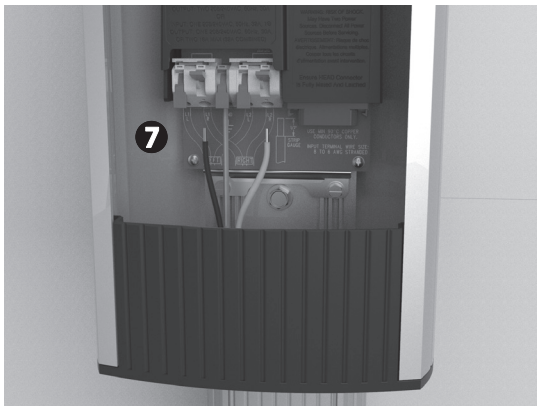

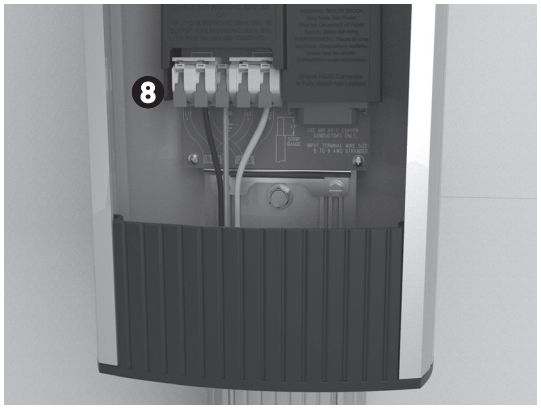

Check Voltages

The table lists the expected input voltage measurements:

Measure Between	Volts (Nominal)
L1R – L2R	208/240 VAC
L1L – L2L	208/240 VAC
L1R – GND	120 VAC
L2R – GND	120 VAC
L1L – GND	120 VAC
L2L – GND	120 VAC

1. Turn power ON.
2. Using a solenoid type voltage tester, check that the voltages at the charging station's terminal block are expected as listed in the table above.
3. Insert the meter probes into the holes under each lever and check the input voltage as listed in the table above.
   - If the voltages are not as expected, ensure that the wiring has been properly connected. Refer to the detailed wiring diagrams in this chapter.
   - For grounding requirements, see the *evr-green 4000 Data Sheet*.
4. Resolve any wiring issues and ensure that voltages are as expected.
5. Turn power OFF.

Proceed to the next chapter to install the head and top cap assembly.

5 INSTALL THE HEAD ASSEMBLY AND TOP CAP

Prepare the Head Assembly for Mounting

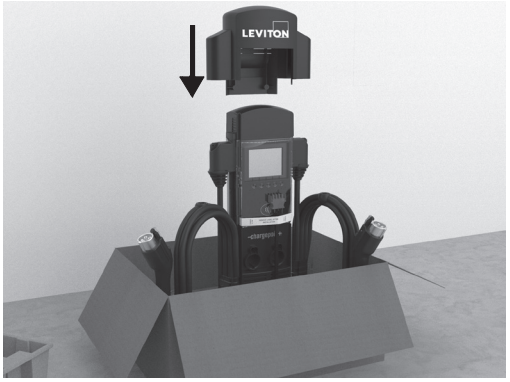

1. Open the box and stand the head upright on its foam packaging, as shown.
2. Place the top cap over the head assembly.

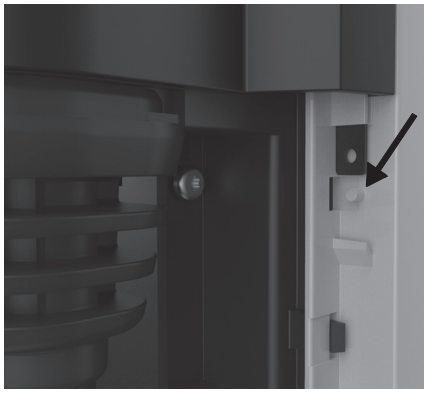

3. Slide the top cap down onto the head assembly.
4. Ensure the front tabs are aligned over the clear nodules on the lens.

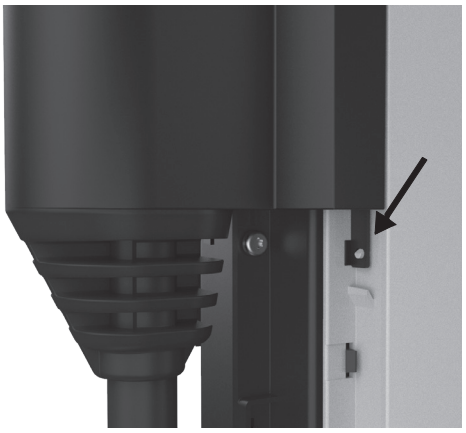

5. Push down until the front tabs and rear snaps are fully seated.
6. Check the lift-tabs located at the back of the top cap are pushed down to be flush with the body.

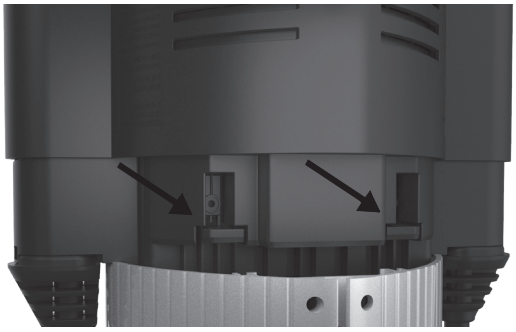

7. Verify that both snaps are fully engaged.

5 INSTALL THE HEAD ASSEMBLY AND TOP CAP

Connect the Head Assembly

CAUTION: Do not insert the charging connectors into the holsters until after you have powered up the station. Doing so causes the holsters to permanently lock.

1. Slide the head assembly into the housing until it is stopped by the L-wrench attached to the head.
2. Pull to remove the yellow strap from the blue connector.

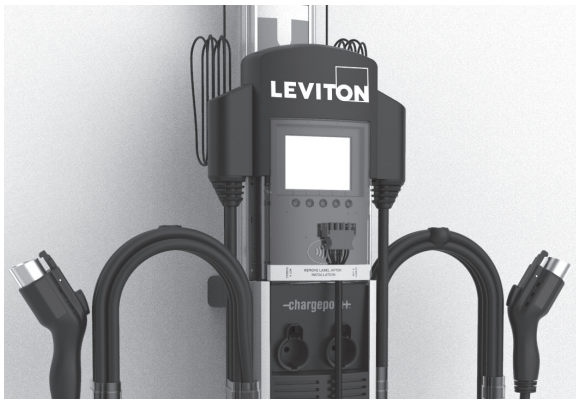

3. Connect the blue connector to the blue terminal block, ensuring it clicks into place and is fully seated.

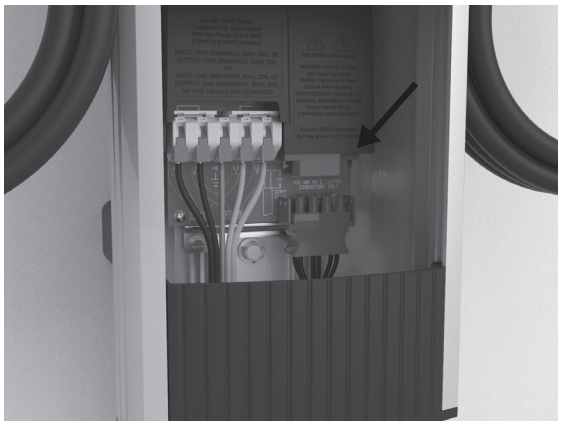

4. Push the cover down over the terminal block.

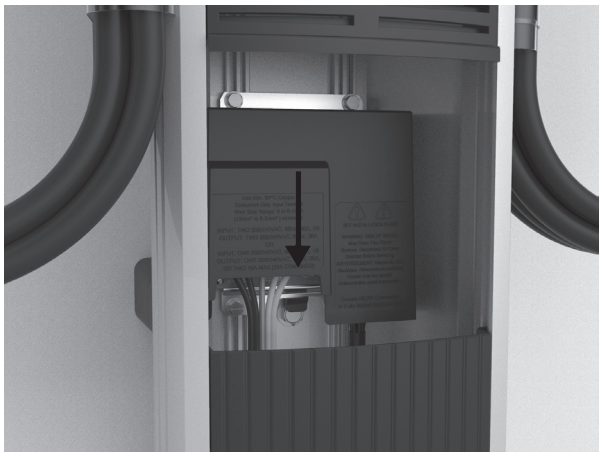

6 COMPLETE STATION SETUP

To complete the setup, you must have completed the ChargePoint installer training and received your ChargePoint installer login. To complete the next steps, you need:

- Installer login
- Activation label (including the MAC address)
- A smartphone with a camera, QR code scanning (usually built into the camera app), Internet connectivity, and the ChargePoint app

Power Up

Power up the station. If the station does not power up, turn power back off and check that the head assembly's blue rectangular connector is fully seated into the terminal block.

Install Knot Bearing

Note: Installing the knot bearing requires no tools. You do not need anything from the extra cable clamp kit that comes with the CPCBX.

1. Uncoil the charging cable by gently extending it all the way out and away from the station. Rotate the plug as needed to remove any twist or kinks.
2. Position the charging cable near the base of the station.
3. Align the knot bearing on each rope to its corresponding mating feature on the cable clamp.
4. Turn the knot bearing clockwise approximately 1/4 turn. You may need to push down while turning the knot bearing.
5. Unwrap the rope and check that the charging cable extends and retracts fully and smoothly.

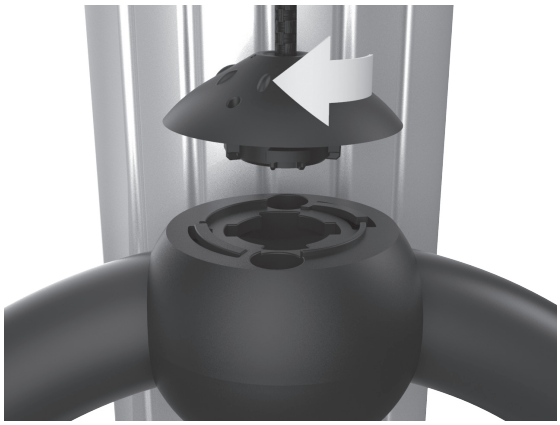

Run the Installation Wizard

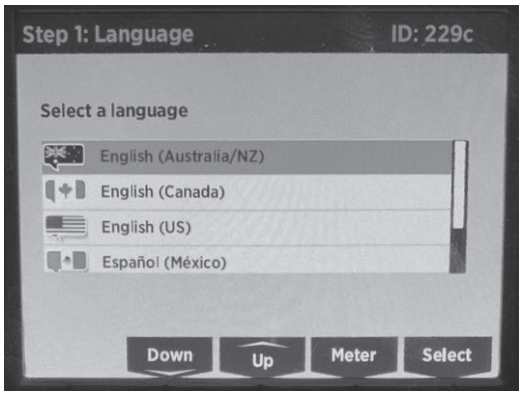

The evr-green 4000 has an on-screen Installation Wizard to guide you through setup and verification of the station for operation. Use the **Up** or **Down** buttons to scroll to the appropriate choice and use the **Select** button to make choices. You are guided to select things like:

- Language
- New or replacement station
- Circuit installation information
- Notification of any station faults

When the Installation Wizard has been completed, you will see:

- The instructional video
- The status icon for each port displaying a green check mark
- No error messages
- No lit error LEDs

If any error messages display or LEDs are lit, resolve those issues before proceeding.

Secure the Head Assembly

Once you have verified the charging station is correctly wired, secure the head assembly.

1. Remove the L-wrench by rotating it to the right until the security tag breaks. Lift the head assembly slightly and remove the L-wrench.

   Note: Ensure the snaps on the top cap are fully engaged before lowering the head assembly.

2. Lower the head assembly. Ensure the head assembly is fully seated and that no gap exists between the bottom of the head assembly and the housing. The head assembly fits tightly and may require extra downward force to ensure it is fully seated.

3. Using the L-wrench, tighten the two security set screws inside the holsters to approximately 2.8 to 3.4 Nm (2 to 2.5 ft-lbs).

4. Cover the screws using the two rubber plugs.
5. Insert the charging cables into their corresponding holsters.

Pinpoint the Station

Follow these instructions if your smartphone has a scanning app:

1. Open the QR Code scanning app.
2. Point the camera at the code on the screen. The app automatically reads the MAC address of the charging station.
3. Follow the online instructions.

Follow these instructions if your smartphone does not have a scanning app:

1. Using your smartphone, navigate to https:/m.chargepoint.com.
2. Log into the ChargePoint mobile site from your smartphone with your installer login.
3. Enter the MAC address and activation password printed on the activation label, and touch **Next**.

4. Confirm that you are installing a new charging station.
5. When prompted, touch **OK** to share your GPS location data with the ChargePoint mobile site.
6. When prompted, touch **OK** to review the station's location on Google Maps.
7. Review the station address and zoom in to review the initial position of the station's pin on the map.
8. Using your finger, move the pin to the correct parking spot location.
9. If needed, manually adjust the address of the Evr-Green 4000 location.
10. Take a picture of the station using your smartphone.
11. Scroll down to "Upload a Station Picture" and choose the station picture.
12. Add any helpful information for drivers.
13. Touch **Submit** to pinpoint the Evr-Green 4000 on the ChargePoint map. The mobile page displays a 3-digit PIN code.
14. Press **Continue** on the station.

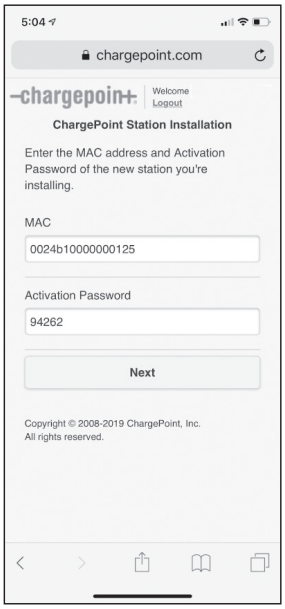

15. Enter the PIN code on the charging station.

16. Tap **Done** on the mobile page.

17. The installation wizard proceeds to perform a network test. When complete, press **Continue** until you exit the installation wizard.

Start a Charging Session

Once the installation wizard is complete, use the ChargePoint app to start a test session. Verify that you can:

- Initiate a charging session
- Unlock the holster and pull out the charge handle
- Plug the handle into the emulator (if available)
- Holster the handle
- Verify that the handle is locked again

Activating a Leviton Charger:

To activate the charger, the activation worksheet and installation checklist must be completed.

For assistance please call: 1-800-824-3005 (USA ONLY) or
1-800-405-5320 (Canada Only) www.leviton.com

WARRANTY AND CONTACT INFORMATION

Warranty Information and Disclaimer

The Warranty you received with your Charging Station is subject to certain exceptions and exclusions. For example, your use of, or modification to, the ChargePoint® Charging Station in a manner in which the ChargePoint® Charging Station is not intended to be used or modified will void the limited warranty. You should review your warranty and become familiar with the terms thereof. Other than any such limited warranty, the ChargePoint products are provided "AS IS," and ChargePoint, Inc. and its distributors expressly disclaim all implied warranties, including any warranty of design, merchantability, fitness for a particular purposes and non-infringement, to the maximum extent permitted by law.

Limitation of Liability

CHARGEPOINT AND ANY OF ITS DISTRIBUTORS ARE NOT LIABLE FOR ANY DIRECT, INDIRECT, INCIDENTAL, SPECIAL, PUNITIVE OR CONSEQUENTIAL DAMAGES, INCLUDING WITHOUT LIMITATION LOST PROFITS, LOST BUSINESS, LOST DATA, LOSS OF USE, OR COST OF COVER INCURRED BY YOU ARISING OUT OF OR RELATED TO YOUR PURCHASE OR USE OF, OR INABILITY TO USE, THE CHARGING STATION, UNDER ANY THEORY OF LIABILITY, WHETHER IN AN ACTION IN CONTRACT, STRICT LIABILITY, TORT (INCLUDING NEGLIGENCE) OR OTHER LEGAL OR EQUITABLE THEORY, EVEN IF CHARGEPOINT KNEW OR SHOULD HAVE KNOWN OF THE POSSIBILITY OF SUCH DAMAGES. IN ANY EVENT, THE CUMULATIVE LIABILITY OF CHARGEPOINT FOR ALL CLAIMS WHATSOEVER RELATED TO THE CHARGING STATION WILL NOT EXCEED THE PRICE YOU PAID FOR THE CHARGING STATION. THE LIMITATIONS SET FORTH HEREIN ARE INTENDED TO LIMIT THE LIABILITY OF CHARGEPOINT AND SHALL APPLY NOTWITHSTANDING ANY FAILURE OF ESSENTIAL PURPOSE OF ANY LIMITED REMEDY.

FOR CANADA ONLY

For warranty information and/or product returns, residents of Canada should contact Leviton in writing at **Leviton Manufacturing of Canada ULC** to the attention of the **Quality Assurance Department, 165 Hymus Blvd, Pointe-Claire (Quebec), Canada H9R 1E9 or by telephone at 1 800 405-5320.**

LIMITED 1 YEAR WARRANTY AND EXCLUSIONS

Leviton warrants to the original consumer purchaser and not for the benefit of anyone else that this product at the time of its sale by Leviton is free of defects in materials and workmanship under normal and proper use for one year from the purchase date. Leviton's only obligation is to correct such defects by repair or replacement, at its option. **For details visit www.leviton.com or call 1-800-824-3005.** This warranty excludes and there is disclaimed liability for labor for removal of this product or reinstallation. This warranty is void if this product is installed improperly or in an improper environment, overloaded, misused, opened, abused, or altered in any manner, or is not used under normal operating conditions or not in accordance with any labels or instructions. **There are no other or implied warranties of any kind, including merchantability and fitness for a particular purpose**, but if any implied warranty is required by the applicable jurisdiction, the duration of any such implied warranty, including merchantability and fitness for a particular purpose, is limited to one year. **Leviton is not liable for incidental, indirect, special, or consequential damages, including without limitation, damage to, or loss of use of, any equipment, lost sales or profits or delay or failure to perform this warranty obligation**. The remedies provided herein are the exclusive remedies under this warranty, whether based on contract, tort or otherwise.

For Technical Assistance Call: 1-800-824-3005 (USA Only) or 1-800-405-5320 (Canada Only) www.leviton.com

© 2021 Leviton Manufacturing Co., Inc. All rights reserved.