Tri-Power Pop-up Receptacles

Quick Installation Setup Guide:

Key Benefits

- Available in seven different finishes
- Water and tamper-resistant face
- Compact shallow design minimizes space in cabinet
- Complies with UL 498 spill test
- Easy push down to pop up function is rated for a minimum of 10,000 cycles (OPEN/CLOSE)
- Permanent installation ready (suitable for MC cable or non-metallic sheath cable)

Installing the Countertop Receptacle

Before installing the Hubbell Countertop Receptacles.

Note: ***There are different components that will be used throughout the installation. This includes the housing, base, countertop flange, receptacle cover, locking nut and installation screws.***

General Information

1. **Notice:** For installation by a qualified electrician in accordance with the national and local electrical code and the following instructions.

2. **Caution: RISK OF ELECTRICAL SHOCK.** Disconnect power before installing.

3. **Notice:** For indoor use only.

4. Check that the device's type and rating are suitable for the application.

5. Refer to PD2909 for complete instructions and warnings.

HUBBELL®
Wiring Device-Kellems

www.hubbell.com/wiringdevice-kellems

Step 1

Cut a circular hole 4.00” to 4.16” in diameter in the countertop. Then, determine what color silicon top to use, peel off the protective tab to expose adhesive surface on the pop-up tower, snap on that cover.

For black color RCT600BK & RCT620BK and white color RCT600W & RCT620W, skip this step, go to step 2 and start installing.

Step 2

Remove the base from the housing to expose screw terminals.

Step 3

CAUTION:
Before handling the cable, make sure the circuit is OFF.
Place the tightening ring on the cable whip before wiring the device. Feed cable through the lock nut under the countertop, as this will secure the device later. Fasten the metal jacket to the device base. A fitting will be required (not included).

If using non-metallic shealth cable (Romex®), use the strain relief built into the base of the unit. If other cable is used, a knockout is available for placement of the appropriate fitting, as required by the installer.

Step 4

Strip conductors to the correct length as shown on the device.

Ground the base by bonding the green or bare wire to the grounding screw on the base.

Step 5

Terminate the green or bare wire to the green screw marked ground termination symbol. Terminate the white or gray wire to the white screw marked “WHITE” and black or red wire to the brass screw marked “HOT”.

Step 6

Reattach the base to the housing and secure with screws.

Step 7

Insert the device into the countertop opening and hand tighten the lock nut to secure the device in place.

Step 8

Terminate the device to the power source. Press the cover to pop up the receptacle to use, press again to close.

Quick Installation Setup Guide

Because Spills Happen

Hubbell countertop receptacles are spill test compliant

COUNTERTOP RECEPTACLES

Description	Finish	Color/ Material	15A 125V Receptacle		20A 125V Receptacle	
			Surface Mount	Flush Mount	Surface Mount	Flush Mount
Tamper-resistant pop-up kitchen counter receptacle, rated for 20A circuits Cover: machined aluminum, wiring chamber accepts ½" MC or non-metallic sheath cable	Powder Coated	Black	RCT200BK	RCT201BK	RCT220BK	RCT221BK
		White	RCT200W	RCT201W	RCT220W	RCT221W
		Bronze	RCT200BZE	RCT201BZE	RCT220BZE	RCT221BZE
	Brushed	Aluminum	RCT200ALU	RCT201ALU	RCT220ALU	RCT221ALU
		Brass	RCT200BR	RCT201BR	RCT220BR	RCT221BR
		Nickel	RCT200NI	RCT201NI	RCT220NI	RCT221NI
	Polished	Chrome	RCT200CH	RCT201CH	RCT220CH	RCT221CH
Tri-power AC, includes: tamper-resistant pop-up kitchen counter receptacle, USB Type AC and wireless inductive, rated for 20A circuits Cover: machined aluminum, wiring chamber accepts ½" MC or non-metallic sheath cable; surface mount only	Powder Coated	Black	RCT600BK	—	RCT620BK	—
		White	RCT600W	—	RCT620W	—
		Bronze	RCT600BZE	—	RCT620BZE	—
	Brushed	Aluminum	RCT600ALU	—	RCT620ALU	—
		Brass	RCT600BR	—	RCT620BR	—
		Nickel	RCT600NI	—	RCT620NI	—
	Polished	Chrome	RCT600CH	—	RCT620CH	—

Black White Aluminum Brass Nickel Chrome Bronze

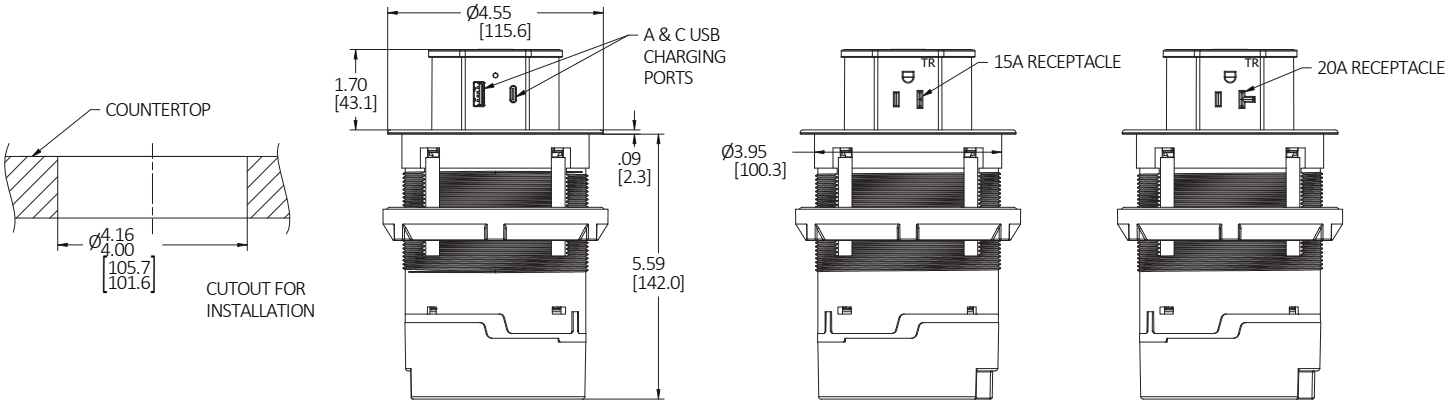

HUBBELL®
Wiring Device-Kellems

www.hubbell.com/wiringdevice-kellems