NOTES:
1) ALL DIMENSIONS ARE IN INCHES.
2) LABEL FIELDS PROVIDED ATTACHED TO THE PATCH PANEL.
3) CABLE MANAGMENT BAR DOES NOT COME PREASSEMBLED.

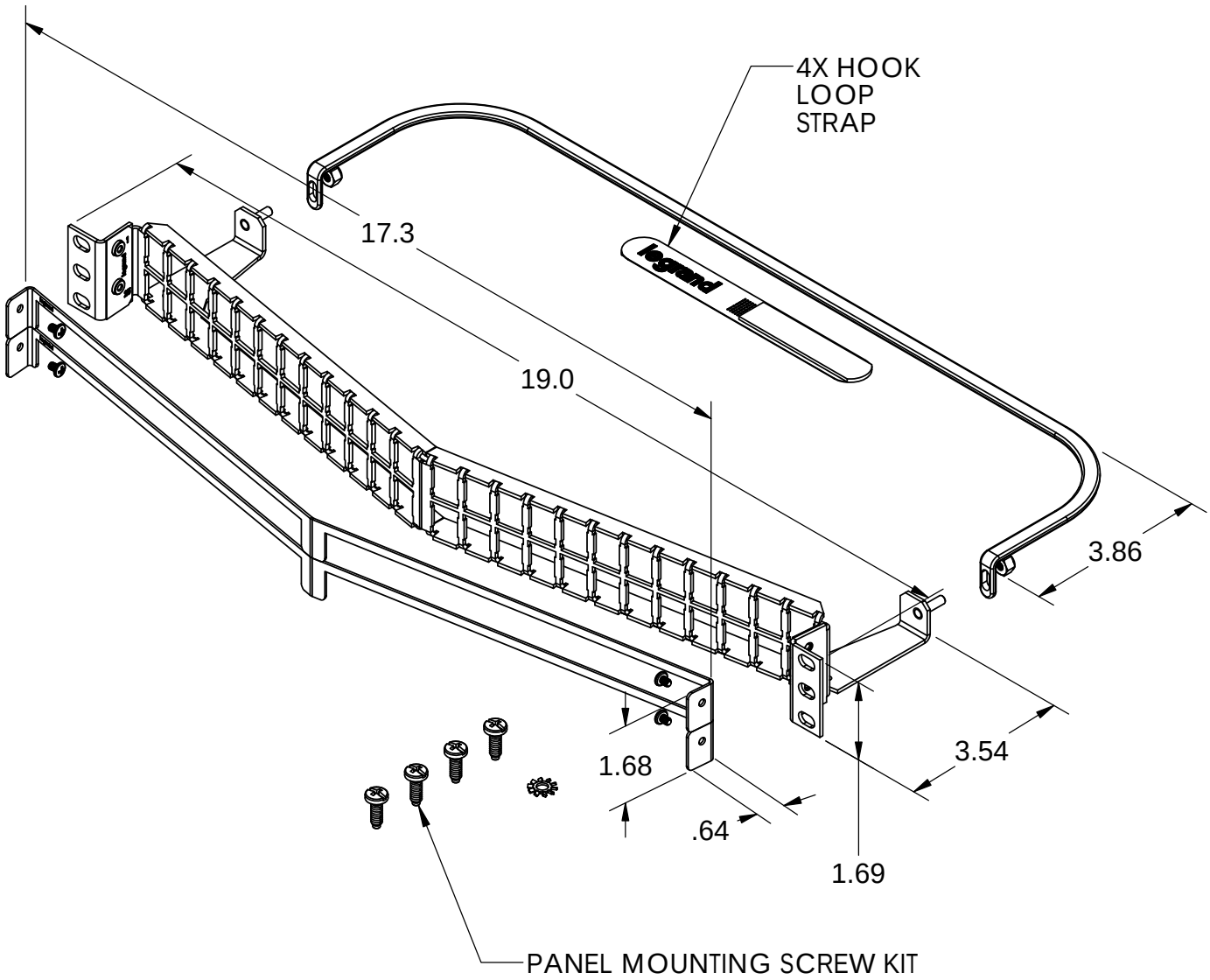

*** NOTICE ***
THIS DOCUMENT CONTAINS CONFIDENTIAL AND/OR PROPRIETARY INFORMATION INTENDED FOR USE ONLY BY THE INDIVIDUAL(S) PROVIDED. NEITHER THIS DOCUMENT, NOR ANY INFORMATION CONTAINED HEREIN, MAY BE COPIED, DISTRIBUTED, DISCLOSED TO ANY THIRD PARTY OR USED IN ANY MANNER OTHER THAN FOR WHICH IT HAS BEEN PROVIDED, WITHOUT THE PRIOR WRITTEN CONSENT OF LEGRAND, INC. MANUFACTURING RELEASE, PRODUCT SPECIFICATIONS AND STANDARDS ARE SUBJECT TO CHANGE WITHOUT NOTICE.

legrand® WWW.LEGRAND.US

TITLE
KIT, LABEL FIELD, 1U, 48 PORT, FIBER, ANGLED

	NAME	DATE
DWN	RJG	10/6/2017
CHK	NR	10/9/2017
APPR	RH	12/8/2017

SIZE	CAD FILE	DWG NO	REV
A	PHAFMU48C	PHAFMU48	02

SCALE 1:3 SHEET 1 OF 1