NOTES:

1. DUSTCAPS ARE PROVIDED INSTALLED.
2. DIMENSIONS ARE IN INCHES.
3. THE "–XX" AT THE END OF THE PART NUMBER SHALL INDICATE THE COLOR OF HOUSING. COLOR SHALL BE IN ACCORDANCE WITH ORTRONICS SPECIFICATION #OR–71601388.

⬡ INDICATES NOTE REFERENCE

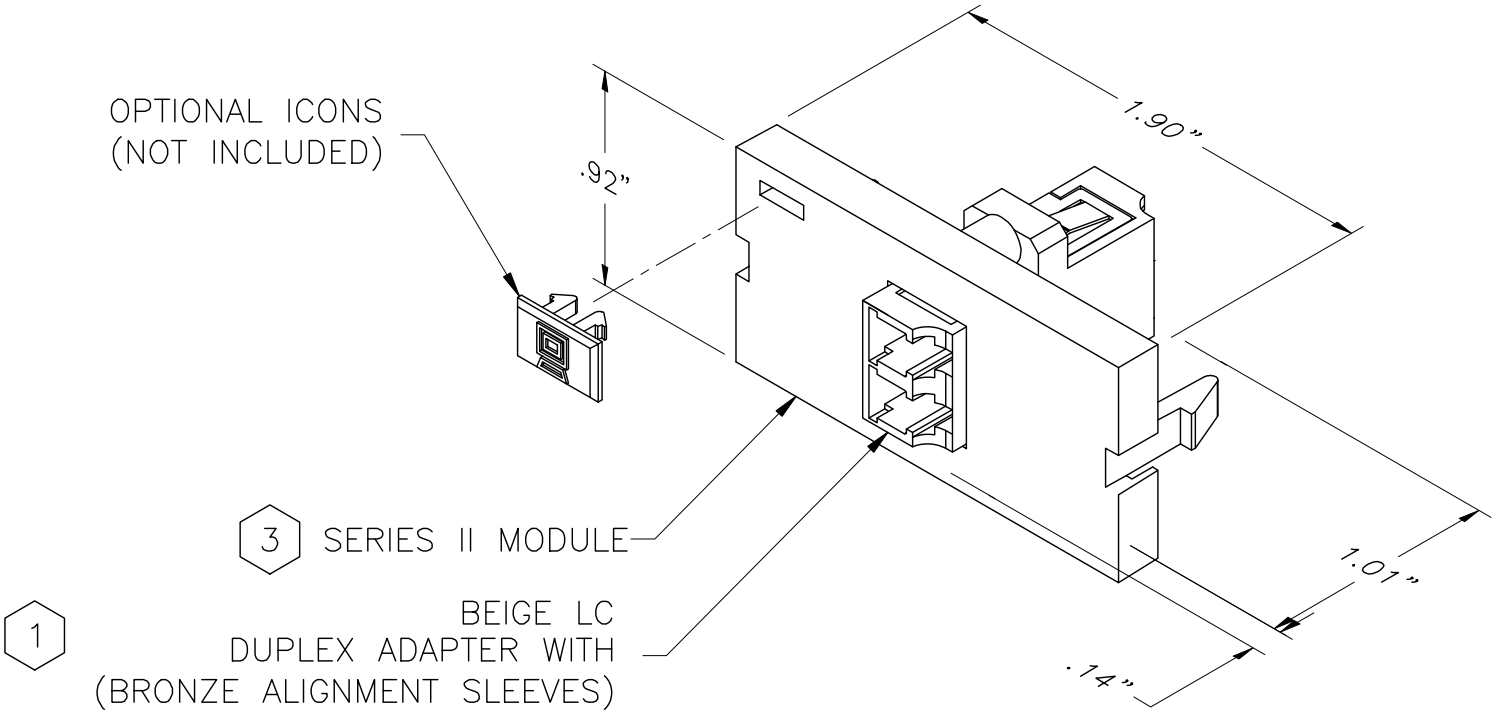

*** NOTICE ***
THIS DOCUMENT CONTAINS CONFIDENTIAL AND/OR PROPRIETARY INFORMATION INTENDED FOR USE ONLY BY THE INDIVIDUAL(S) SPECIFIED HEREIN AND ONLY FOR THE PURPOSE(S) PROVIDED. NEITHER THIS DOCUMENT, NOR ANY INFORMATION CONTAINED HEREIN, MAY BE COPIED, DISTRIBUTED, DISCLOSED TO ANY THIRD PARTY OR USED IN ANY MANNER OTHER THAN FOR WHICH IT HAS BEEN PROVIDED, WITHOUT THE PRIOR WRITTEN CONSENT OF ORTRONICS, INC.

ORTRONICS®
NEW LONDON, CT 06320
(860) 445–3800

DWN.BY: DUPREY	DATE 01/17/05	
CHK.BY: AM	01/20/05	
APP.BY: RZ	01/31/05	

TITLE: SERIES II, LC DUPLEX BEIGE ADAPTER MULTIMODE, BRONZE SLEEVES, 180, 1U

SIZE	CAD FILE	PART NUMBER	REV
A	60900346XXC	OR–60900346–XX	04

SCALE	REL DATE	SHEET
NONE	06/04/09	1 OF 1