Applications Cookbook

Provolt™ Room Controller (PRC)

Version 7.0

FOR REFERENCE ONLY

TABLE OF CONTENTS

PAGE	DESCRIPTION
4	PRC Classroom
5	PRC Classroom
6	PRC Common Area
7	PRC Daylighting With Photocell
8	PRC Daylighting For Different Fenestrations with Photocell
9	PRC Demand Response Terminations
10	Dual Relay Provolt ODC Sensor with Override Switch
11	Dual Relay Provolt ODC Sensor with Override Switch and Power Pack for Low Voltage HVAC Dry Contact Closure
12	PRC Large Space, Single Zone, Auto ON/OFF Only
13	Provolt Large Space, Two Zone, Auto ON/OFF Only
14	Provolt ODC Sensor with Override Switch
15	Provolt ODC Sensor with Power Pack For Low Voltage HVAC Dry Contact Closure
16	Provolt Photocell with Optional Override Switch
17	Provolt Photocell with Wallbox Sensor
18	Provolt Photocell with Optional Override Switch
19	Provolt Photocell, Single Zone, Two Sensors
20	Provolt Photocell, Two Zone, Two Sensors with Optional Override Switch
21	Restroom with Fan Control
22	Small Office, Single Zone
23	Small Office, Two Zone
24	Stairwell Bi-Level Control
25	Stairwell Landing, Single Zone
26	Stairwell Landing, Two Zone
27	UL924 Bypass Daylight Harvesting, Provolt Dimming, 2 Zones
28	UL924 Bypass 0-10V, 4-Wire Provolt Dimmed Load
29	UL924 Bypass Provolt Auto ON/OFF, Manual ON/OFF

PRC COOKBOOK NOTES

1. Refer to manufacturer's data sheets and installation instructions prior to installation
2. Line feed 120/230/277 VAC, 60 Hz
3. Ground not shown, ground devices per applicable national and local codes are best practices
4. For emergency power situations, illustrations assume transfer switch by others upstream of shown devices
5. Line voltage load not to exceed contact rating per device specifications
6. Power packs receiving separate feeds for switched loads and self power must have both feeds on the same phase
7. All low voltage devices consume current. Device power budget is estimated for these details—additional power sources may be required. See product literature for power specifications.
8. Maximum run length for analog wiring is 1000' @ #18 AWC
9. Sensors wired in parallel will cause line voltage relay closure when occupancy is detected by any unit
10. Devices in series requiring contact closure from a single device (clock input, demand response, emergency, etc.) must follow these wiring conventions:
    - First device in sequence provides the +V to the triggering relay
    - Signal from closure attached to all devices in sequence input
    - Com from first device in sequence attached to com on all devices in sequence
11. Applications requiring multiple power packs/power supplies at the same VDC:
    - +V must never be tied together between power packs/power supplies
    - Com/DCC must be tied together to all power packs/power supplies and all powered devices
12. Ultrasonic ceiling mount sensors should be located a minimum of six (6) feet from HVAC supply/return vents
13. Ceiling sensors mounted over doorways should be placed one (1) foot inside the threshold
14. Trough-mounted and pendant-mounted indirect lighting sources affect the operation of locally mounted sensors. Contractor is responsible for adjusting sensor locations to allow for proper operation
15. Contractor is responsible for proper sensitivity and time delay settings for non-adaptive products, following the manufacturer's recommended placement, and field verification of circuits with respect to power pack placement
16. Contractor is responsible for coordinating the operational options of sensors and power packs with the specific work requirements
    - Work relevant energy code requirements affect circuits to be controlled and their control characteristics
    - One controlled relay is required for reach controlled circuit
    - Refer to power pack data sheet for power output and installation guide for maximum number of sensors connected to a control device
    - Multiple control circuits may be controlled by a sensor/multiple sensors. Refer to the product installation manuals for interconnection details
17. Up to 100 Mark VII style ballasts may be controlled per daylighting zone by IRC
18. All relays shown in de-energized state
19. Individually cap off unused leads
20. One-line parenthesis use:
    - (X) Function
    - [#] Terminal
21. N-Way Switching
    - Wireless N-Way Switching/Dimming
      - One device is connected for all control, remaining are connected for device power only. Switching and dimming control are coordinated wirelessly between participating devices.
    - High Voltage 3-Way Switching
      - Per industry standards: (2) high voltage travellers plus (1) high voltage line/load per switch. Switch equal to Leviton 1223-W (Toggle) or 5623-2 (Decora) unless otherwise noted
    - Low Voltage Analog Maintained 3-Way Switching
      - (2) #18 AWG source plus (1) #18 AWG signal per switch. Switch equal to Leviton 1223-W (Toggle) or 5623-2 (Decora) unless otherwise noted
    - Low Voltage Analog Momentary N-Way Switching
      - (1) #18 AWG Source plus (1) #18 AWG signal per switch. Quantity of low voltage momentary switches as required. Terminated in parallel.
    - Digital Stations
      - Digital stations are software programmable and should be wired according to their digital communications
22. Plug Load Control - Commercial receptacle P/Ns:
    - Standard Duplex
      - Split control (1 outlet) CR015-1PX, CR020-1PX
      - Full control (2 outlets) CR015-2PX, CR020-2PX
    - Decora
      - Split control (1 outlet) 16252-1PX,16352-1PX
      - Full control (2 outlets) 16252-2PX, 16352-2PX
23. Control Receptacle:
    - Quantity per applicable codes
    - Termination shown split receptacle. Termination per applicable codes
    - Receptacle markings per applicable energy codes

ABBREVIATIONS:

LC	LumaCAN
LV	Low voltage
HV	High voltage switch (maintained)
LVM	Low voltage switch (momentary) Equal to Leviton 1081 (toggle) OR Leviton 56081 (Decora)
LVT	Low voltage switch (maintained) Equal to Leviton 12021-2 (toggle) or Leviton 56021-2 (Decora)
LV2	IRC low voltage switch
UON	Unless otherwise noted
BLK	Black
WHT	White
BLU	Blue
YEL	Yellow
ORG	Orange
VIO	Violet
BRN	Brown

SYMBOLS:

No Connection

Connection

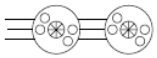
Devices wired in parallel

PRC CLASSROOM

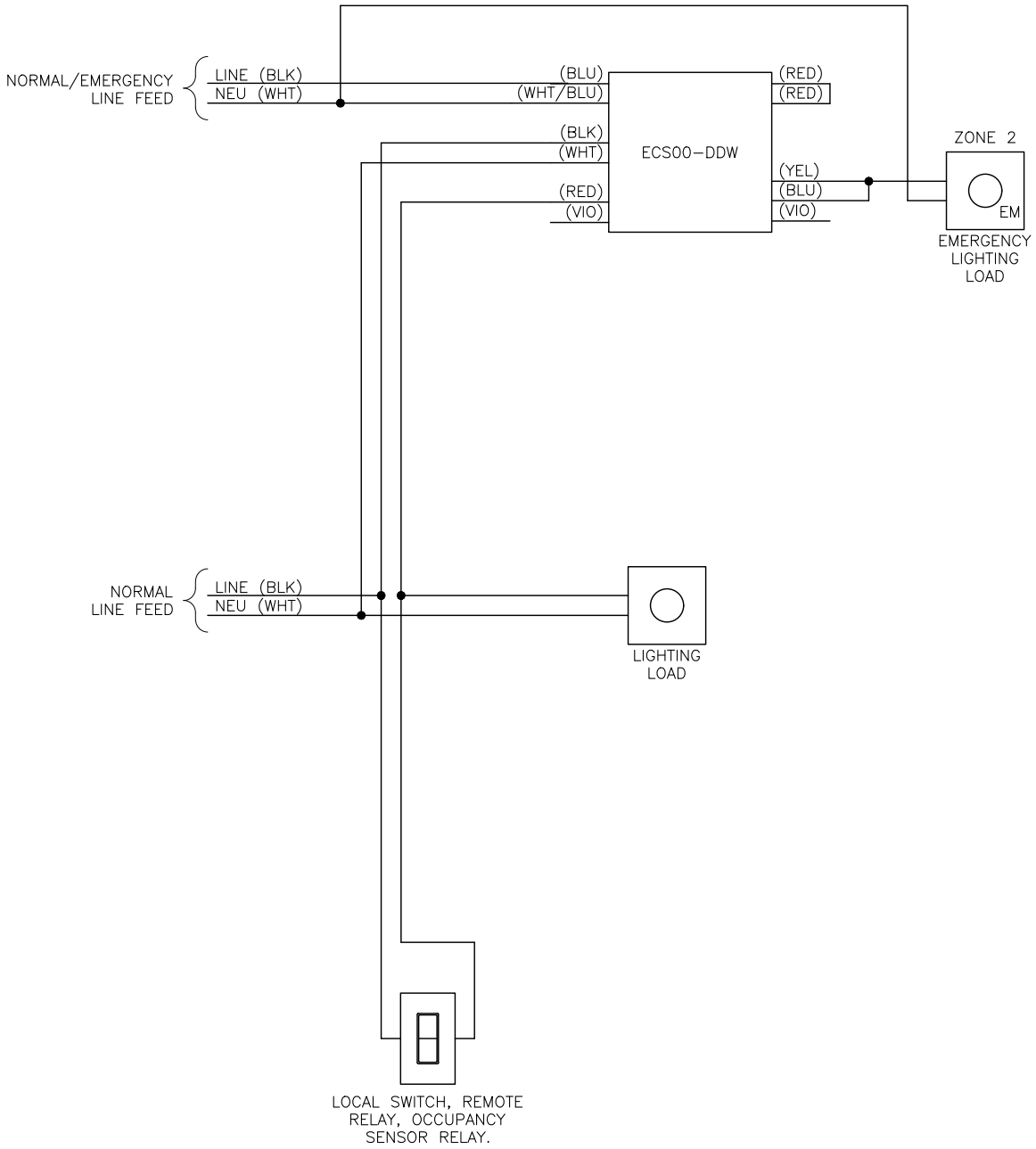

PRC CLASSROOM

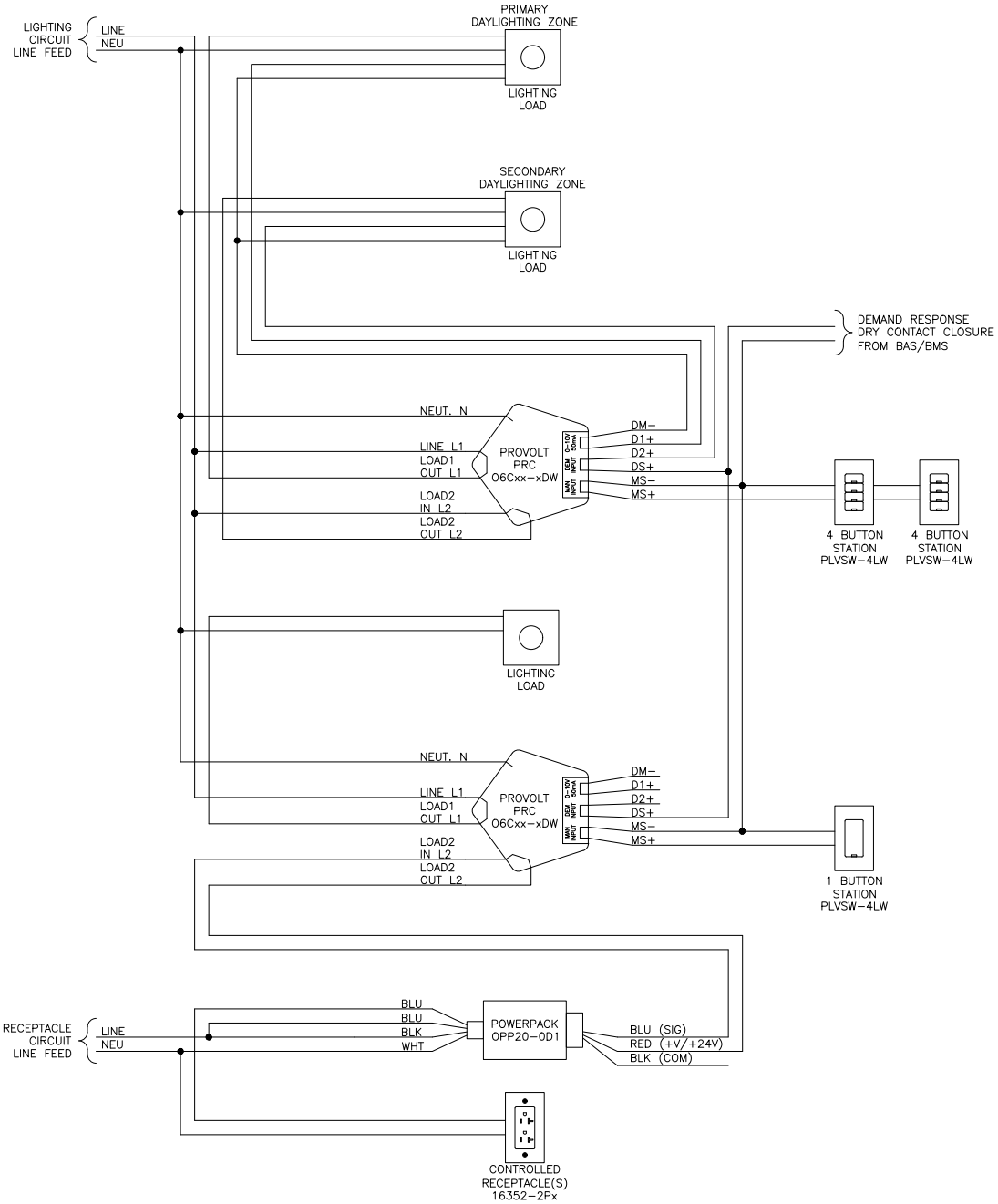

PRC COMMON AREA

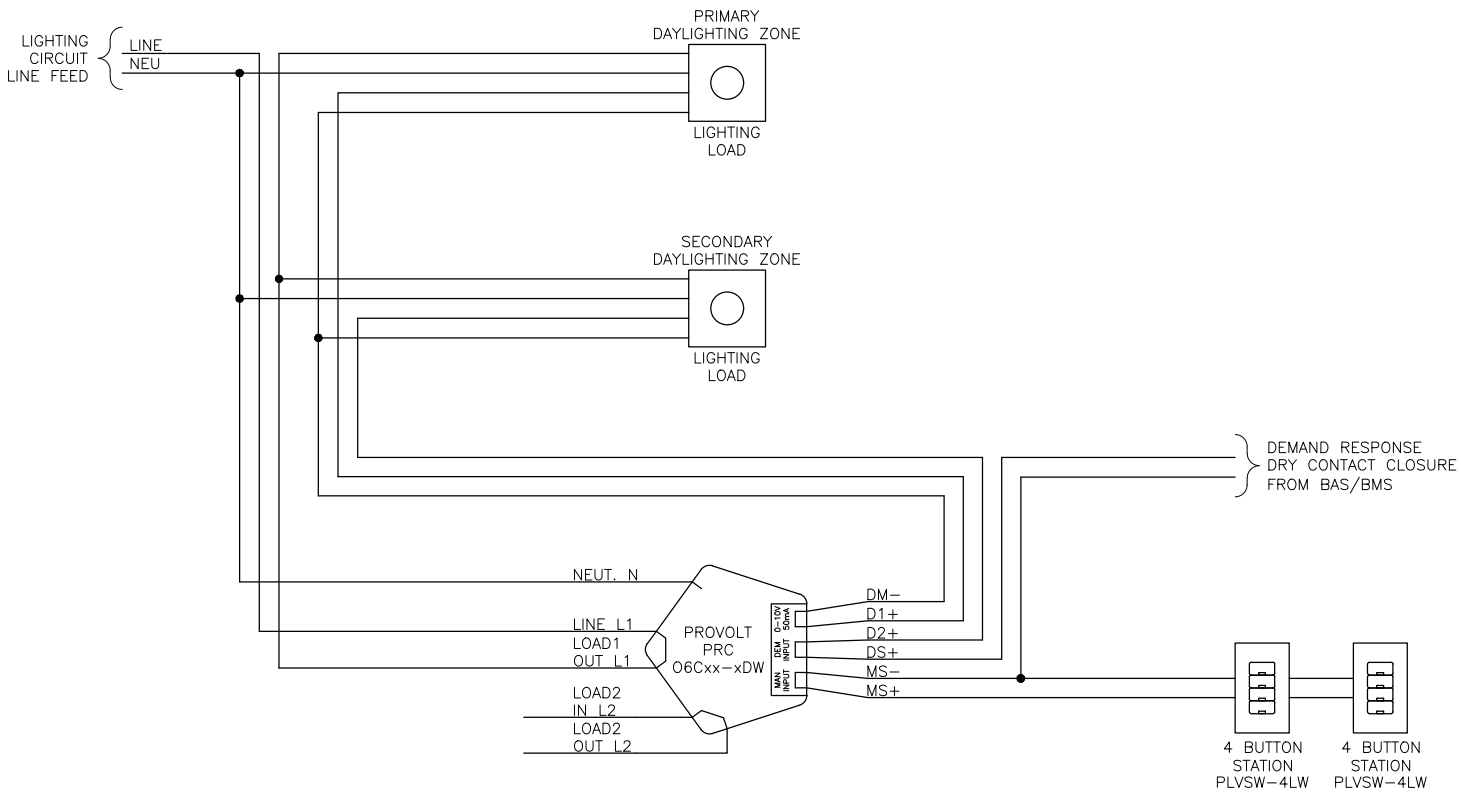

PRC DAYLIGHTING WITH PHOTOCELL

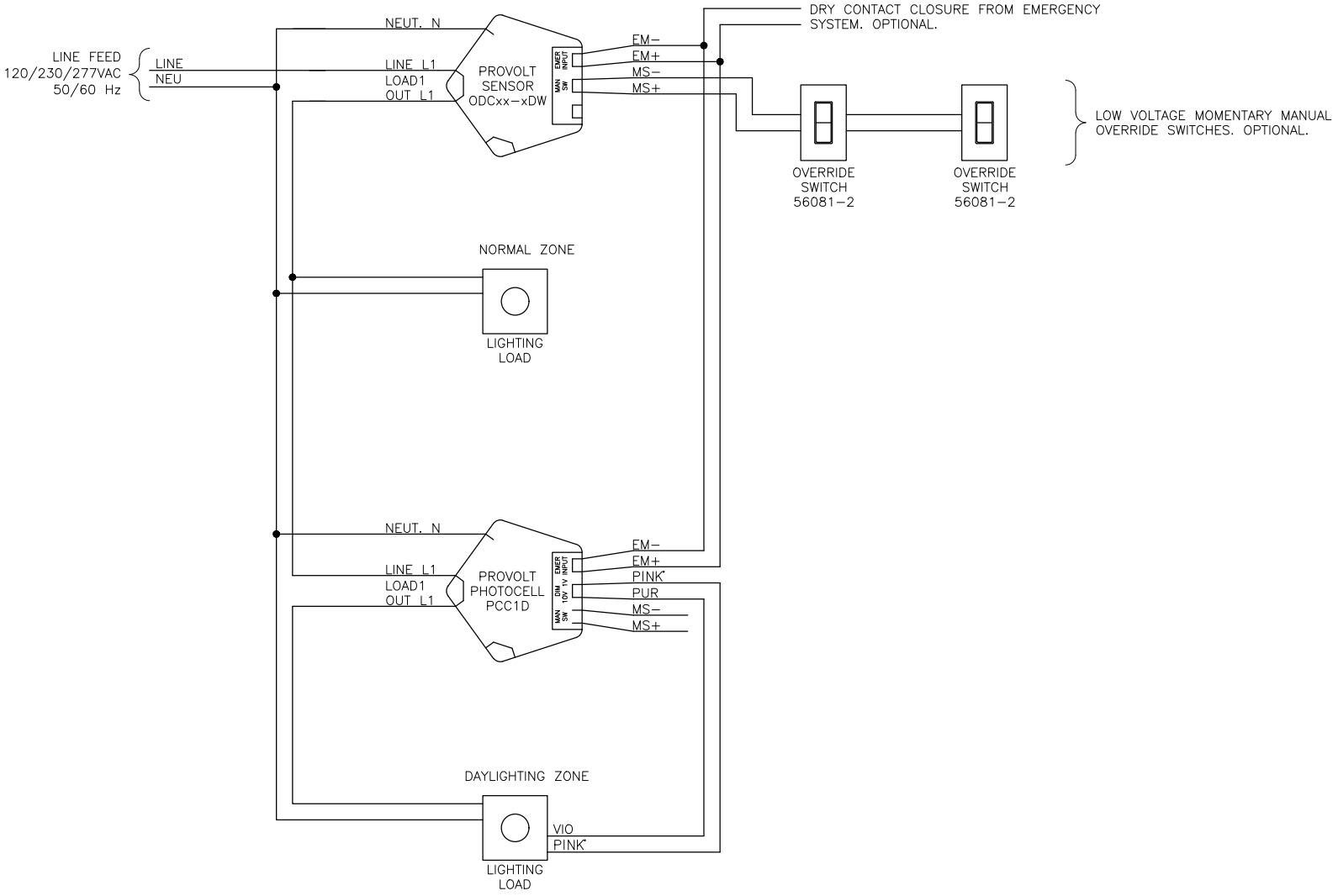

* Depending on manufacture date, pink wire may be gray

PRC DAYLIGHTING FOR DIFFERENT FENESTRATIONS WITH PHOTOCELL

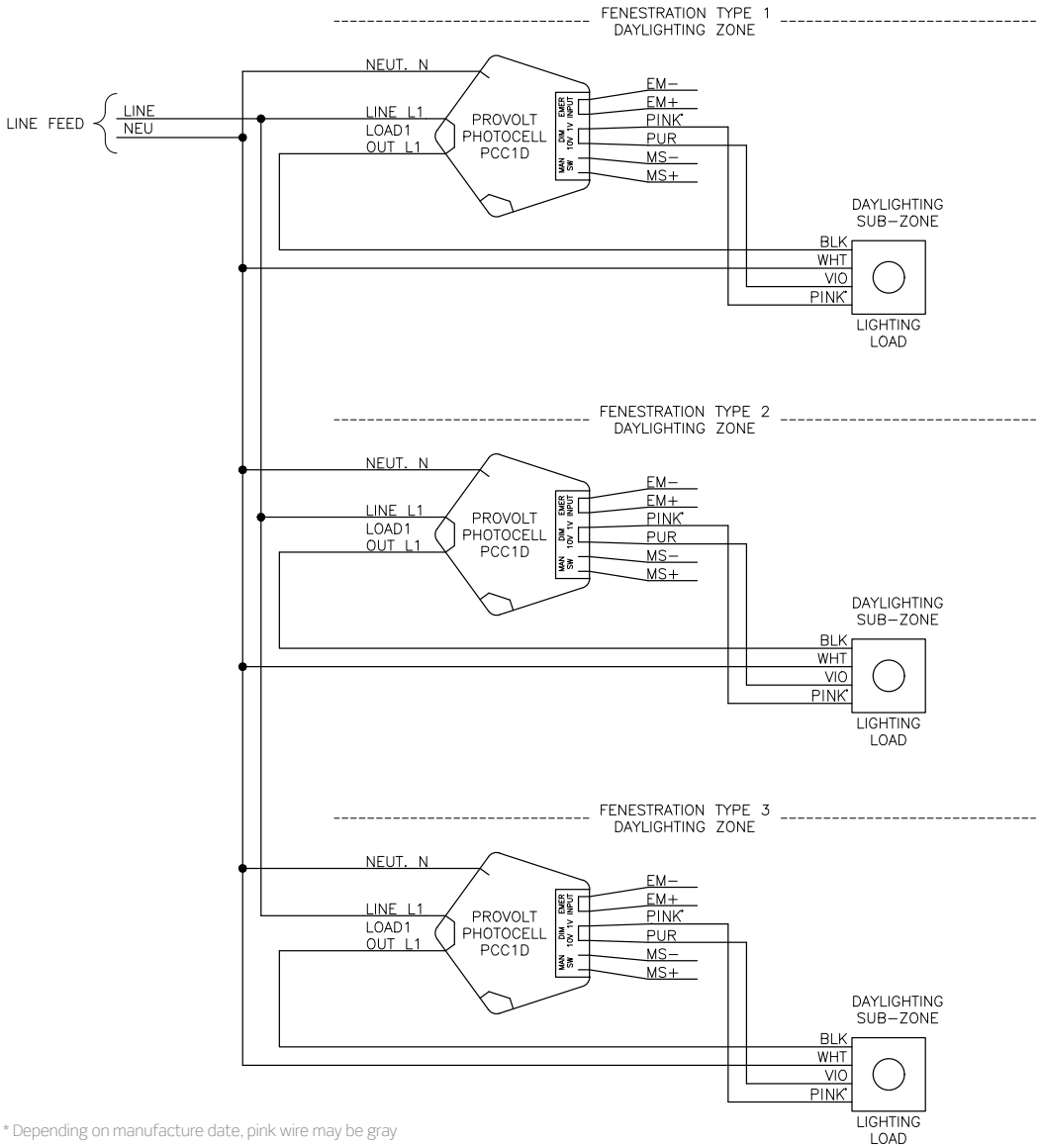

* Depending on manufacture date, pink wire may be gray

OPERATIONAL NOTE:

1. MULTIPLE PHOTOCELLS ARE NOT REQUIRED TO CONTROL LARGE, SINGLE ZONE AREAS INCLUDED IN A SINGLE FENESTRATION TYPE DAYLIGHTING ZONE.
2. PLACE SENSORS WITHIN ZONE TO BE SENSED/CONTROLLED.
3. ILLUSTRATED CIRCUIT WILL PROVIDE PROPER DAYLIGHTING FOR EACH DISSIMILAR FENESTRATION DAYLIGHTING ZONE. REQUIRES SPLITTING THE FIXTURE CIRCUIT INTO SEPARATE SUB−ZONES. REFER TO APPLICABLE ENERGY CODES FOR DAYLIGHTING REQUIREMENTS.
4. REFER TO SENSOR DATA SHEET TO ENSURE SENSOR RELAY RATING IS NOT EXCEEDED.

PRC DEMAND RESPONSE TERMINATIONS

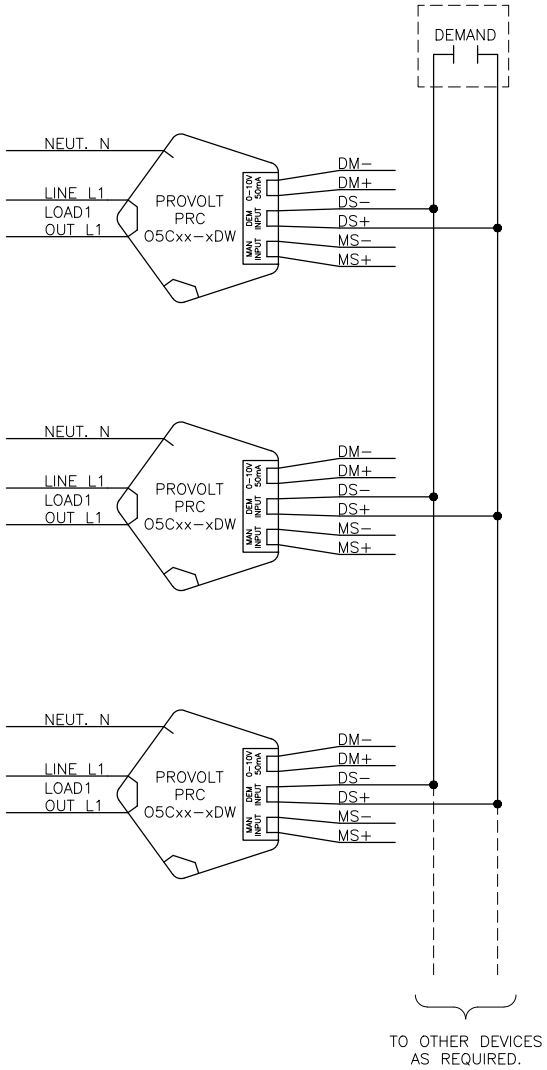

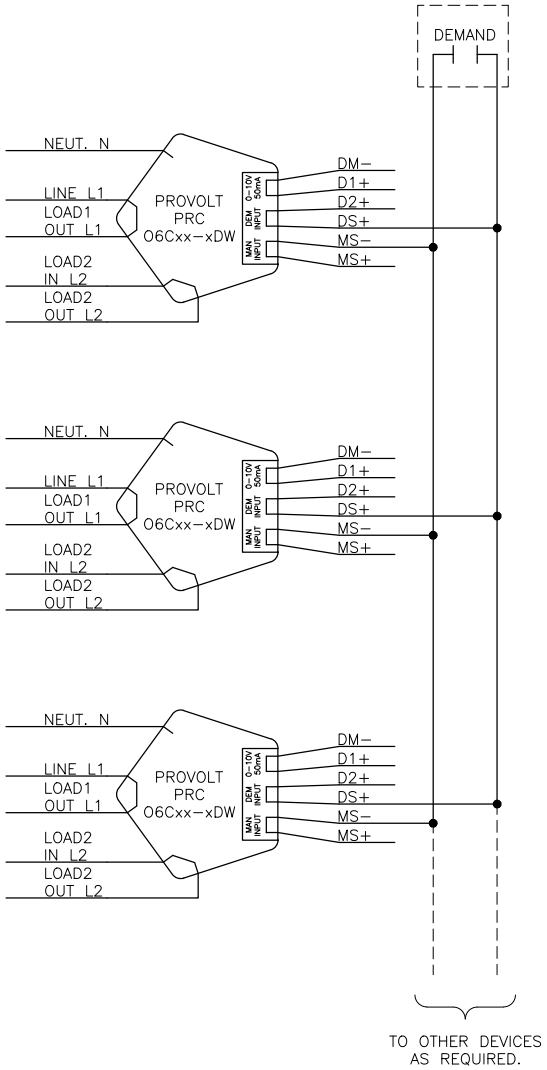

NOTES:

1. DEMAND RESPONSE
   - TRIGGERED BY DRY CONTACT CLOSURE.
   - DEMAND RESPONSE PER ENERGY CODE OPERATIONAL REQUIREMENT.
   - QUANTITY OF DEVICES TRIGGERED ON SAME CLOSURE NOT TO EXCEED 30.
2. OTHER CONNECTIONS NOT SHOWN FOR CLARITY. REFER TO PRODUCT INSTALLATION MANUALS FOR MORE INFORMATION.
3. ADDITIONAL DEVICES (AS REQUIRED) WIRE IN PARALLEL.

DUAL RELAY PROVOLT ODC SENSOR WITH OVERRIDE SWITCH

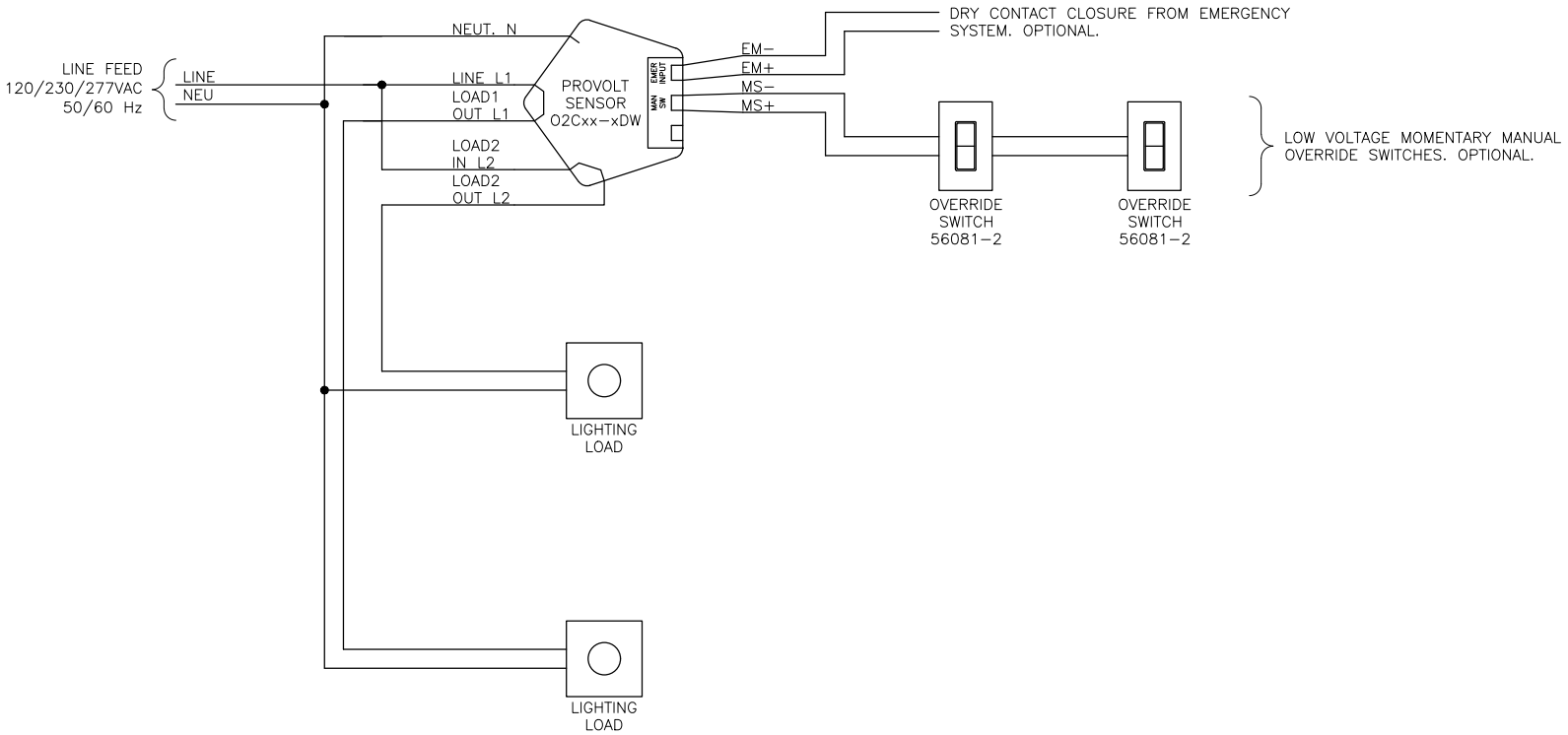

DUAL RELAY PROVOLT ODC SENSOR WITH OVERRIDE SWITCH AND POWER PACK FOR LOW VOLTAGE HVAC DRY CONTACT CLOSURE

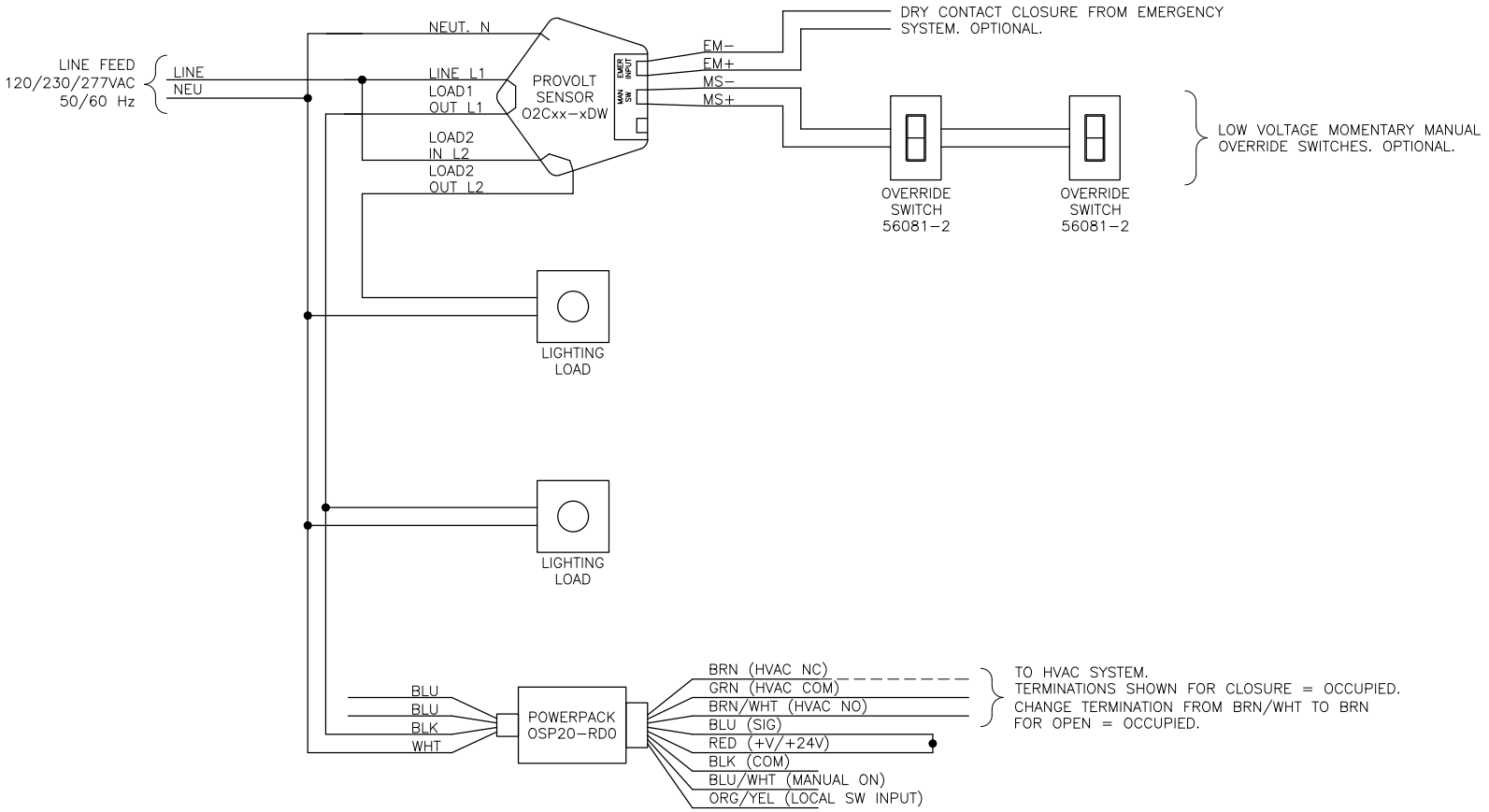

DESCRIPTION

1. THE POWER PACK CONTAINS A POWER SUPPLY, LINE LEVEL LOAD SWITCHING RELAY (NOT REQUIRED FOR THIS OPERATION) AND A LOW VOLTAGE HVAC ISOLATED RELAY.
2. THE BLACK LINE L1 (120-230-277VAC) WILL BE CONNECTED TO THE LINE FEED HOT (BLACK).
3. THE LINE OUT L1 WILL BE CONNECTED TO THE LOAD AND THE POWER PACK HIGH VOLTAGE BLACK.
4. ODC, POWER PACK, AND LOAD NEUTRALS WILL BE TERMINATED TO THE LINE FEED NEUTRAL (WHITE).
5. THE POWER PACK LOW VOLTAGE RED (24VDC) WILL BE TERMINATED TO THE POWER PACK BLUE (SIG).
6. THE HVAC SYSTEM WILL TERMINATE + VOLTAGE TO THE POWER PACK LOW VOLTAGE RELAY COMMON (GREEN). THE SECOND HVAC LEAD WILL TERMINATE TO EITHER THE NC (BROWN) OR NO (BROWN/WHITE) DEPENDING IF IT NEEDS TO SEE OPEN OR CLOSED CONTACT FOR OCCUPANCY, RESPECTIVELY.
7. INDIVIDUALLY CAP OFF UNUSED LEADS.
8. GROUND NOT SHOWN FOR CLARITY. GROUND AS REQUIRED BY NATIONAL AND LOCAL CODES AND BEST PRACTICES.

OPERATIONAL NOTES:

1. WHEN THE ODC ENERGIZES ITS ATTACHED LOAD, IT WILL ALSO ENERGIZE THE ATTACHED POWER PACK, CHANGING THE STATE OF THE HVAC RELAY FROM THE NORMAL POSITION.
2. WHEN THE ODC DE-ENERGIZES ITS ATTACHED LOAD, THE POWER PACK WILL ALSO BE DE-ENERGIZED, RETURNING THE HVAC RELAY TO THE NORMAL STATE.
3. HVAC RELAY MAY NOT FOLLOW ROOM OCCUPANCY UNDER TWO CONDITIONS:
   A. WHEN THE ODC IS SET TO OPERATE IN MANUAL ON MODE AND THE LOAD ISN'T ENERGIZED MANUALLY WITH OCCUPANCY;
   B. WHEN THE LOAD IS MANUALLY TURNED OFF WHILE THE ROOM IS STILL OCCUPIED.

PRC LARGE SPACE, SINGLE ZONE, AUTO ON/OFF ONLY

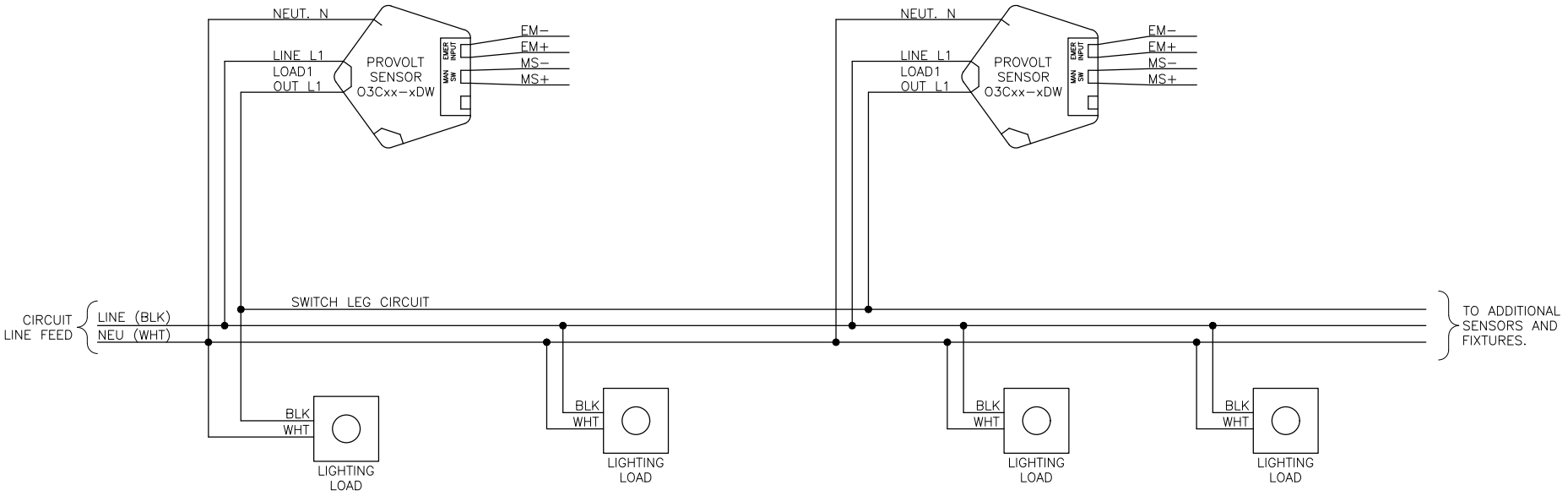

OPERATIONAL NOTE:

1. TO ENSURE OPERATIONAL SYNCHRONIZATION AND AVOID FALSE OFF SENSORS MUST OPERATE IN AUTO ON/OFF MODE ONLY, NO MANUAL CONTROL.
2. SENSORS MAY BE PLACED ASYMMETRICALLY WITH LIGHTING FIXTURES.
3. ANY SENSOR BECOMING ACTIVE WILL ENERGIZE ALL FIXTURES IN THE ZONE.
4. REFER TO SENSOR DATA SHEET TO ENSURE SENSOR RELAY RATING IS NOT EXCEEDED.

PROVOLT LARGE SPACE, TWO ZONE, AUTO ON/OFF ONLY

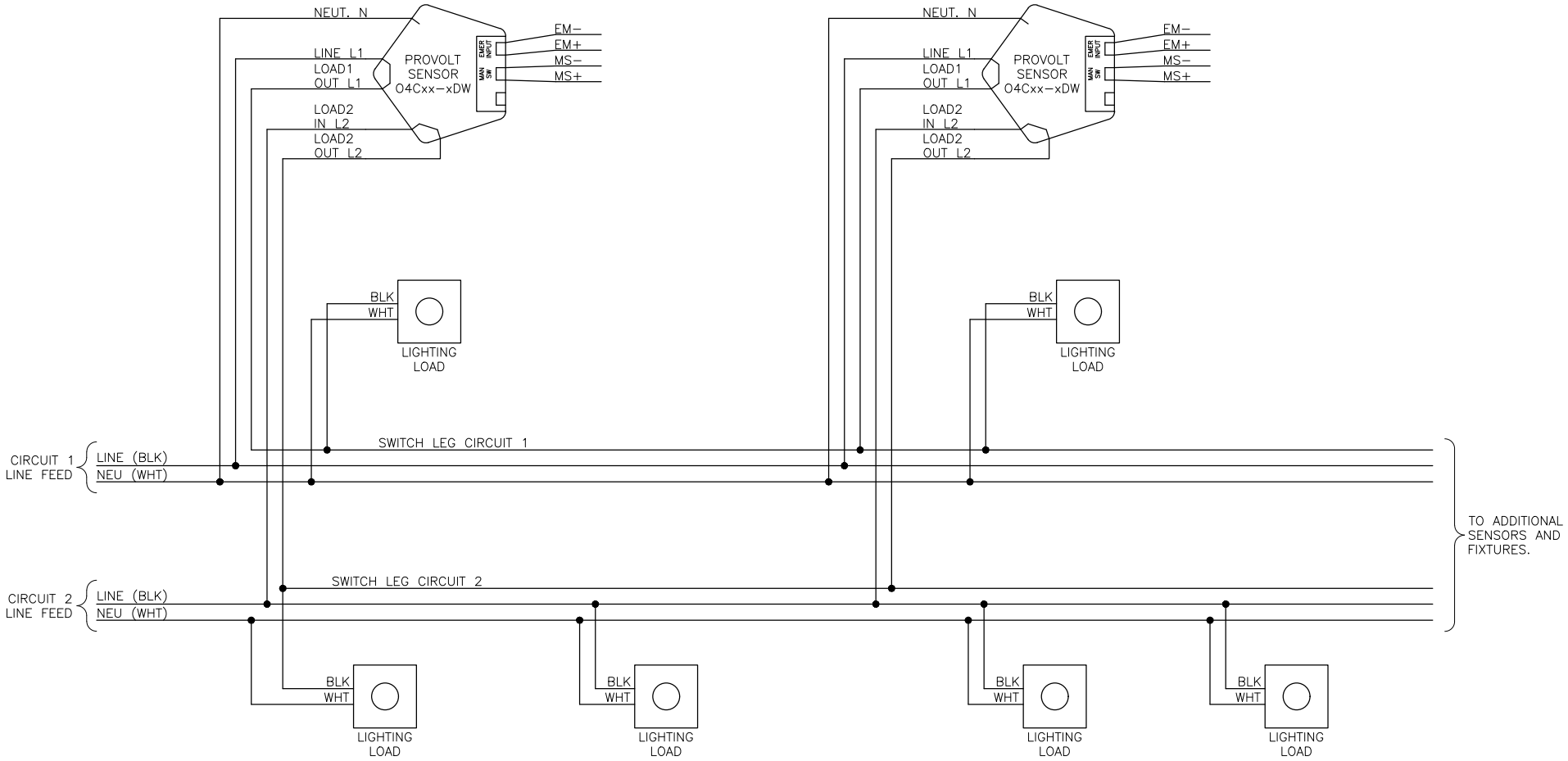

OPERATIONAL NOTE:

1. TO ENSURE OPERATIONAL SYNCHRONIZATION AND AVOID FALSE OFF:
   - SENSORS MUST OPERATE IN AUTO ON/OFF MODE ONLY, NO MANUAL CONTROL.
   - CIRCUIT CONTROL MUST NOT BE SET TO STAIRWELL MODE (ALTERNATING PRIMARY ON CIRCUIT).
2. SENSORS MAY BE PLACED ASYMMETRICALLY WITH LIGHTING FIXTURES.
3. ANY SENSOR BECOMING ACTIVE WILL ENERGIZE ALL FIXTURES IN THE ZONE.
4. REFER TO SENSOR DATA SHEET TO ENSURE SENSOR RELAY RATING IS NOT EXCEEDED.

PROVOLT ODC SENSOR WITH OVERRIDE SWITCH

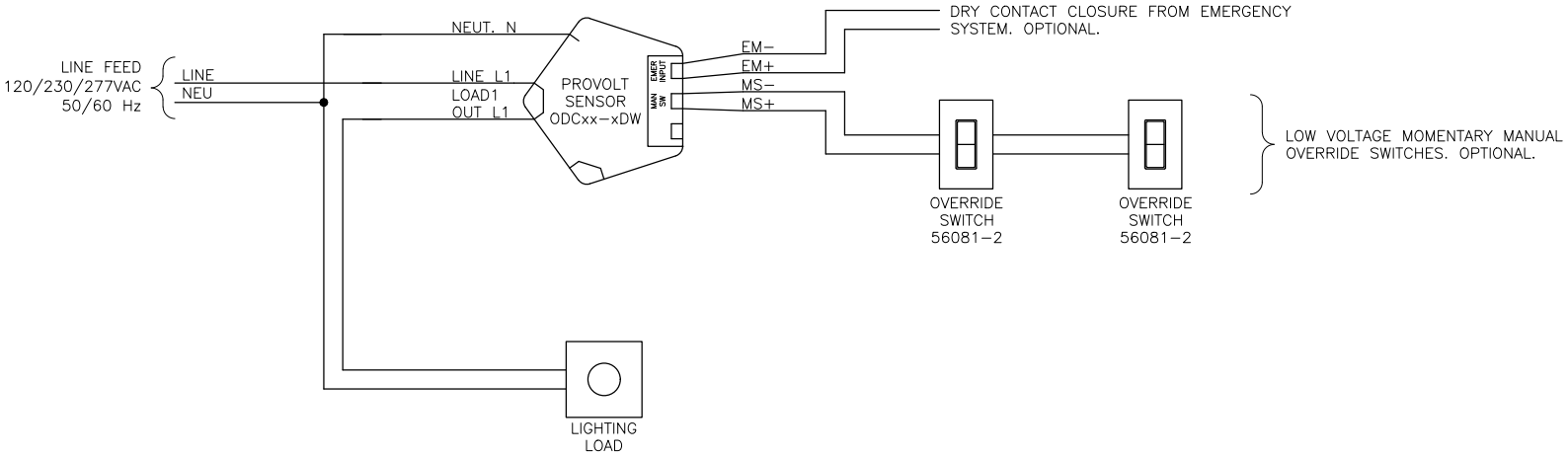

PROVOLT ODC SENSOR WITH POWER PACK FOR LOW VOLTAGE HVAC DRY CONTACT CLOSURE

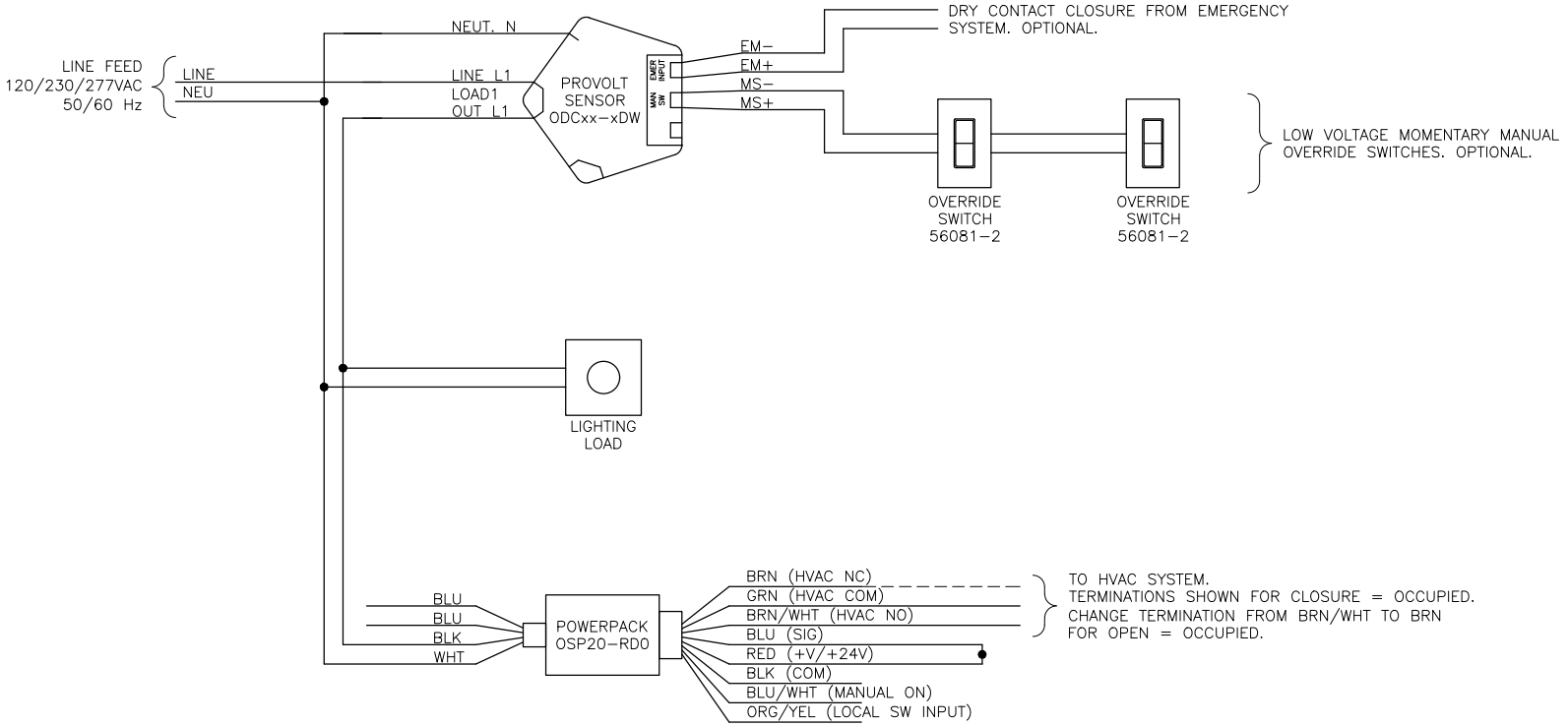

DESCRIPTION

1. THE POWER PACK CONTAINS A POWER SUPPLY, LINE LEVEL LOAD SWITCHING RELAY (NOT REQUIRED FOR THIS OPERATION) AND A LOW VOLTAGE HVAC ISOLATED RELAY.
2. THE BLACK LINE L1 (120-230-277VAC) WILL BE CONNECTED TO THE LINE FEED HOT (BLACK).
3. THE LINE OUT L1 WILL BE CONNECTED TO THE LOAD AND THE POWER PACK HIGH VOLTAGE BLACK.
4. ODC, POWER PACK, AND LOAD NEUTRALS WILL BE TERMINATED TO THE LINE FEED NEUTRAL (WHITE).
5. THE POWER PACK LOW VOLTAGE RED (24VDC) WILL BE TERMINATED TO THE POWER PACK BLUE (SIG).
6. THE HVAC SYSTEM WILL TERMINATE + VOLTAGE TO THE POWER PACK LOW VOLTAGE RELAY COMMON (GREEN). THE SECOND HVAC LEAD WILL TERMINATE TO EITHER THE NC (BROWN) OR NO (BROWN/WHITE) DEPENDING IF IT NEEDS TO SEE OPEN OR CLOSED CONTACT FOR OCCUPANCY, RESPECTIVELY.
7. INDIVIDUALLY CAP OFF UNUSED LEADS.
8. GROUND NOT SHOWN FOR CLARITY. GROUND AS REQUIRED BY NATIONAL AND LOCAL CODES AND BEST PRACTICES.

OPERATIONAL NOTES:

1. WHEN THE ODC ENERGIZES ITS ATTACHED LOAD, IT WILL ALSO ENERGIZE THE ATTACHED POWER PACK, CHANGING THE STATE OF THE HVAC RELAY FROM THE NORMAL POSITION.
2. WHEN THE ODC DE-ENERGIZES ITS ATTACHED LOAD, THE POWER PACK WILL ALSO BE DE-ENERGIZED, RETURNING THE HVAC RELAY TO THE NORMAL STATE.
3. HVAC RELAY MAY NOT FOLLOW ROOM OCCUPANCY UNDER TWO CONDITIONS:
   A. WHEN THE ODC IS SET TO OPERATE IN MANUAL ON MODE AND THE LOAD ISN'T ENERGIZED MANUALLY WITH OCCUPANCY;
   B. WHEN THE LOAD IS MANUALLY TURNED OFF WHILE THE ROOM IS STILL OCCUPIED.

PROVOLT PHOTOCELL WITH OPTIONAL OVERRIDE SWITCH

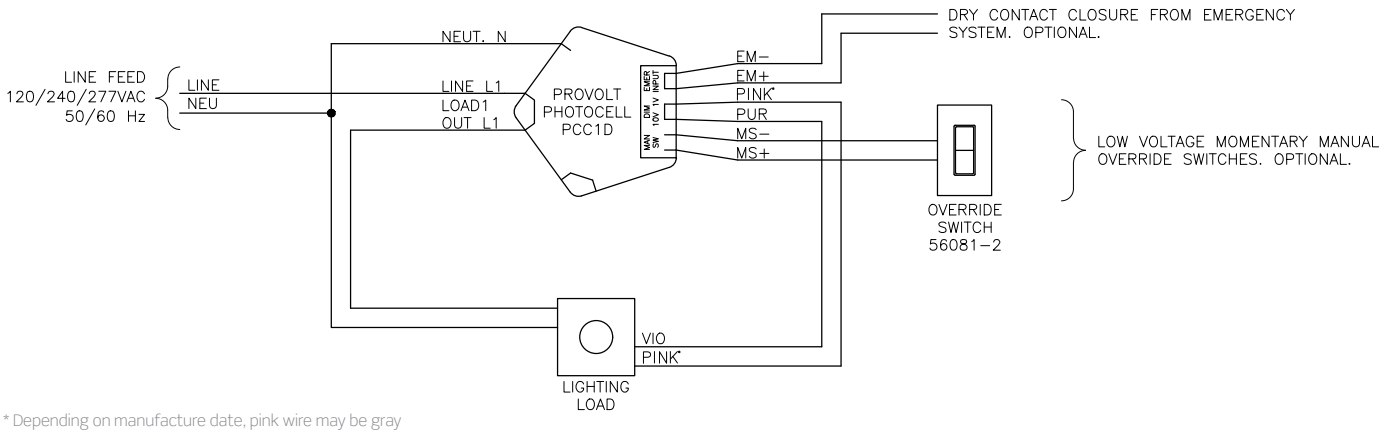

* Depending on manufacture date, pink wire may be gray

PROVOLT PHOTOCELL WITH WALLBOX SENSOR

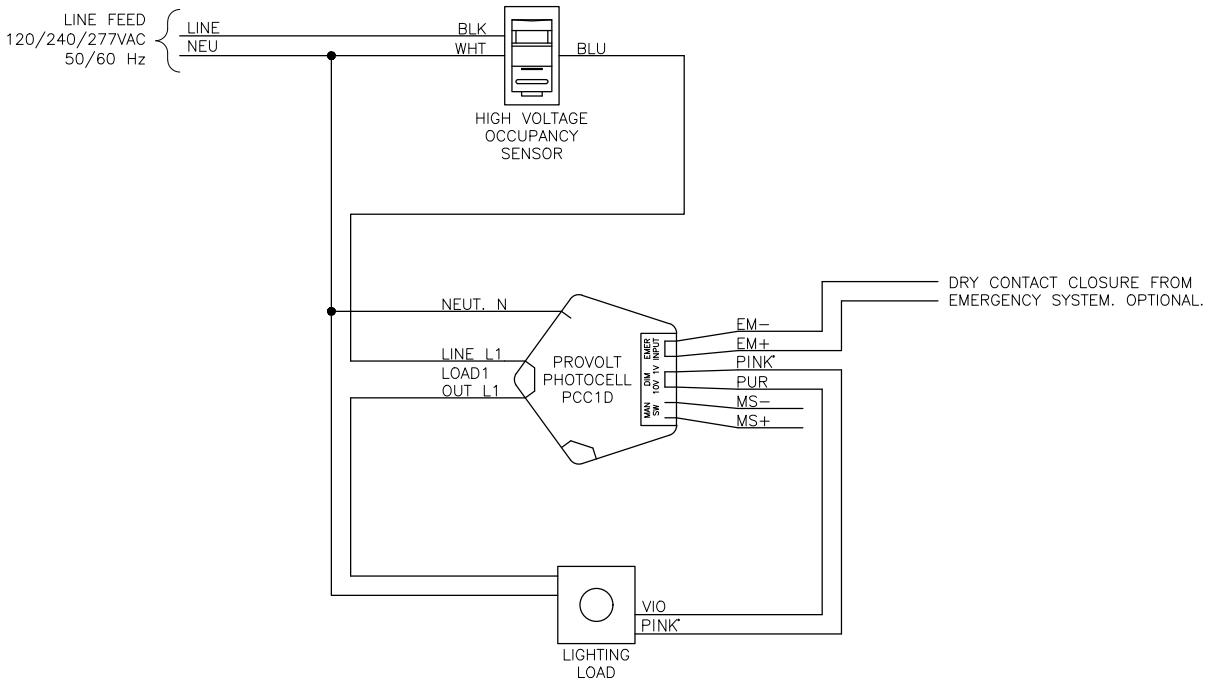

* Depending on manufacture date, pink wire may be gray

OPERATIONAL NOTES:

1. CONNECTING MULTIPLE LINE VOLTAGE SENSORS IN SERIES LIMITS THE OPERATION OF EACH SENSOR:

   ALL SENSORS NEED TO BE IN A STATE WHERE THEY ARE ENERGIZING THE CIRCUIT FOR THE CIRCUIT TO ENERGIZE;

   MANUALLY SWITCHING THE CIRCUIT OFF/ON IS ONLY POSSIBLE WHILE THE OTHER SENSORS ARE ENERGIZING THE CIRCUIT. THIS ALSO APPLIES TO THE EMERGENCY INPUT ON THE PROVOLT SENSOR.

2. RECONFIGURING MULTIPLE LINE VOLTAGE SENSORS TO PARALLEL (NOT SHOWN) LIMITS THE OPERATION OF EACH SENSOR:

PROVOLT PHOTOCELL WITH OPTIONAL OVERRIDE SWITCH

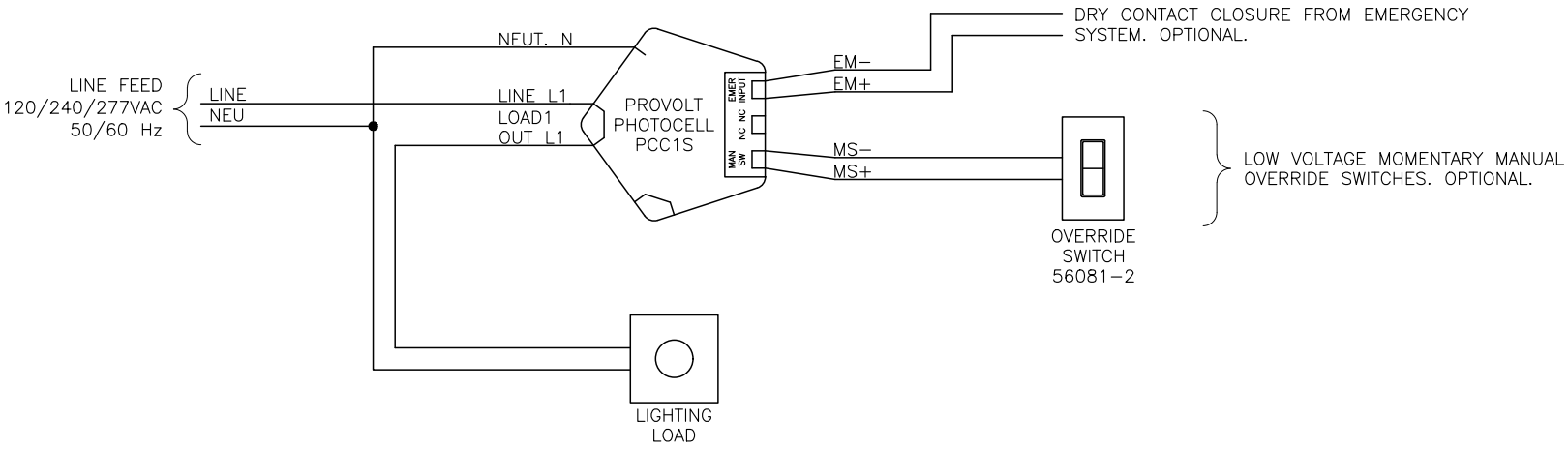

PROVOLT PHOTOCELL SINGLE ZONE, TWO SENSORS

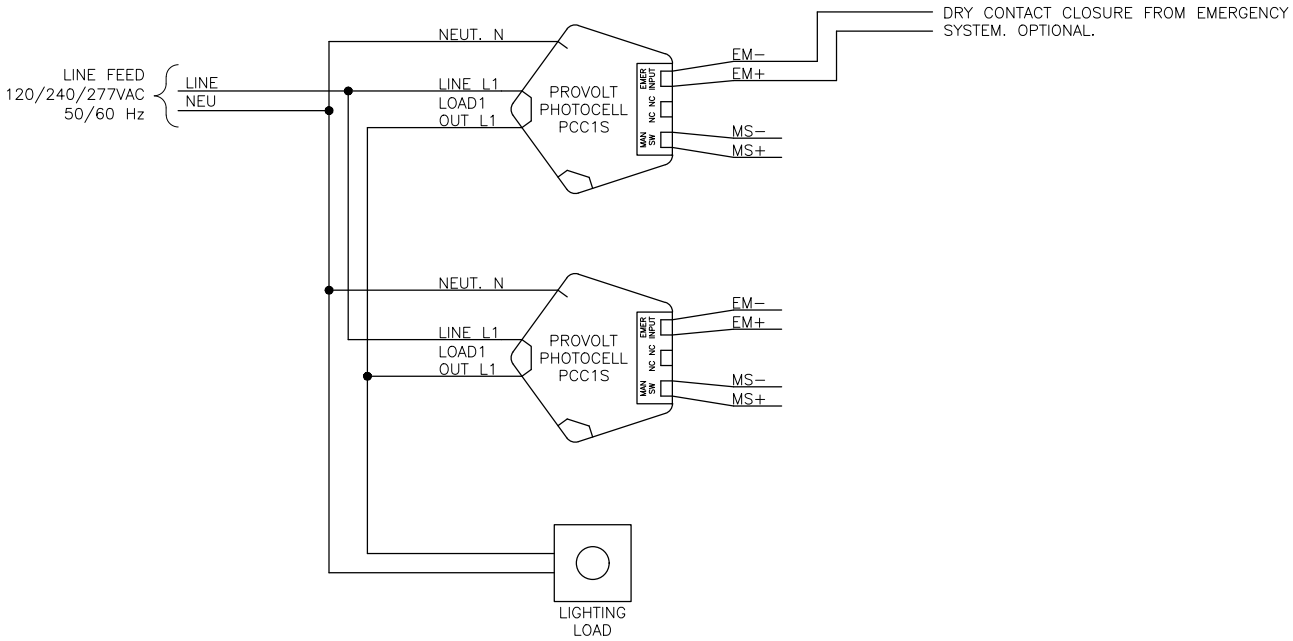

OPERATIONAL NOTES:

1. MULTIPLE LINE VOLTAGE SENSORS TO PARALLEL LIMITS THE OPERATION OF EACH SENSOR:
   - ALL SENSORS NEED TO BE IN A STATE WHERE THEY HAVE THE CIRCUIT DE−ENERGIZED FOR THE CIRCUIT TO DE−ENERGIZE;
   - MANUALLY SWITCHING THE CIRCUIT ON/OFF IS ONLY POSSIBLE WHILE THE OTHER SENSORS ARE NOT ENERGIZING THE CIRCUIT. THIS ALSO APPLIES TO THE EMERGENCY INPUT ON THE PROVOLT SENSOR.
2. RECONFIGURING CONNECTING MULTIPLE LINE VOLTAGE SENSORS IN SERIES (NOT SHOWN) LIMITS THE OPERATION OF EACH SENSOR:
   - ALL SENSORS NEED TO BE IN A STATE WHERE THEY ARE ENERGIZING THE CIRCUIT FOR THE CIRCUIT TO ENERGIZE;
   - MANUALLY SWITCHING THE CIRCUIT OFF/ON IS ONLY POSSIBLE WHILE THE OTHER SENSORS ARE ENERGIZING THE CIRCUIT. THIS ALSO APPLIES TO THE EMERGENCY INPUT ON THE PROVOLT SENSOR.
3. LEVITON RECOMMENDS USING LOW VOLTAGE SENSORS, LOW VOLTAGE SWITCH, AND A SINGLE POWER PACK WHEN MANUAL SWITCHING IS REQUIRED.

PROVOLT PHOTOCELL, TWO ZONE, TWO SENSORS WITH OPTIONAL OVERRIDE SWITCH

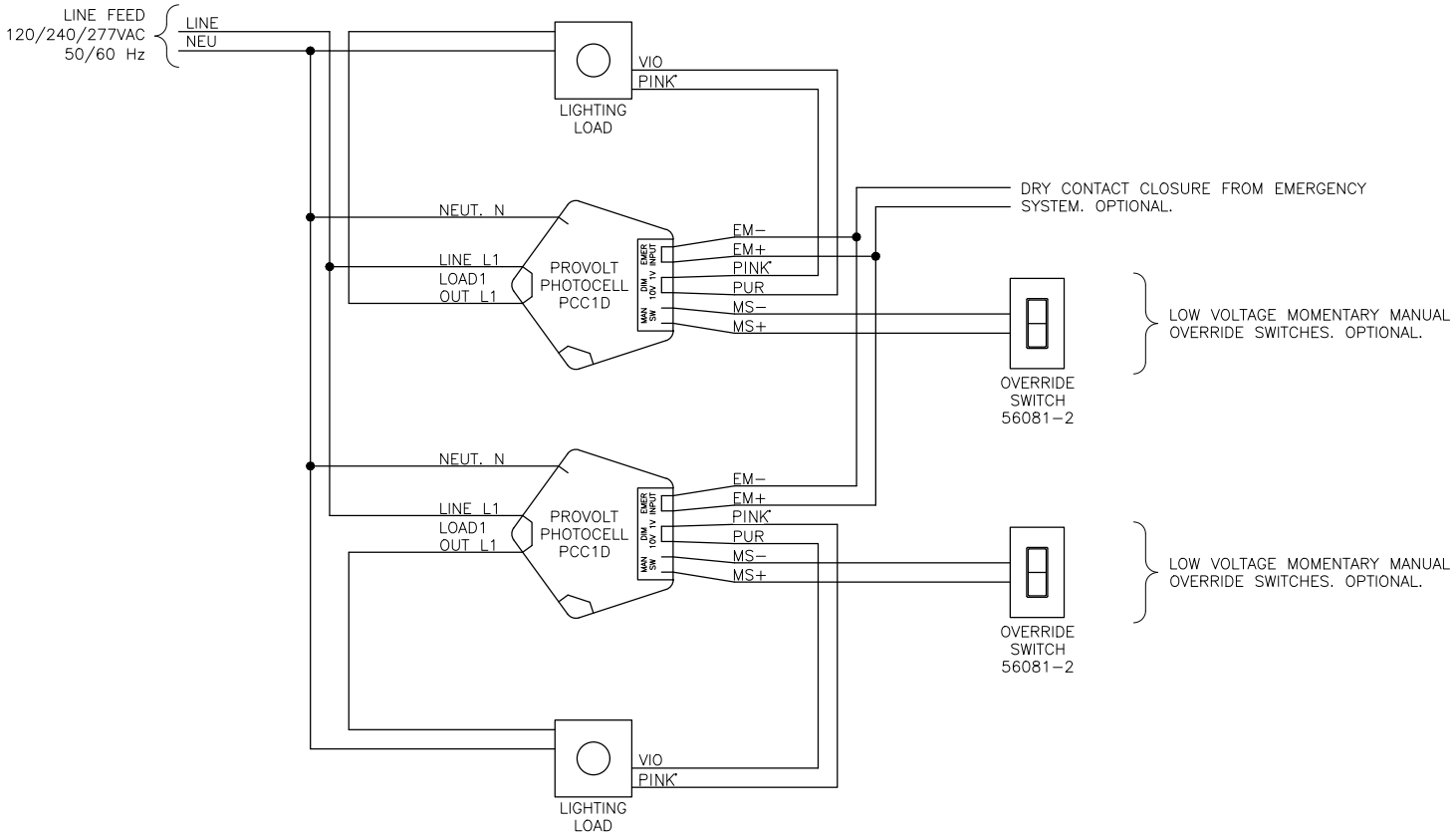

* Depending on manufacture date, pink wire may be gray

RESTROOM WITH FAN CONTROL

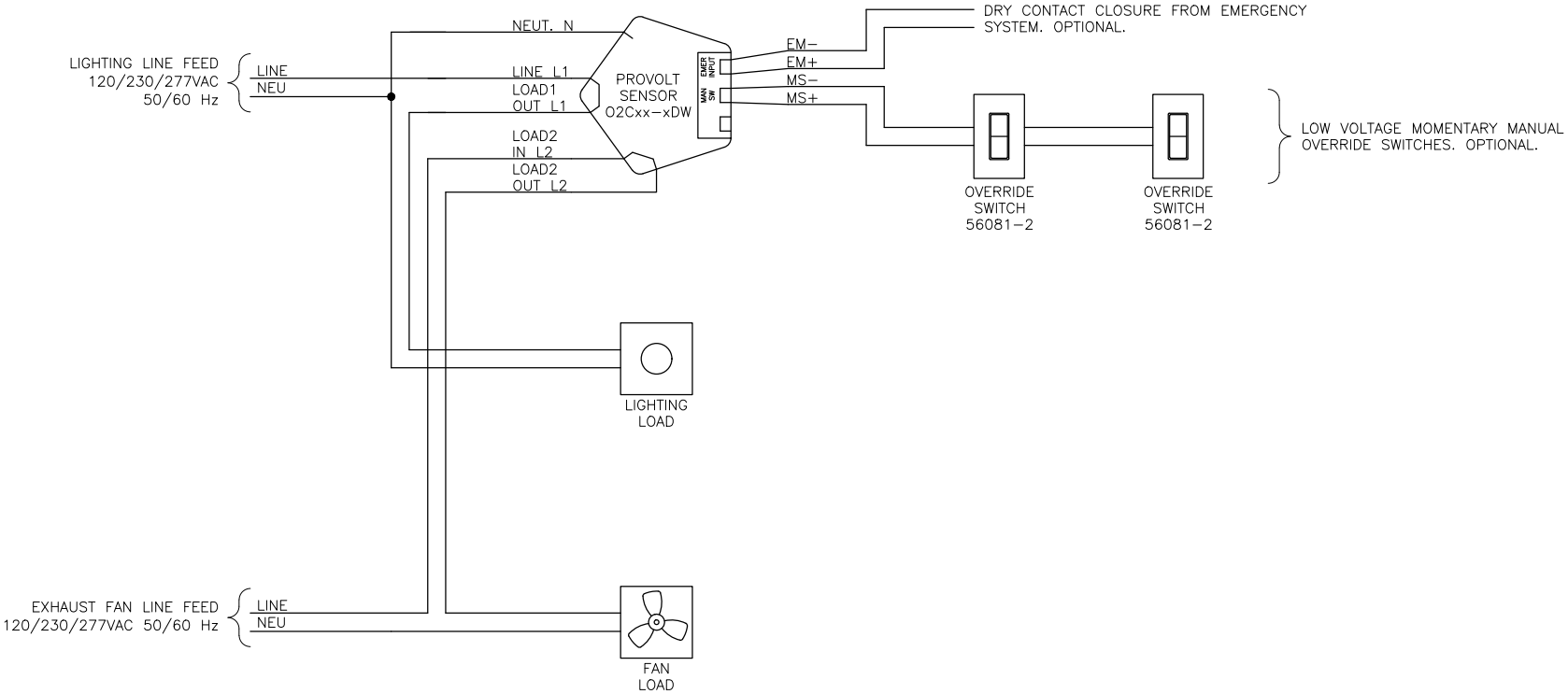

OPERATIONAL NOTES:

1. CONFIGURE SENSOR AS APPROPRIATE TO JOB REQUIREMENTS:
   - LOAD 2: 10 MINUTE DELAY OFF.

SMALL OFFICE, SINGLE ZONE

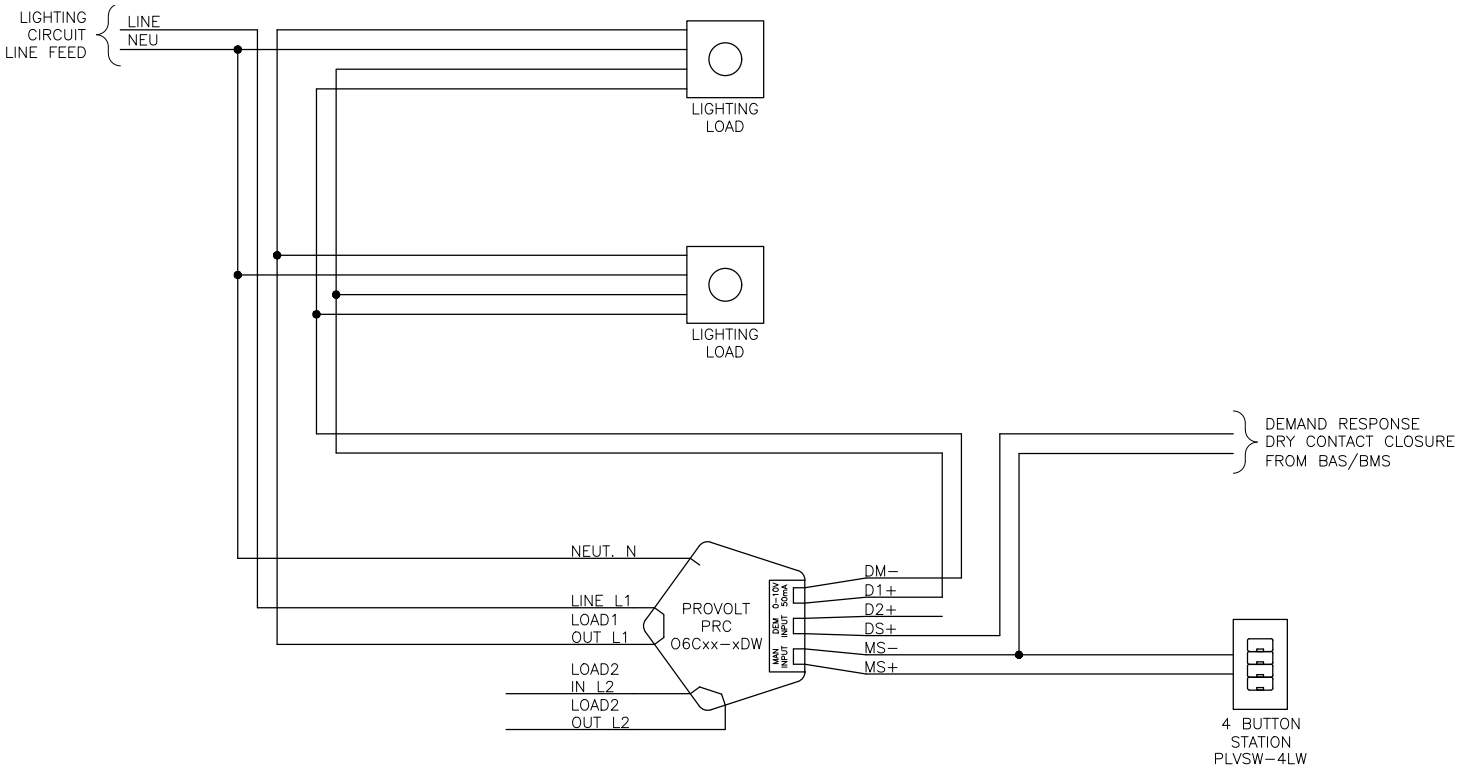

SMALL OFFICE, TWO ZONE

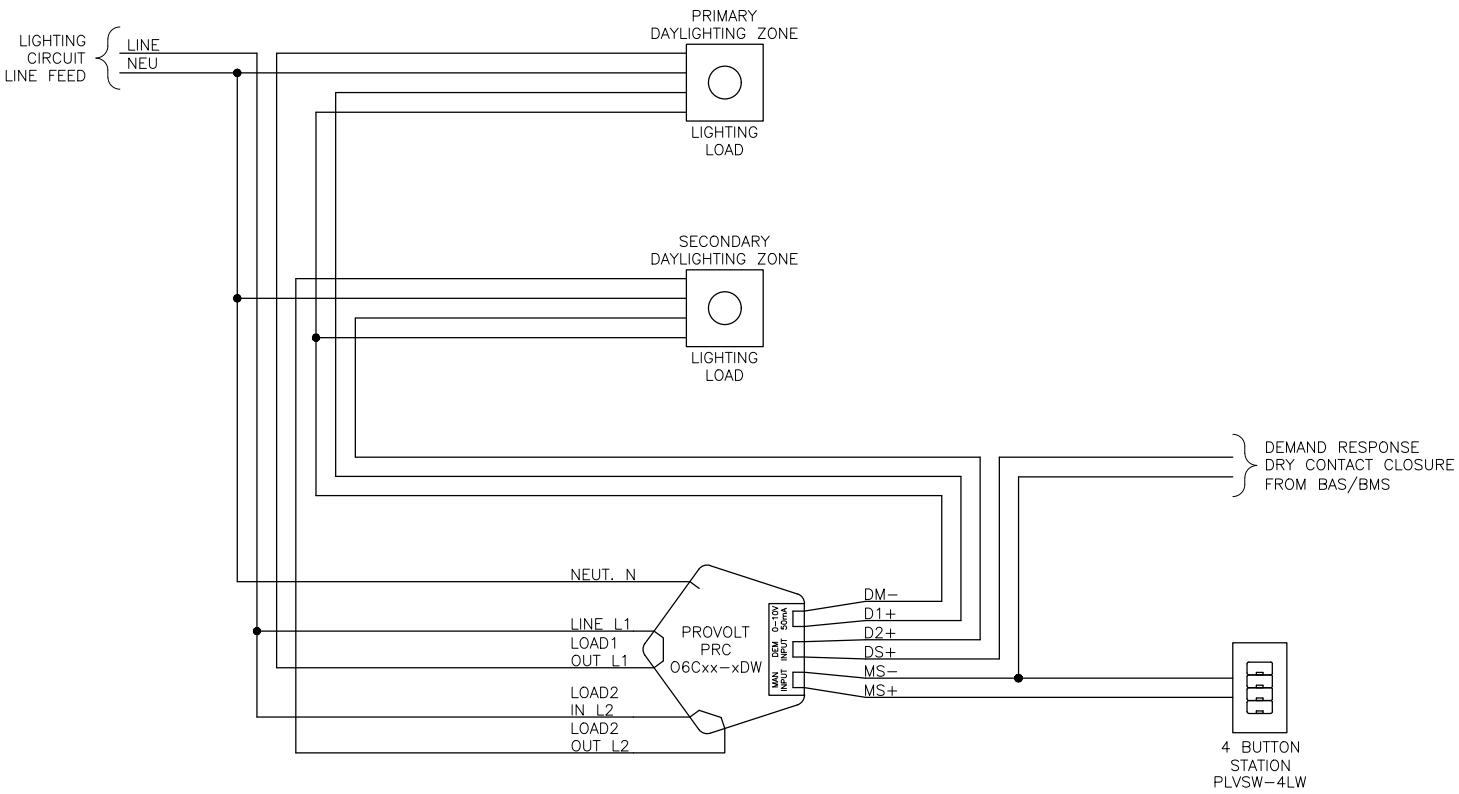

STAIRWELL BI-LEVEL CONTROL

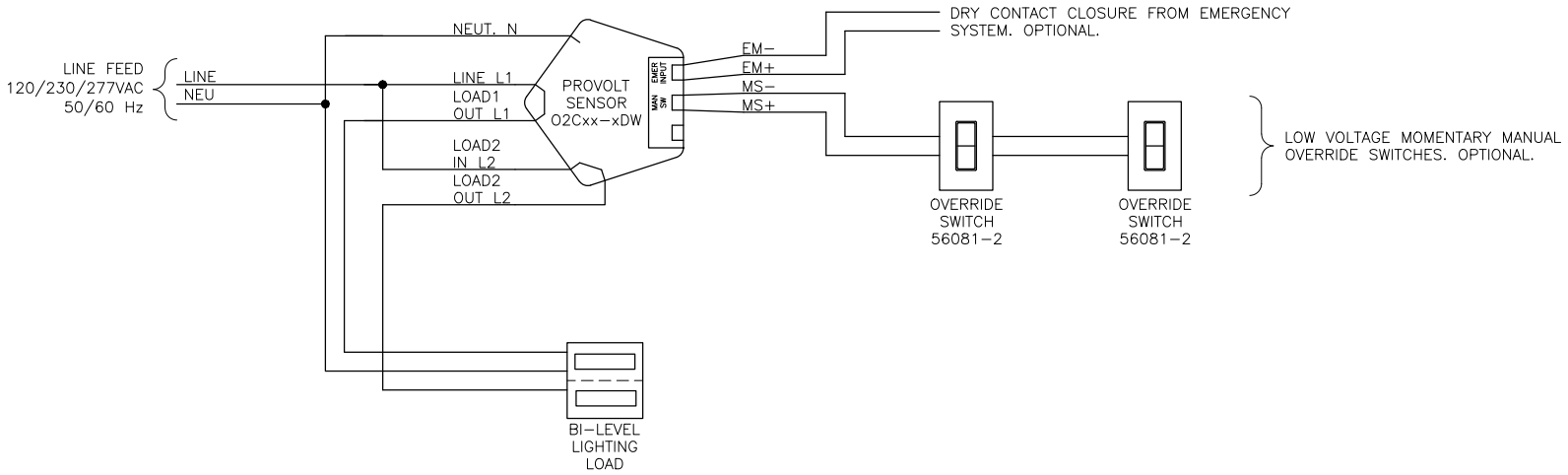

OPERATIONAL NOTES:

1. CONFIGURE AS APPROPRIATE TO JOB REQUIREMENTS:
   - STEP DIMMING (BI–LEVEL) ALTERNATING WHICH IS ENERGIZED PRIMARY;
   - STEP DIMMING, (BI–LEVEL) FIXED PRIMARY;
   - ALTERNATE ENERGIZED LIGHTING LOAD.
2. CONFIGURATION SHOWN FOR SINGLE SENSED LANDING AREA. ADD SENSORS IN PARALLEL TO ADD LANDINGS TO THE SAME CONTROLLED ZONE.

STAIRWELL LANDING, SINGLE ZONE

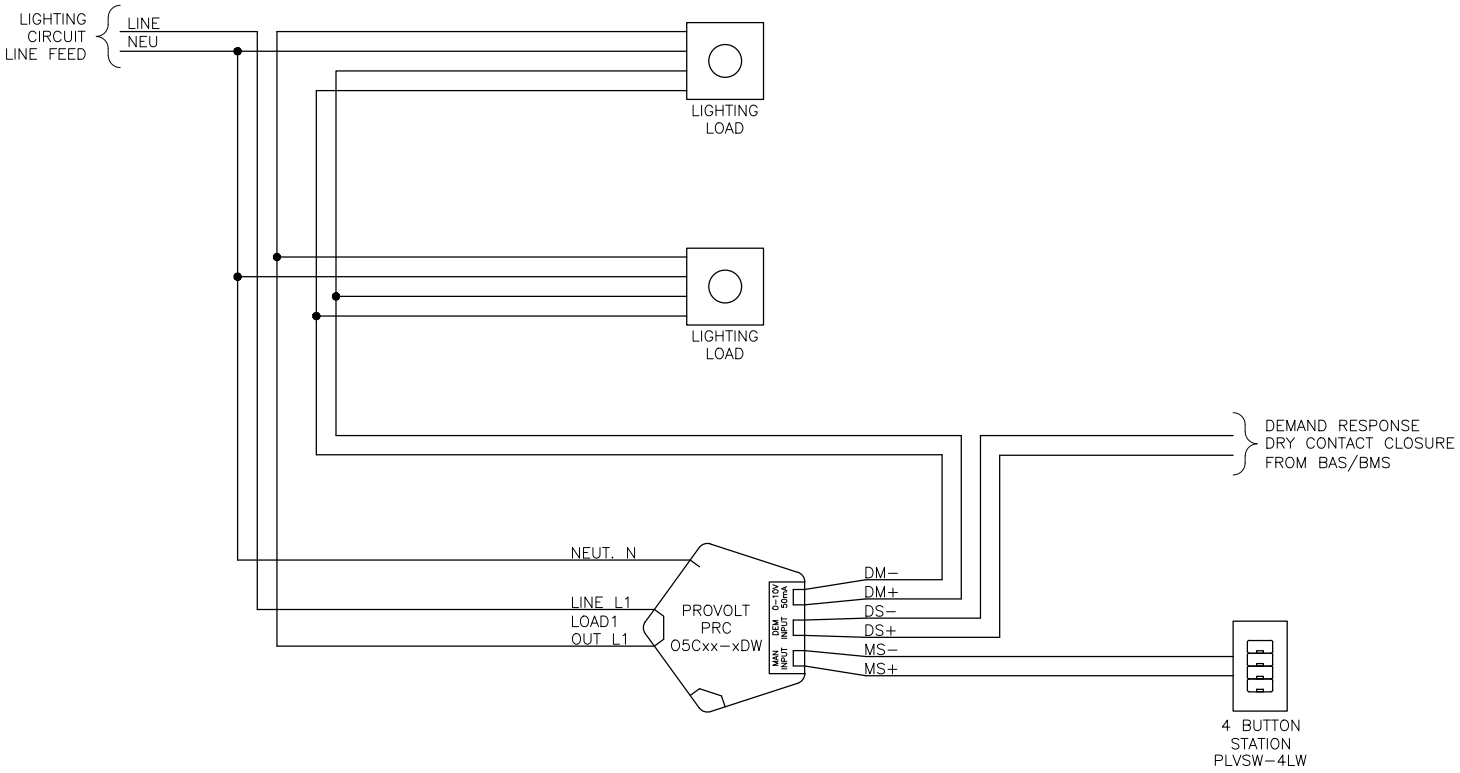

STAIRWELL LANDING, TWO ZONE

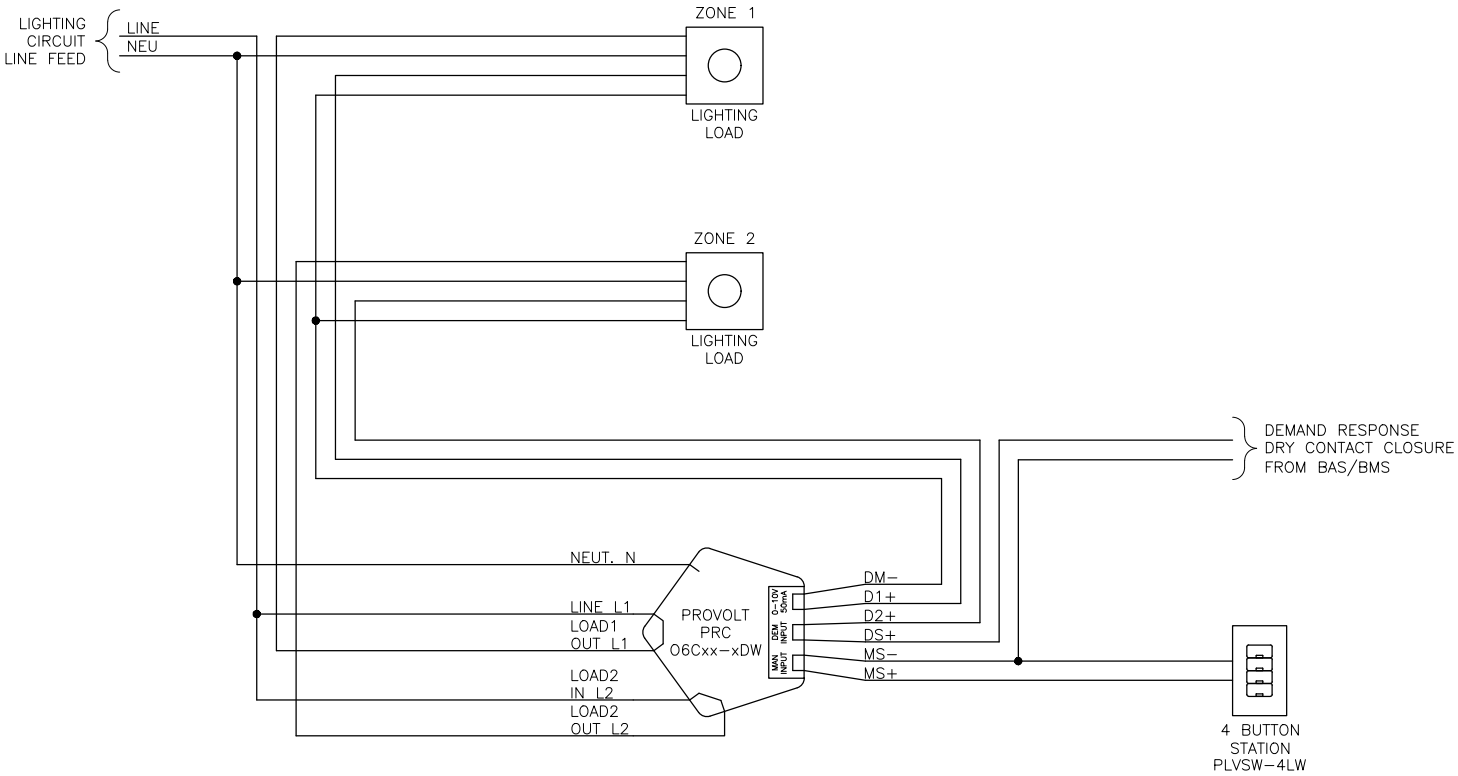

UL924 BYPASS DAYLIGHT HARVESTING, PROVOLT DIMMING, 2 ZONES

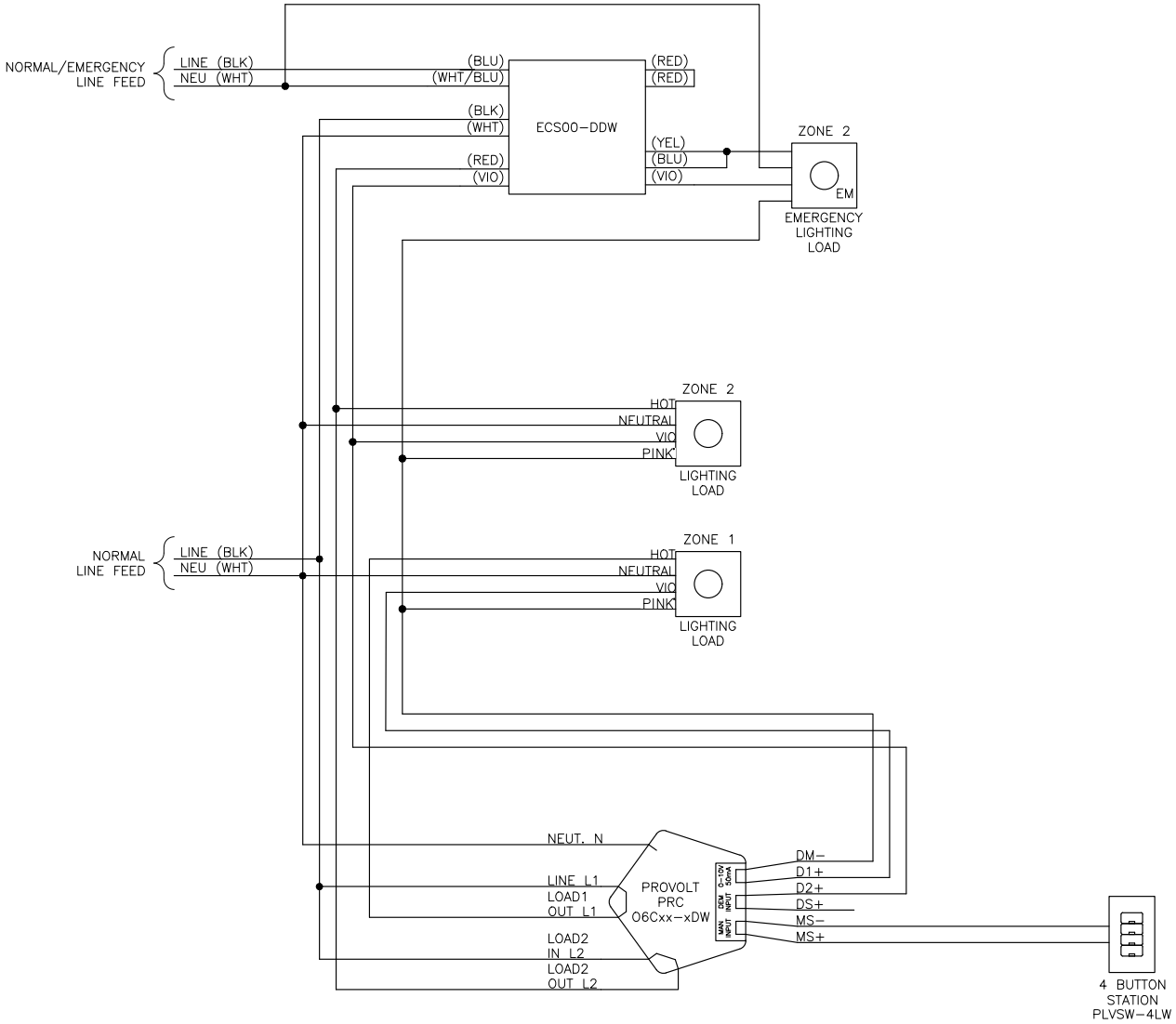

* Depending on manufacture date, pink wire may be gray

NOTES:

1. TERMINATIONS NOT PARTICIPATING IN THIS SCHEME NOT SHOWN FOR CLARITY.

UL924 BYPASS 0-10V, 4-WIRE PROVOLT DIMMED LOAD

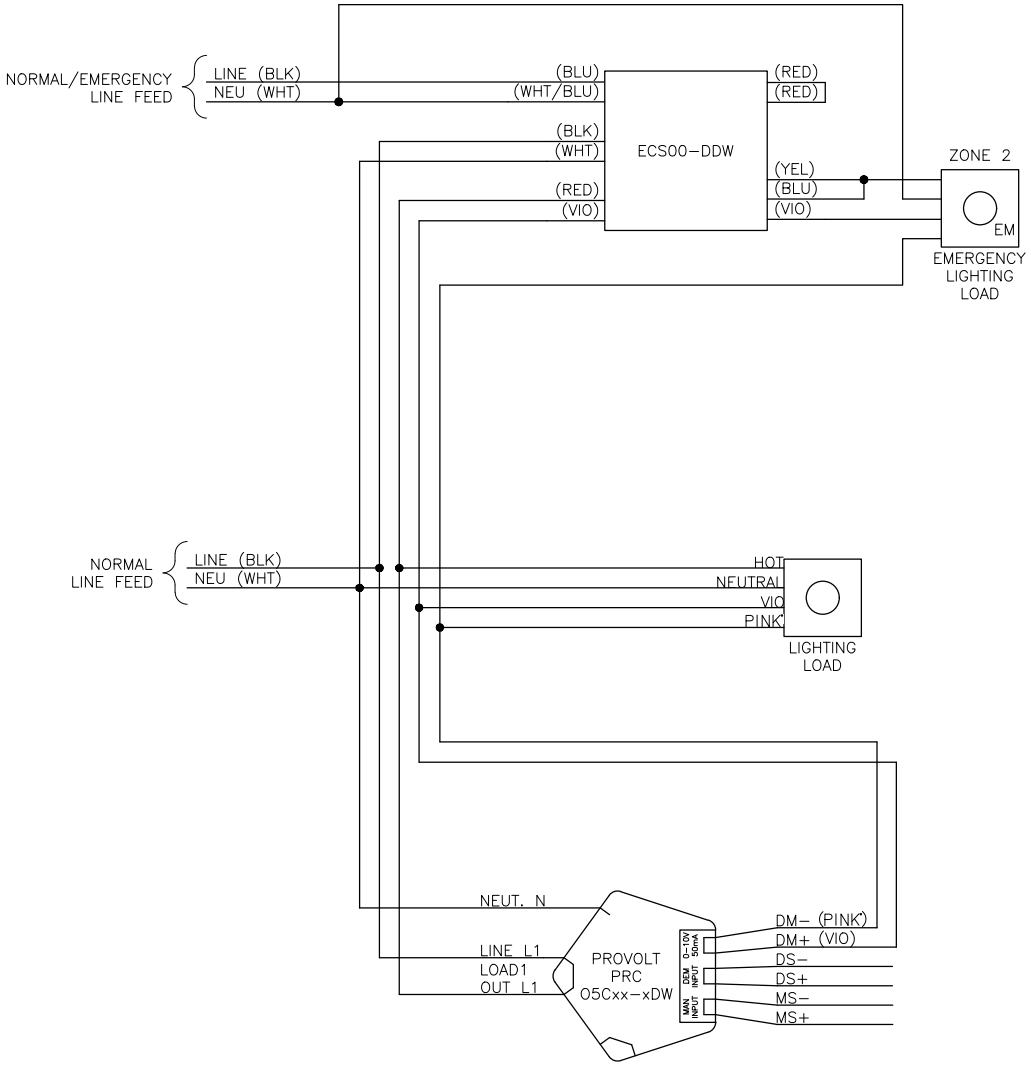

* Depending on manufacture date, pink wire may be gray

NOTES:

1. TERMINATIONS NOT PARTICIPATING IN THIS SCHEME NOT SHOWN FOR CLARITY.

UL924 BYPASS PROVOLT AUTO ON/OFF, MANUAL ON/OFF

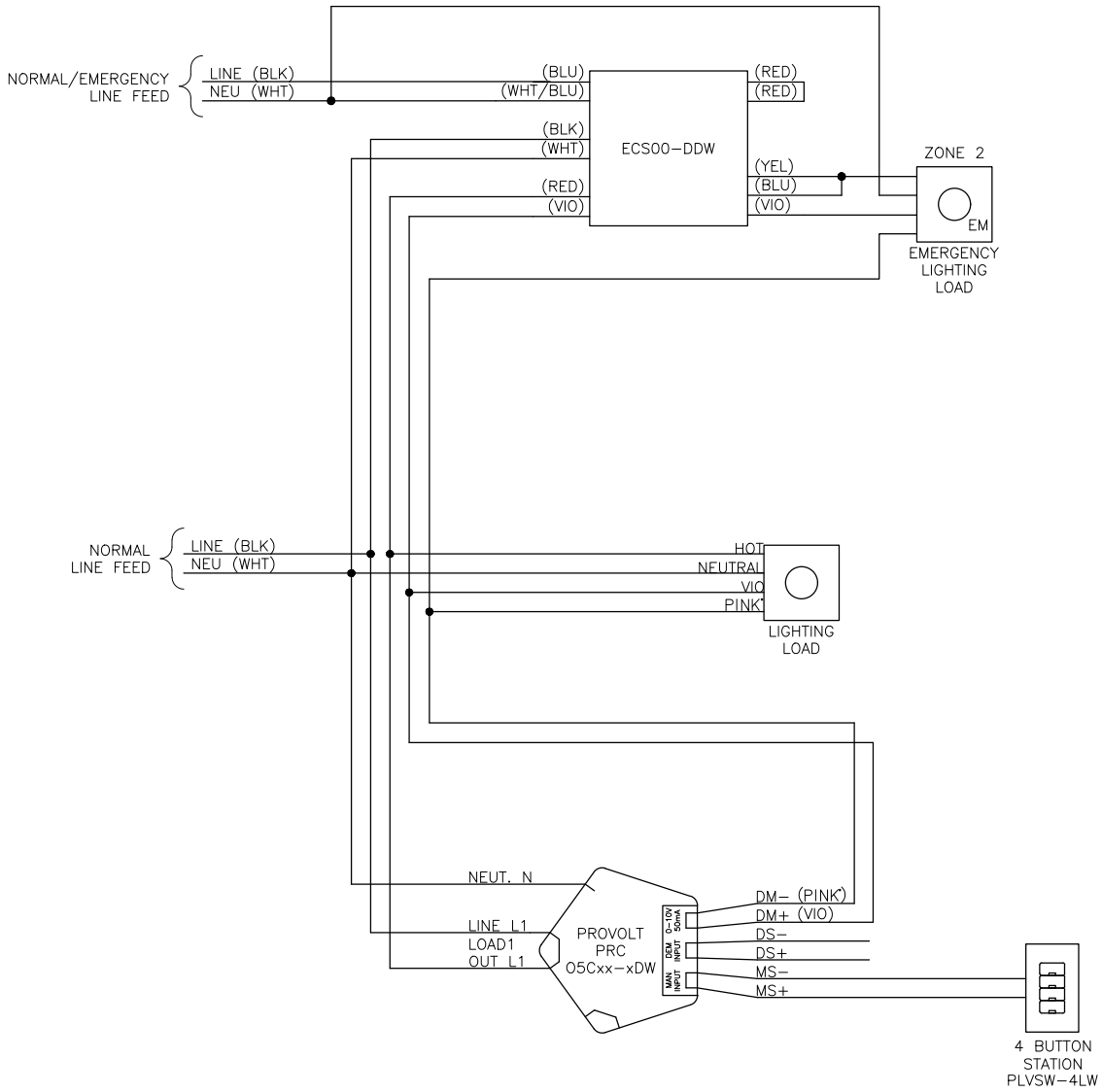

* Depending on manufacture date, pink wire may be gray

NOTES:

1. TERMINATIONS NOT PARTICIPATING IN THIS SCHEME NOT SHOWN FOR CLARITY.

Leviton Manufacturing Co., Inc. Lighting & Controls
20497 SW Teton Avenue, Tualatin, OR 97062 **tel** 800-736-6682 **tech line** (6:00AM-4:00PM PT Mon-Fri) 800-959-6004

Leviton Manufacturing Co., Inc. Global Headquarters
201 North Service Road, Melville, NY 11747-3138 **tel** 800-323-8920 **tech line** (8:00AM-10:00PM ET Mon-Fri, 9:00AM-7:00PM ET Sat, 9:00AM-5:00PM ET Sun) 800-824-3005

Visit our Website at: www.leviton.com/provolt
©2022 Leviton Manufacturing Co., Inc. All rights reserved. Subject to change without notice.

G-9772H/J22-mm
REV OCT 2022