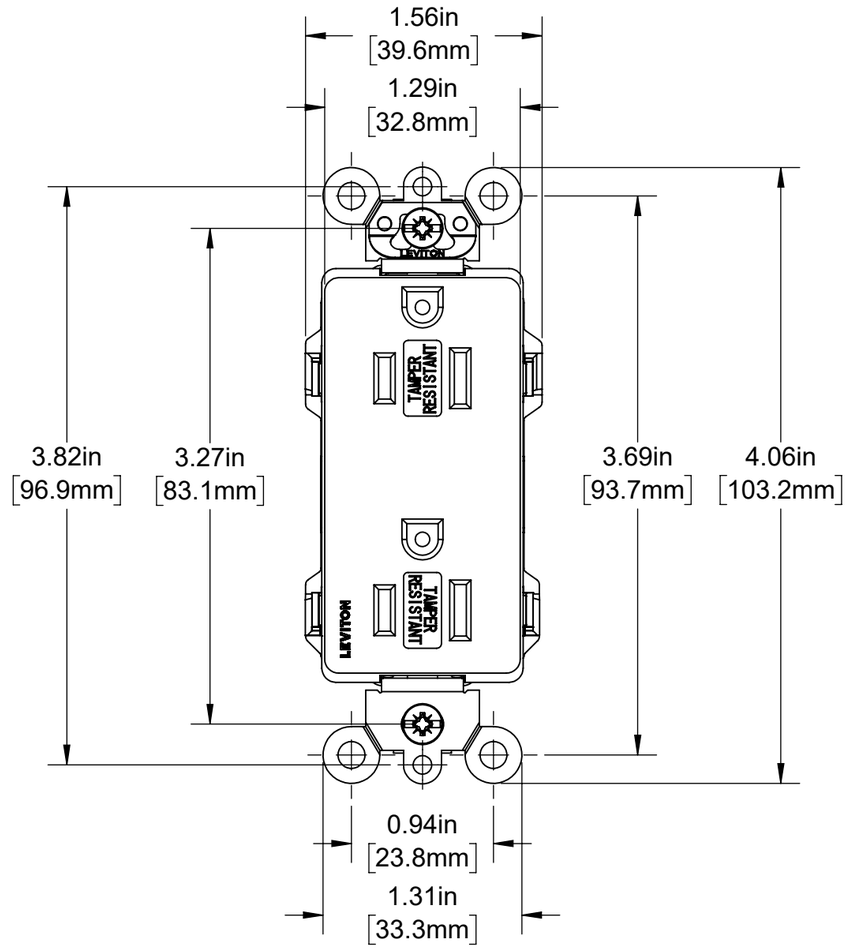

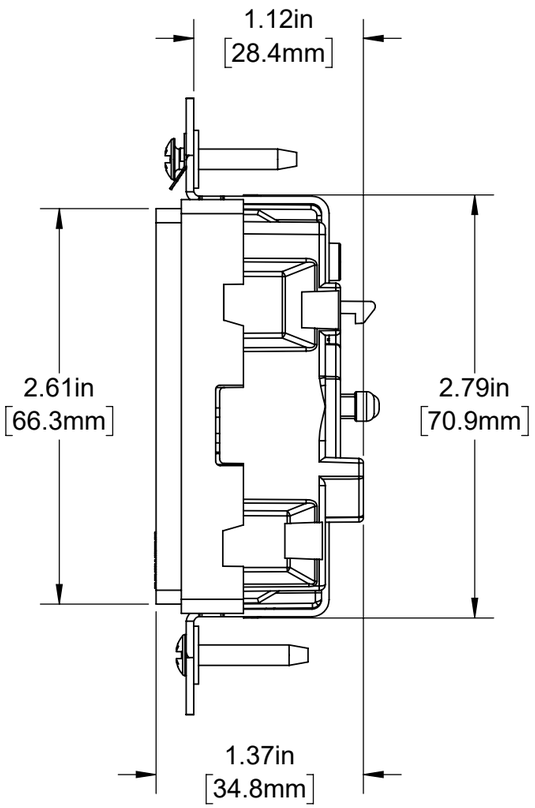

CATALOG # MT162-1C

LEV-LOK DECORA PLUS
DUPLEX RECEPTACLE, SPLIT CIRCUIT,
2 POLE, 3 WIRE, 15AMP, 125 VOLT
SELF-GROUNDING, SPEC GRADE,
NEMA 5-15R, TAMPER RESISTANT

UNLESS OTHERWISE SPECIFIED:
DO NOT SCALE DRAWING.
ALL DIMENSIONS ARE IN INCHES.
ALL ANGLES ARE IN DEGREES.

TOLERANCES

INCH	METRIC
.XX ± .01	.X ± .2 mm
.XXX ± .005	.XX ± .1 mm

ANGLES: ± 1/2°

THIRD ANGLE PROJECTION

ALL PRINTED COPIES ARE UNCONTROLLED

LEVITON®

TITLE:
LEV-LOK DECORA RECEPTACLE
CATALOG DRAWING

DWG NO.
CATSTD-MT162-1CX-D01

SIZE	SCALE:1:1	SHEET 1 OF 1	REV
B			1

Copyright 2020. Unpublished. All Rights Reserved.