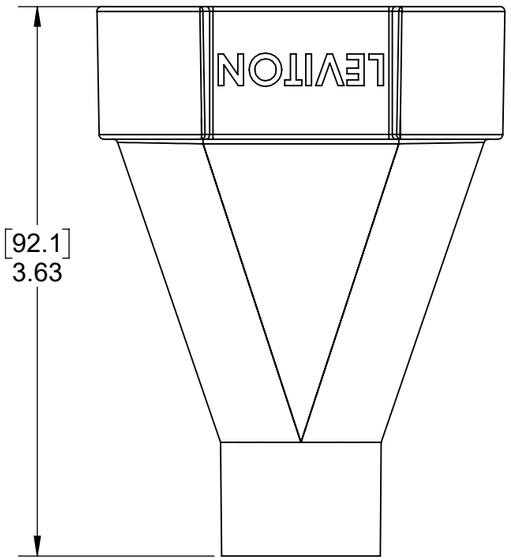

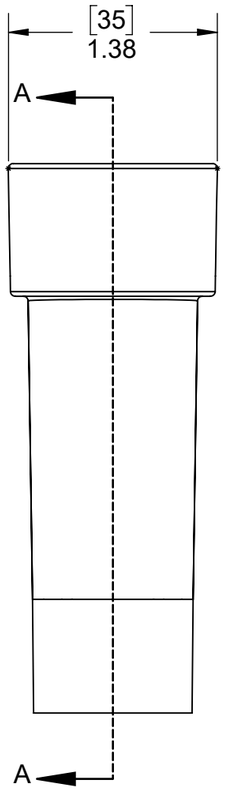

SECTION A

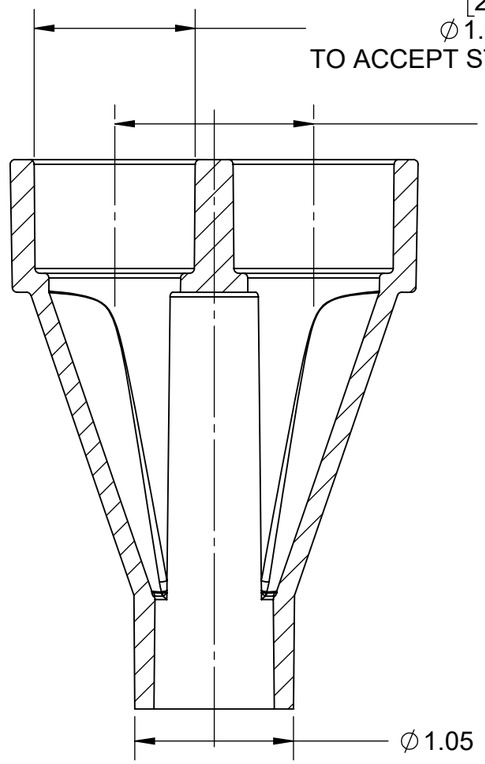

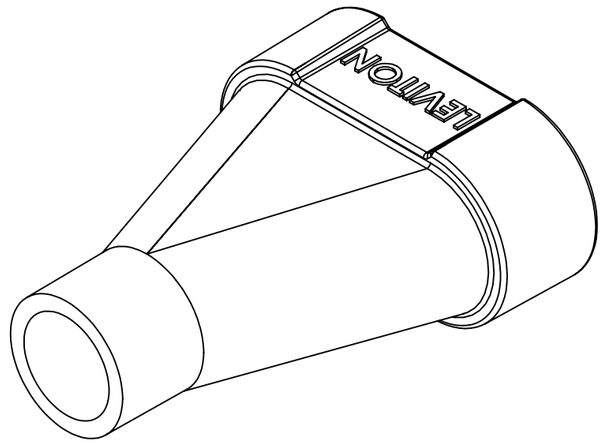

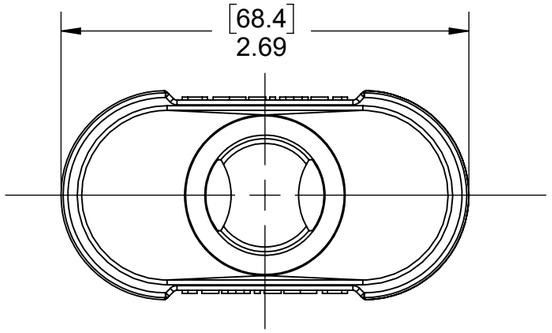

NOTES:

1. ALL DIMENSIONS ARE IN INCHES. DIMENSIONS SHOWN IN SQUARE BRACKET ARE IN MM
2. DIMENSIONS SHOWN ACROSS A CENTERLINE ARE SYMMETRICAL ABOUT THE CENTERINE WITHIN SPECIFIED TOLERANCE.

STATUS: Production Release

REV.	DATE	ECO NUMBER	CHGD	APVD
A	12/16/2019	NEW REVISION	VB	LL
-	-	-	-	-
-	-	-	-	-
-	-	-	-	-
-	-	-	-	-

LEVITON®

The information in this document is the exclusive **PROPRIETARY** property of **LEVITON MFG. CO., INC.** It is disclosed with the understanding that acceptance or review by the recipient constitutes an undertaking by the recipient:
(1) to hold this information in strict confidence.
(2) not to disclose, duplicate, copy, or use the information, in whole or in part, for any purpose other than that for which disclosed.
Copyright 2016. Unpublished. All Rights Reserved.

UNLESS OTHERWISE SPECIFIED:
DO NOT SCALE DRAWING.
ALL DIMENSIONS ARE IN INCHES.
ALL ANGLES ARE IN DEGREES.

TOLERANCES

INCH	METRIC
.XX ± .01	.X ± .2 mm
.XXX ± .005	.XX ± .1 mm

ANGLES: ± 1/2°

THIRD ANGLE PROJECTION

ALL PRINTED COPIES ARE UNCONTROLLED

TITLE:

Y-ADAPTER
CONCRETE FLOOR BOX FBBOX

DWN BY	VB	12/09/2019	ENGRG	LL	12/16/2019
CHK BY	LL	12/16/2019	MFG	LL	12/16/2019

DWG NO.
CATXXX-FBYAD-XXX-D01

SIZE	PROJECT NO. PROJ-03152		REV
B	SCALE:1:1	SHEET 1 OF 1	A