Applications Cookbook

Emergency Controls

Version 3.0

FOR REFERENCE ONLY

GREENMAX DRC SYSTEM COOKBOOK NOTES

1. Refer to manufacturer's data sheets and installation instructions prior to installation
2. Line feed 120/230/277 VAC, 60 Hz
3. Ground not shown, ground devices per applicable national and local codes are best practices
4. For emergency power situations, illustrations assume transfer switch by others upstream of shown devices
5. Line voltage load not to exceed contact rating per device specifications
6. Power packs receiving separate feeds for switched loads and self power must have both feeds on the same phase
7. All low voltage devices consume current. Device power budget is estimated for these details—additional power sources may be required. See product literature for power specifications
8. Maximum run length for analog wiring is 1000' @ #18 AWC
9. Sensors wired in parallel will cause line voltage relay closure when occupancy is detected by any unit
10. Devices in series requiring contact closure from a single device (clock input, demand response, emergency, etc.) must follow these wiring conventions:
    - First device in sequence provides the +V to the triggering relay
    - Signal from closure attached to all devices in sequence input
    - Com from first device in sequence attached to com on all devices in sequence
11. Ultrasonic ceiling mount sensors should be located a minimum of six (6) feet from HVAC supply/return vents
12. Trough-mounted and pendant-mounted indirect lighting sources affect the operation of locally mounted sensors. Contractor is responsible for adjusting sensor locations to allow for proper operation
13. Contractor is responsible for proper sensitivity and time delay settings for non-adaptive products, following the manufacturer's recommended placement, and field verification of circuits with respect to power pack placement
14. Contractor is responsible for coordinating the operational options of sensors and power packs with the specific work requirements
    - Work relevant energy code requirements affect circuits to be controlled and their control characteristics
    - One power pack is required for each controlled circuit
    - Refer to power pack data sheet for power output and installation guide for maximum number of sensors connected to a power pack
    - If multiple circuits are to be controlled by a sensor, auxiliary relays may be used in conjunction with a power pack
15. Ceiling sensors mounted over doorways should be placed one (1) foot inside the threshold
16. Up to 100 Mark VII style ballasts may be controlled per daylighting zone by IRC
17. All relays shown in de-energized state
18. Individually cap off unused leads
19. One-line parenthesis use:
    - (X) Function
    - [#] Terminal
20. Plug load control—commercial receptacle P/Ns:
    STANDARD DUPLEX:
    Split control (1 outlet) CR015-1Px, CR020-1Px
    Full control (2 outlets) CR015-2Px, CR020-2Px
    DECORA®:
    Split control (1 outlet) 16252-1Px, 16352-1Px
    Full control (2 outlets) 16252-2Px, 16352-2Px

ABBREVIATIONS:

LC	LumaCAN
LV	Low voltage
HV	High voltage switch (maintained)
LVM	Low voltage switch (momentary) Equal to Leviton 1081 (toggle) OR Leviton 56081 (Decora)
LVT	Low voltage switch (maintained) Equal to Leviton 12021-2 (toggle) or Leviton 56021-2 (Decora)
LV2	IRC low voltage switch
UON	Unless otherwise noted
BLK	Black
WHT	White
BLU	Blue
YEL	Yellow
ORG	Orange
VIO	Violet
BRN	Brown

SYMBOLS:

No Connection

Connection

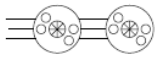
Devices wired in parallel

TABLE OF CONTENTS

PAGE	DESCRIPTION
4	UL924 Bypass, Switched Load
5	UL924 Bypass, Auto-ON/OFF, Manual-ON/OFF
6	UL924 Bypass, Manual-ON/OFF, Auto-OFF, 2-Zone
7	UL924 Bypass, GreenMAX Switched Load
8	UL924 Bypass, miniZ Switched, 2 Zones
9	UL924 Bypass, 0-10V, 4-Wire Dimmed Load
10	UL924 Bypass, Auto-ON/OFF, Manual-ON/OFF
11	UL924 Bypass, GreenMAX 0-10V, 4-Wire Dimmed Load
12	UL924 Bypass, 0-10V, 4-Wire Sector Relay Dimmed Load
13	UL924 Bypass, Provolt, Auto-ON/OFF, Manual-ON/OFF
14	UL924 Bypass Daylight Harvesting, Provolt Dimming, 2 Zones
15	UL924 Bypass Daylight Harvesting, Dimming, 2 Zones
16	UL924 Bypass, PE300 Load Equal to 0-10V Dimming
17	DRC Configuration for UL924 Compliant Operation, Type 1
18	DRC Configuration for UL924 Compliant Operation, Type 2
19	UL1008 Transfer, 2-Wire (Phase) Dimmed Load
20	UL1008 Transfer, PE100
21	UL1008 Transfer, PE200 Lighting Load Equal to Mark X Ballasts
22	UL1008 Transfer, PE400
23	Reverse Phase Dimmed Fixtures with UL1008 Transfer PE500, UL1008 Transfer, IP710-LFZ
24	UL1008 Transfer, 2-Wire (Phase) Dimmed Load
25	UL1008 Transfer, 2-Wire (Phase) Dimmed Load
26	UL1008 Transfer, 2-Wire (Phase) Dimmed Load
27	UL1008 Transfer, 3-Wire Dimmed Load
28	UL1008 Transfer, PE200 Lighting Load Equal to 3-Wire Ballasts
29	UL1008 Transfer, 3-Wire Dimmed Load
30	UL1008 Transfer, 3-Wire Dimmed Load
31	UL1008 Transfer, 0-10V, 4-Wire Dimmed Load
32	UL1008 Transfer, 0-10V, 4-Wire Dimmed Load

UL924 BYPASS, SWITCHED LOAD

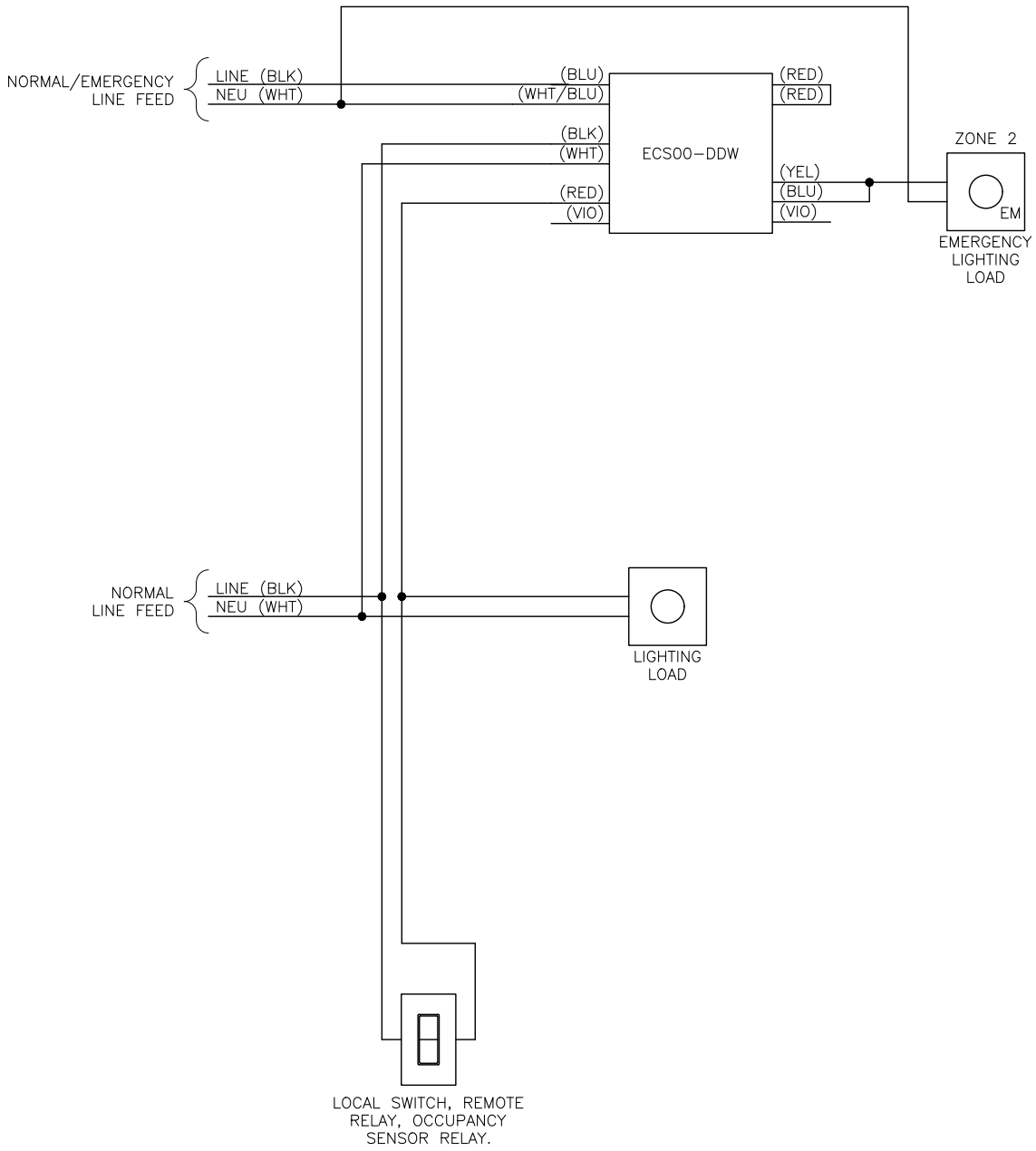

UL924 BYPASS, AUTO-ON/OFF, MANUAL-ON/OFF

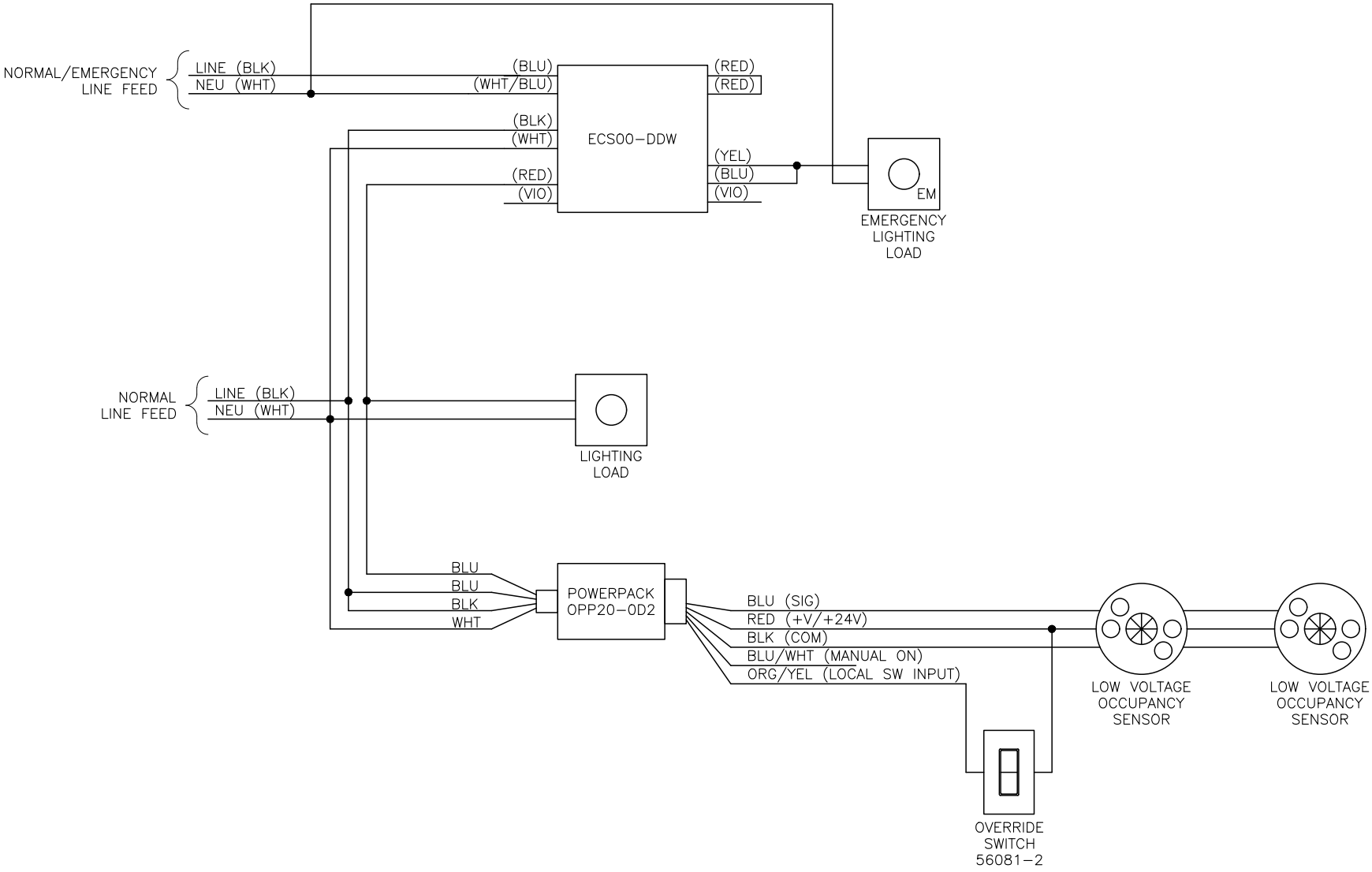

UL924 BYPASS, MANUAL-ON/OFF, AUTO-OFF, 2-ZONE

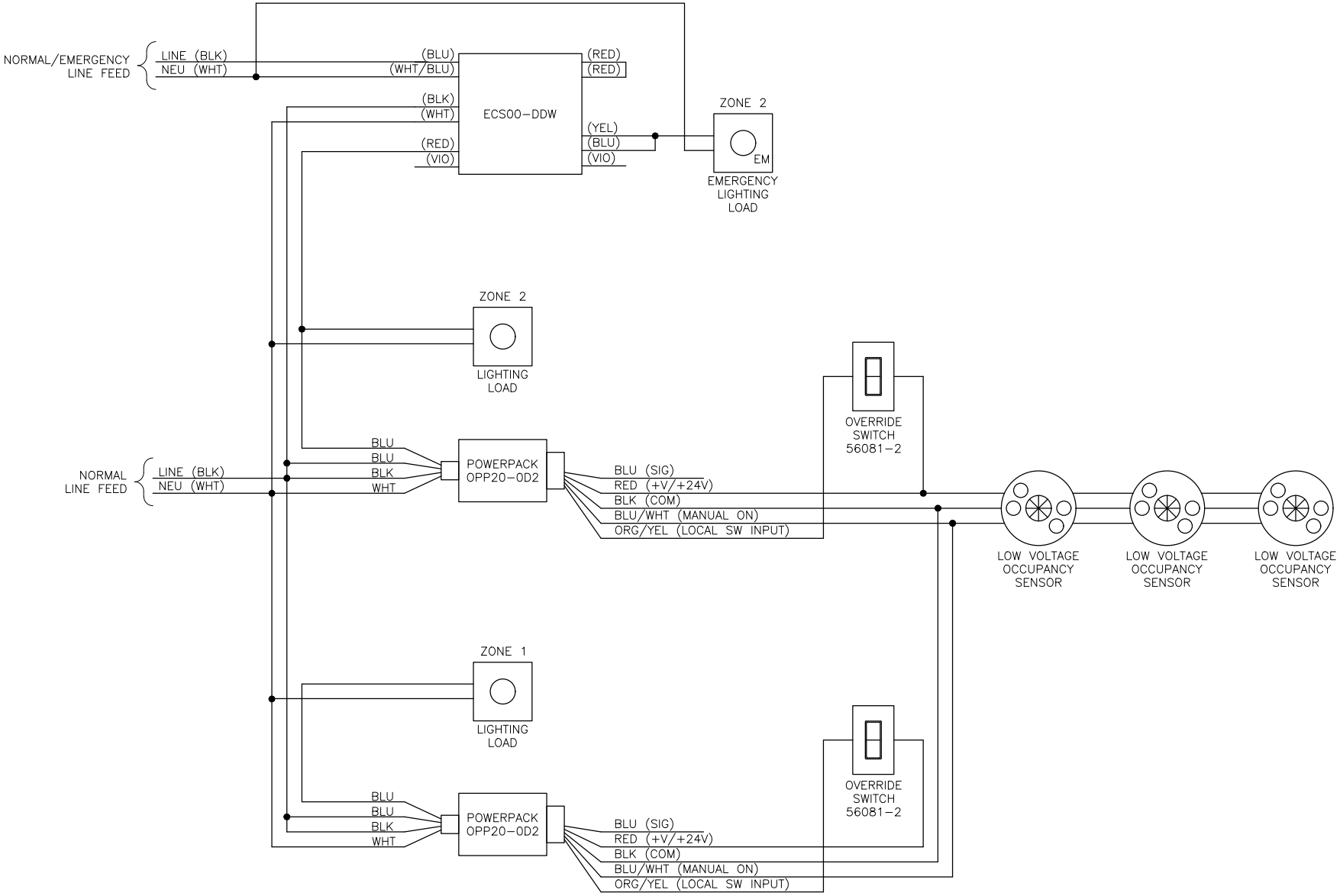

UL924 BYPASS, GREENMAX SWITCHED LOAD

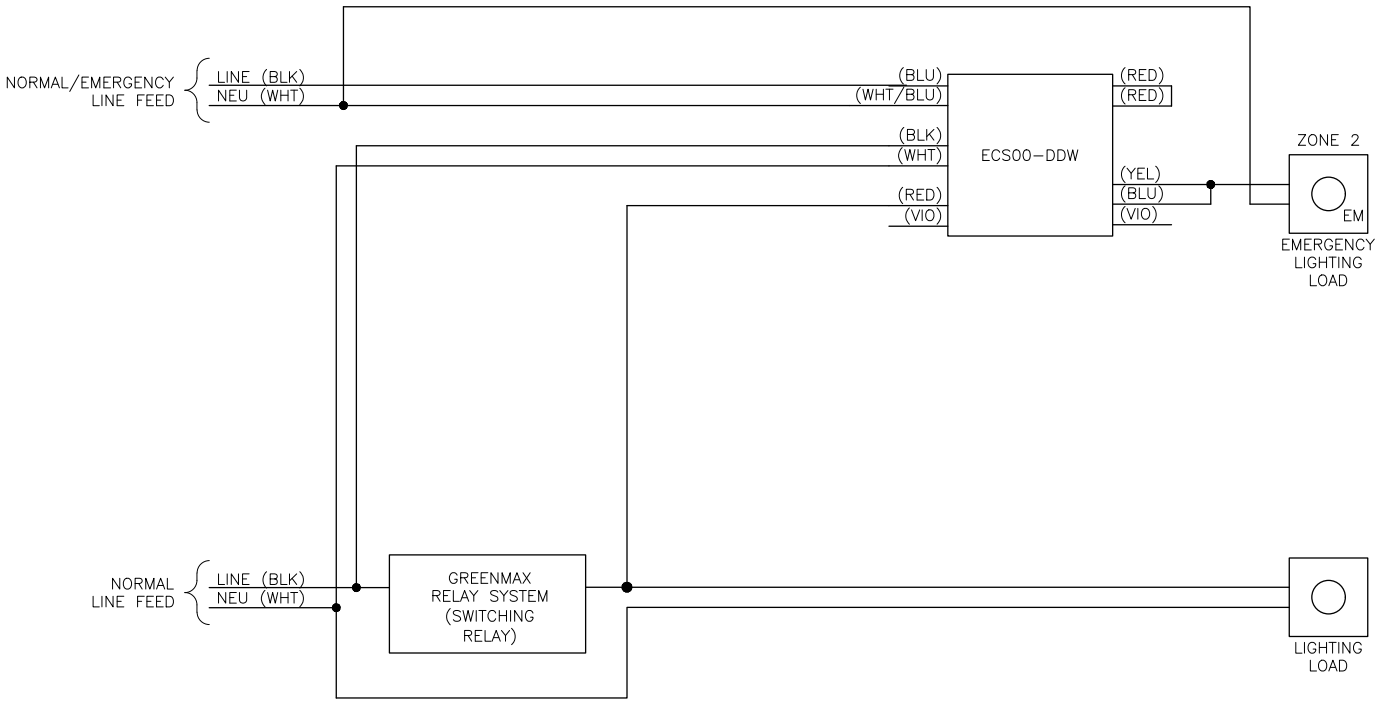

UL924 BYPASS, MINIZ SWITCHED, 2 ZONES

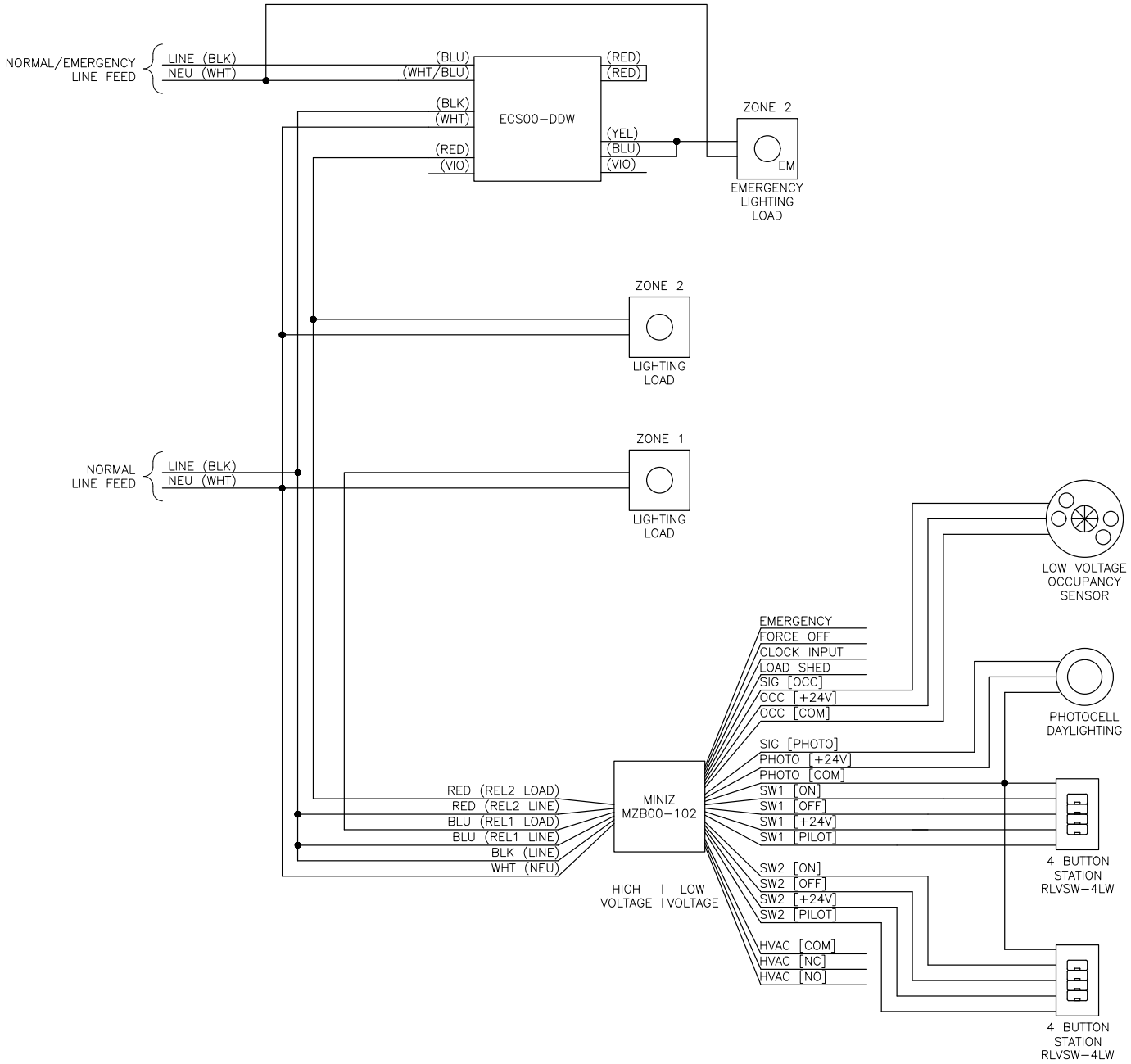

UL924 BYPASS, 0-10V, 4-WIRE DIMMED LOAD

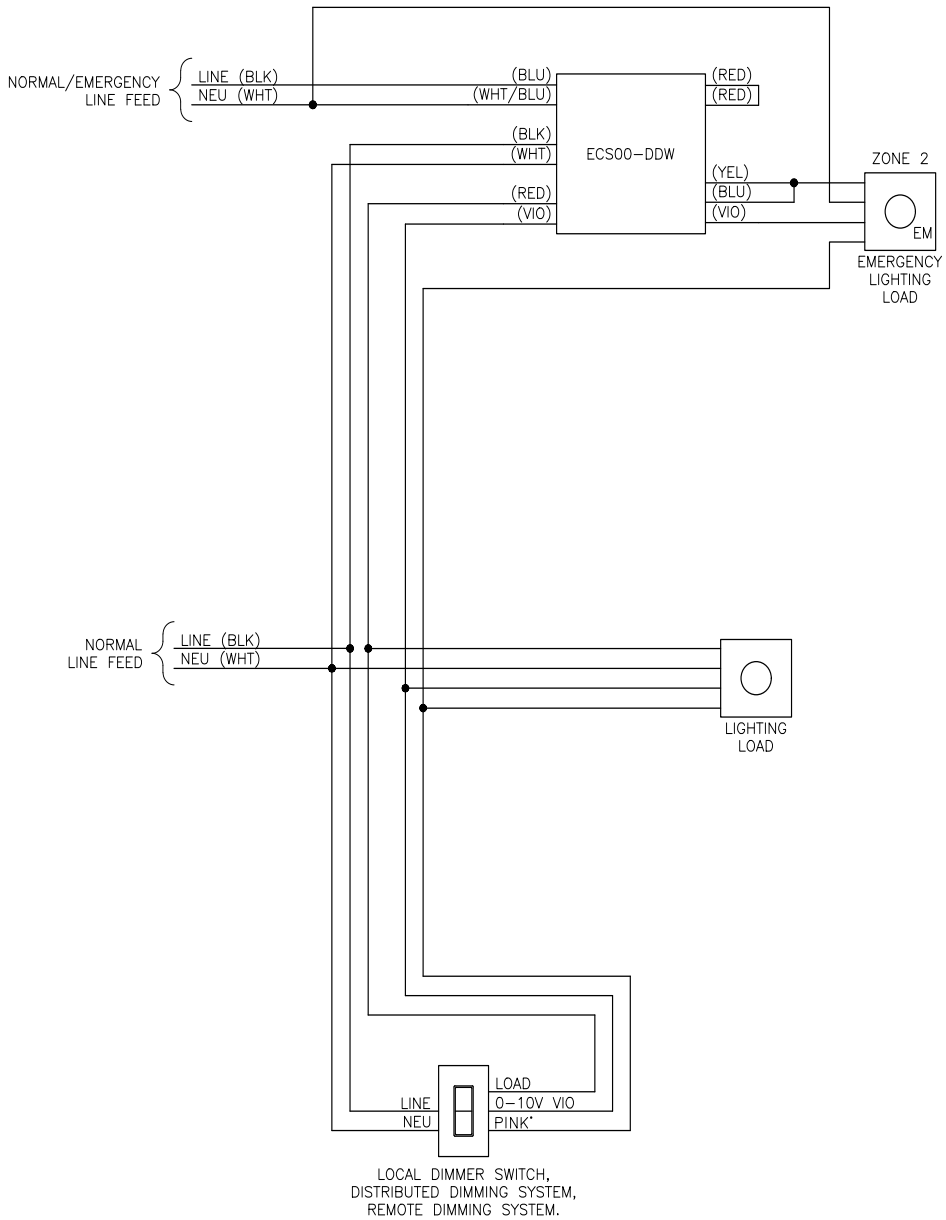

* Depending on manufacture date, pink wires may be gray

UL924 BYPASS, AUTO-ON/OFF, MANUAL-ON/OFF

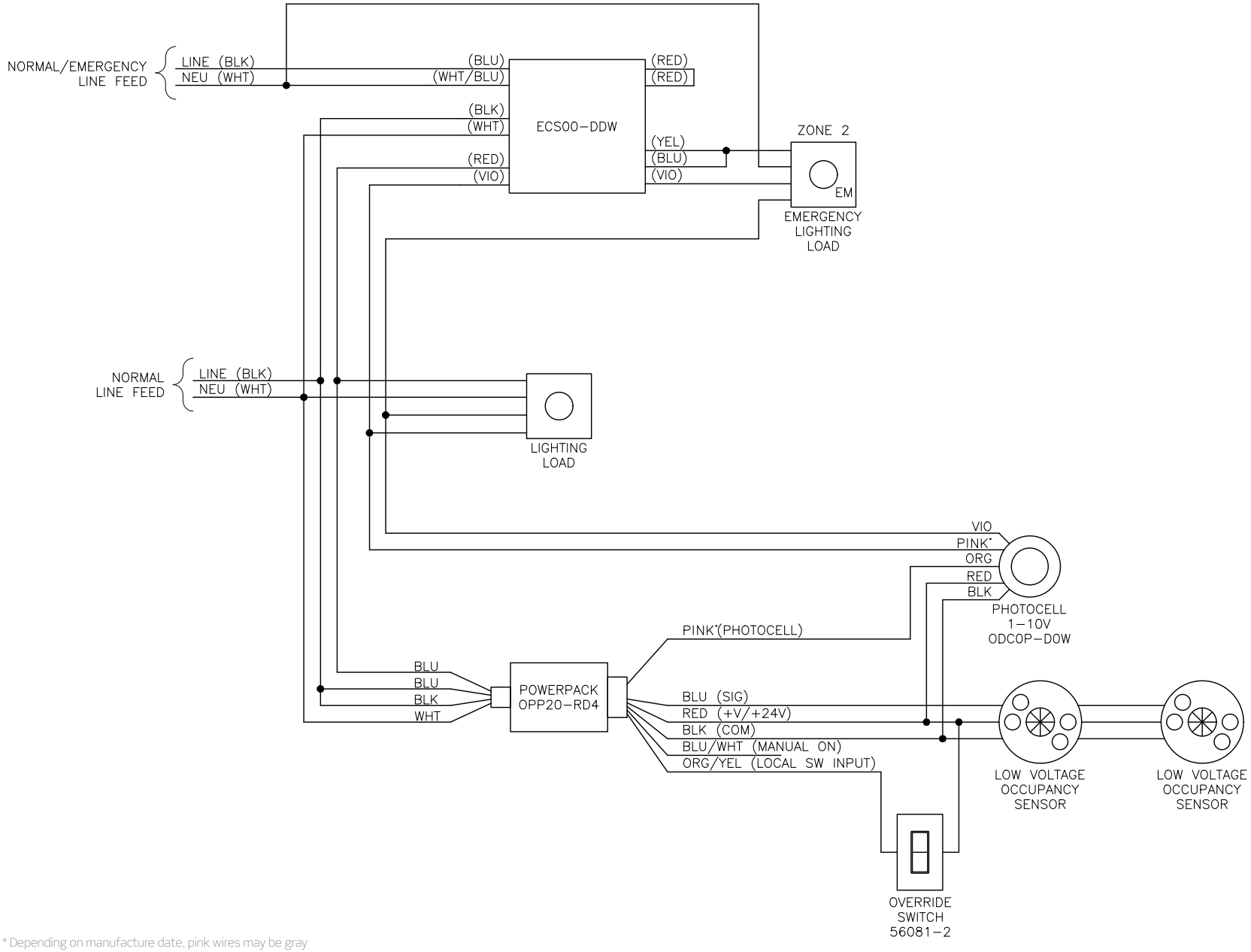

* Depending on manufacture date, pink wires may be gray

UL924 BYPASS, GREENMAX 0-10V, 4-WIRE DIMMED LOAD

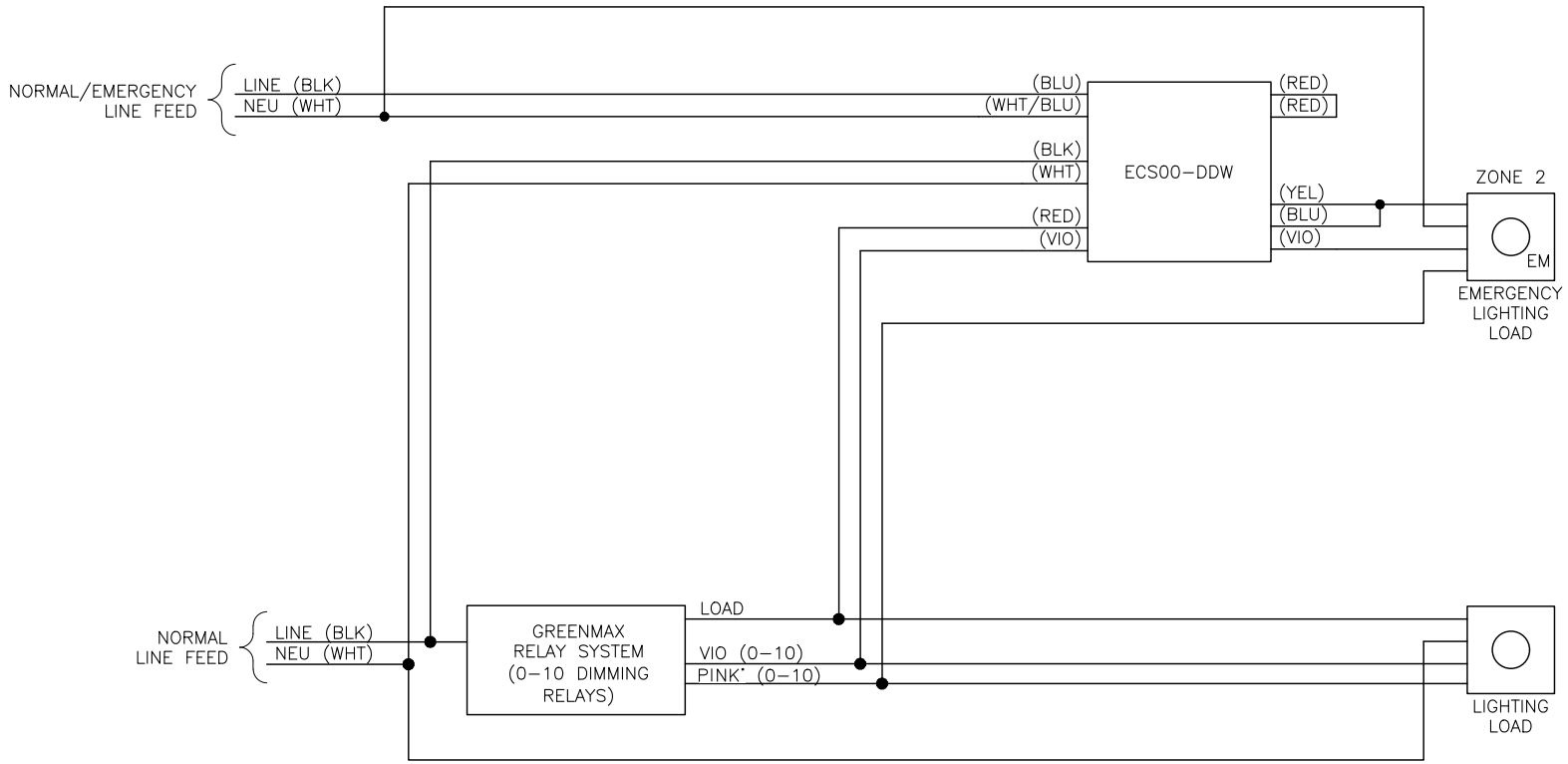

* Depending on manufacture date, pink wires may be gray

UL924 BYPASS, 0-10V, 4-WIRE SECTOR RELAY DIMMED LOAD

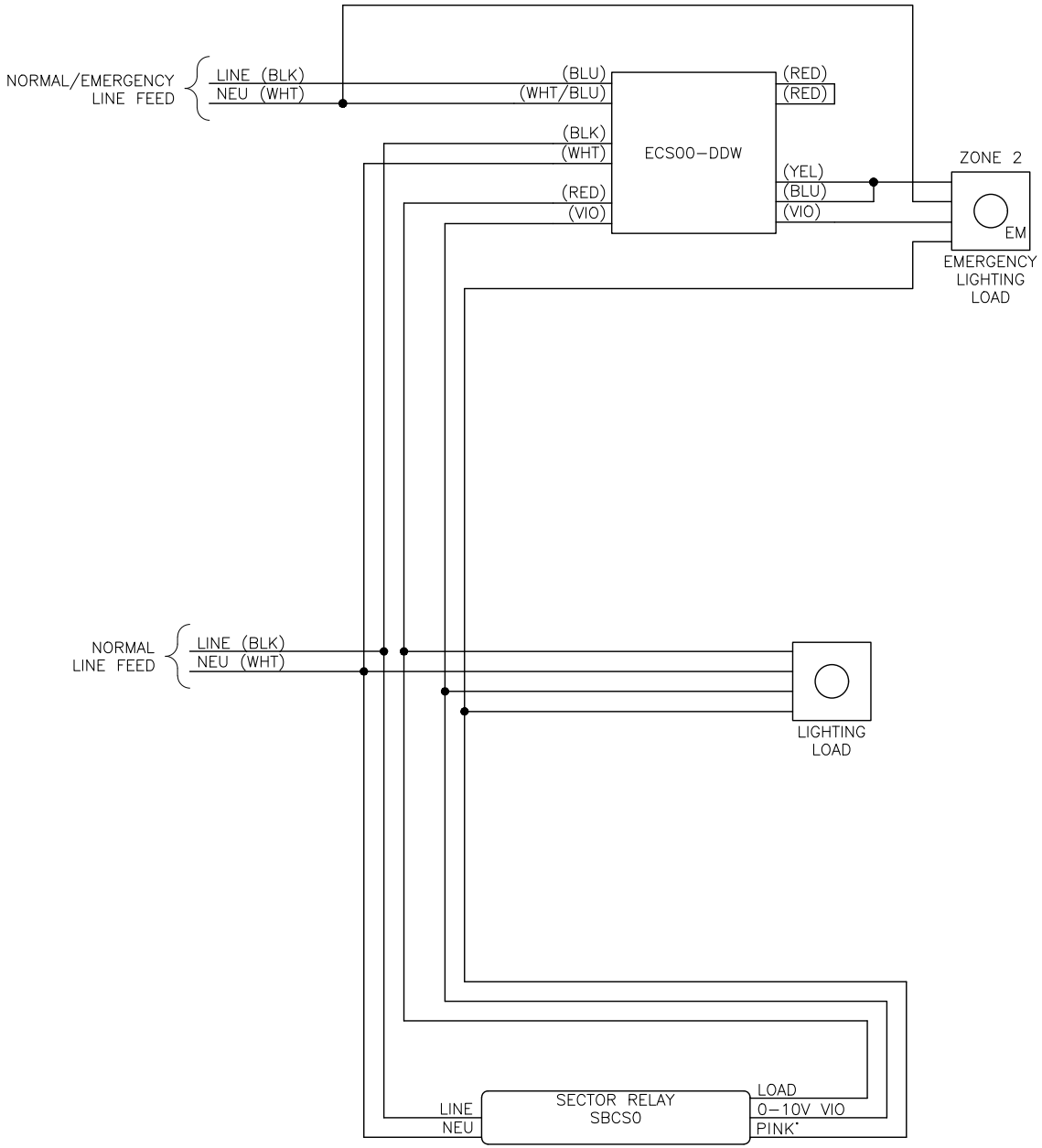

* Depending on manufacture date, pink wires may be gray

UL924 BYPASS, PROVOLT, AUTO-ON/OFF, MANUAL-ON/OFF

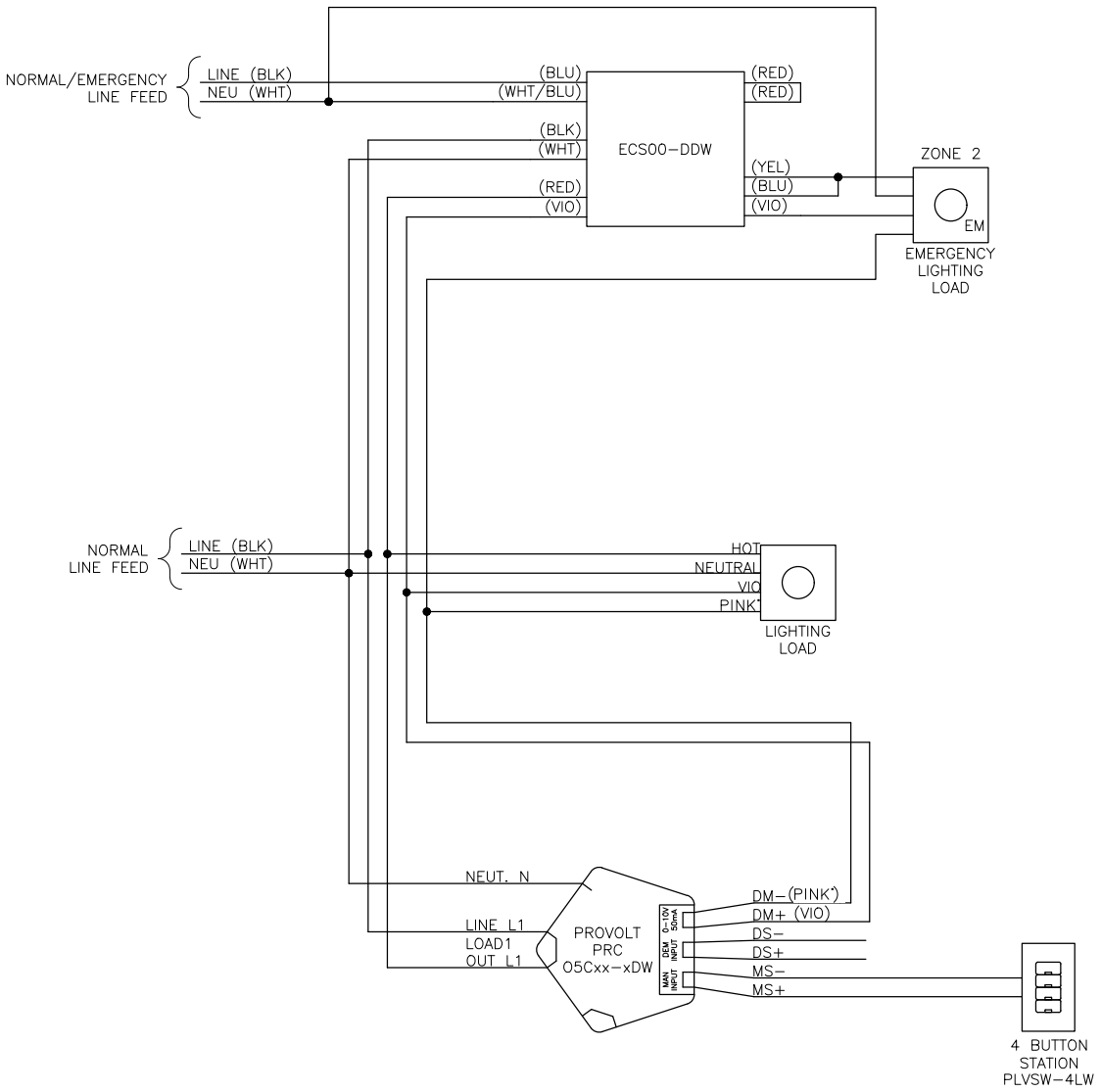

* Depending on manufacture date, pink wires may be gray

NOTES: Terminations not participating in this scheme not shown for clarity.

UL924 BYPASS DAYLIGHT HARVESTING, PROVOLT DIMMING, 2 ZONES

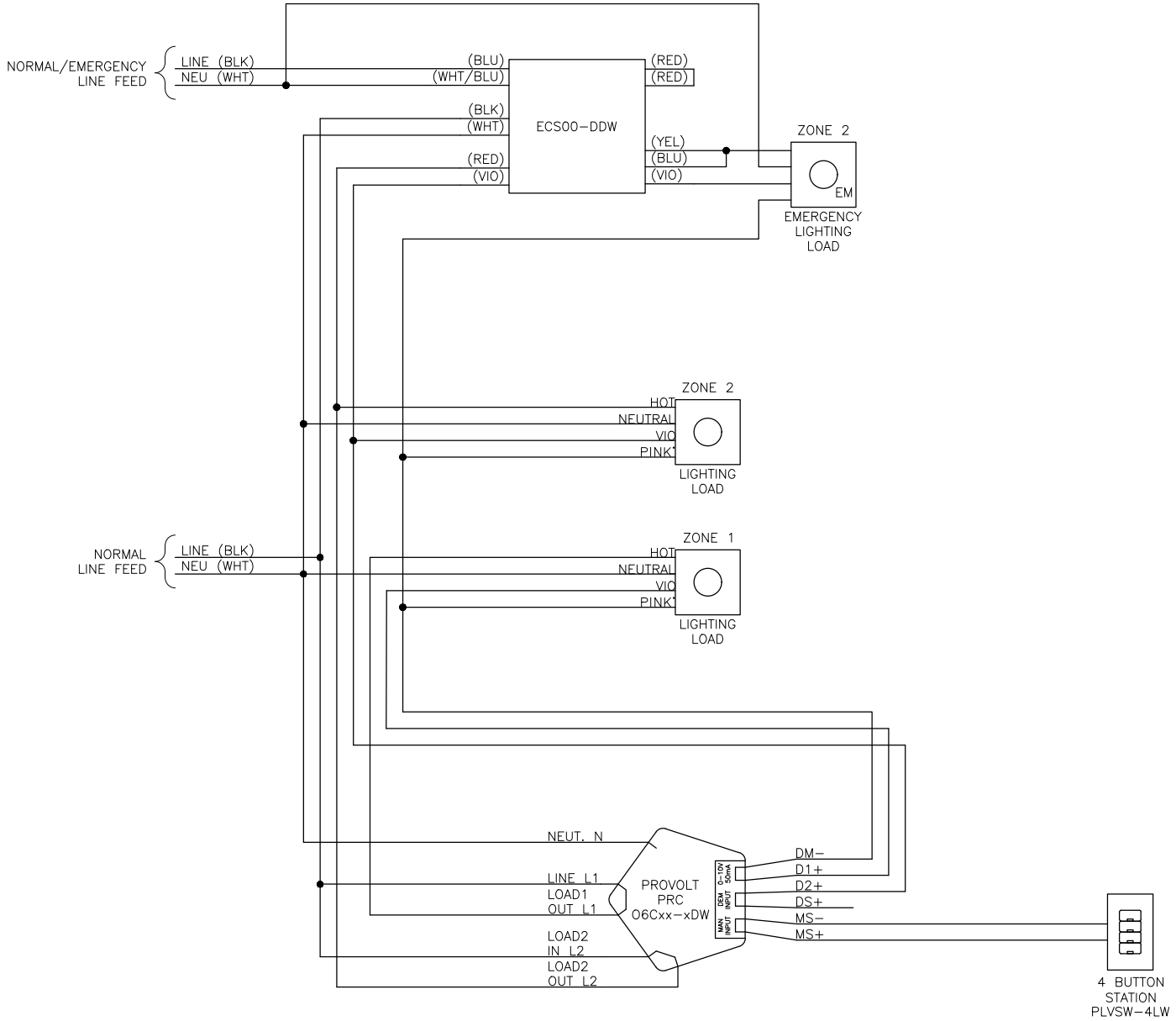

* Depending on manufacture date, pink wires may be gray

NOTES: Terminations not participating in this scheme not shown for clarity.

UL924 BYPASS DAYLIGHT HARVESTING, DIMMING, 2 ZONES

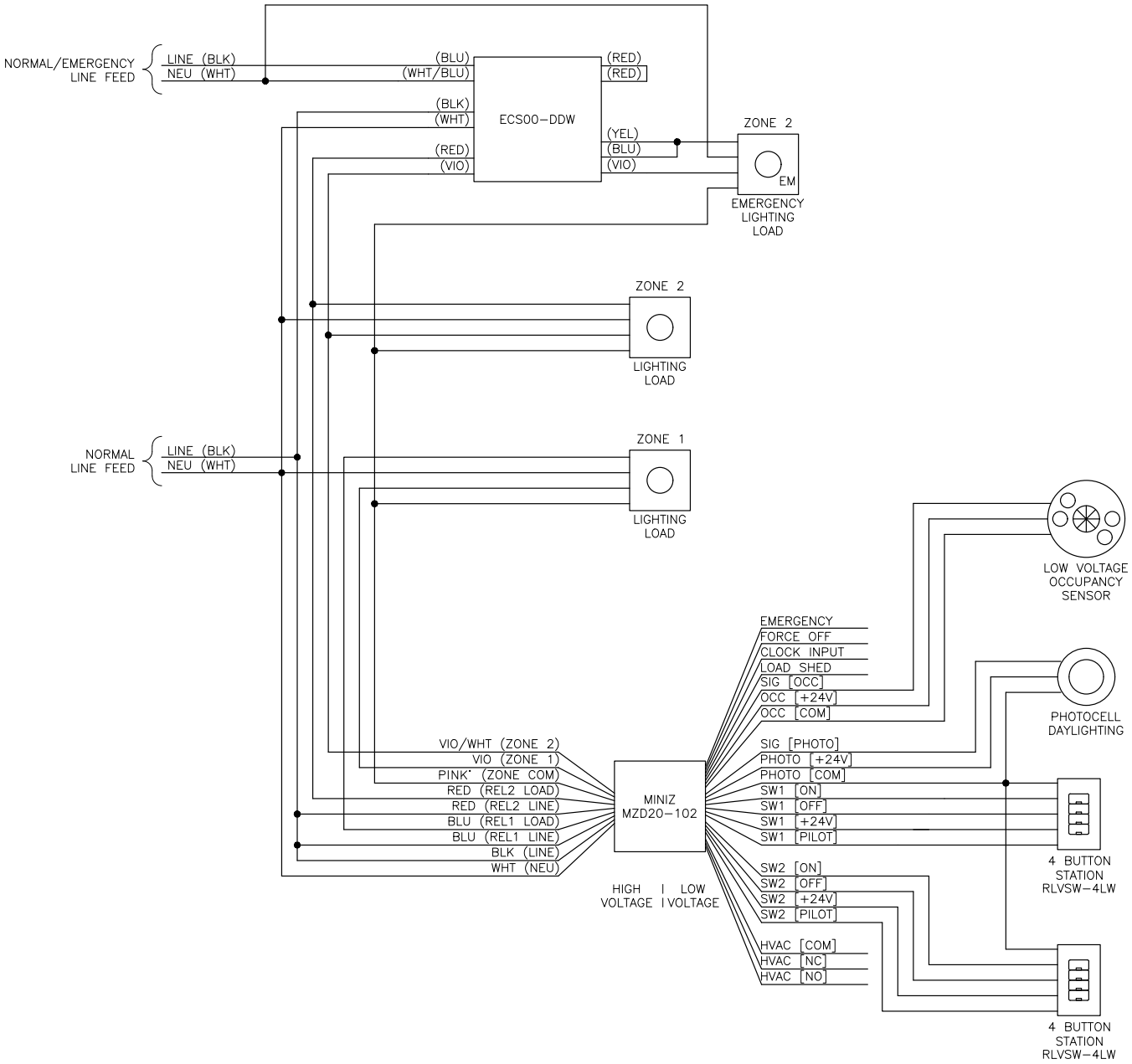

* Depending on manufacture date, pink wires may be gray

UL924 BYPASS, PE300 LOAD EQUAL TO 0-10V DIMMING

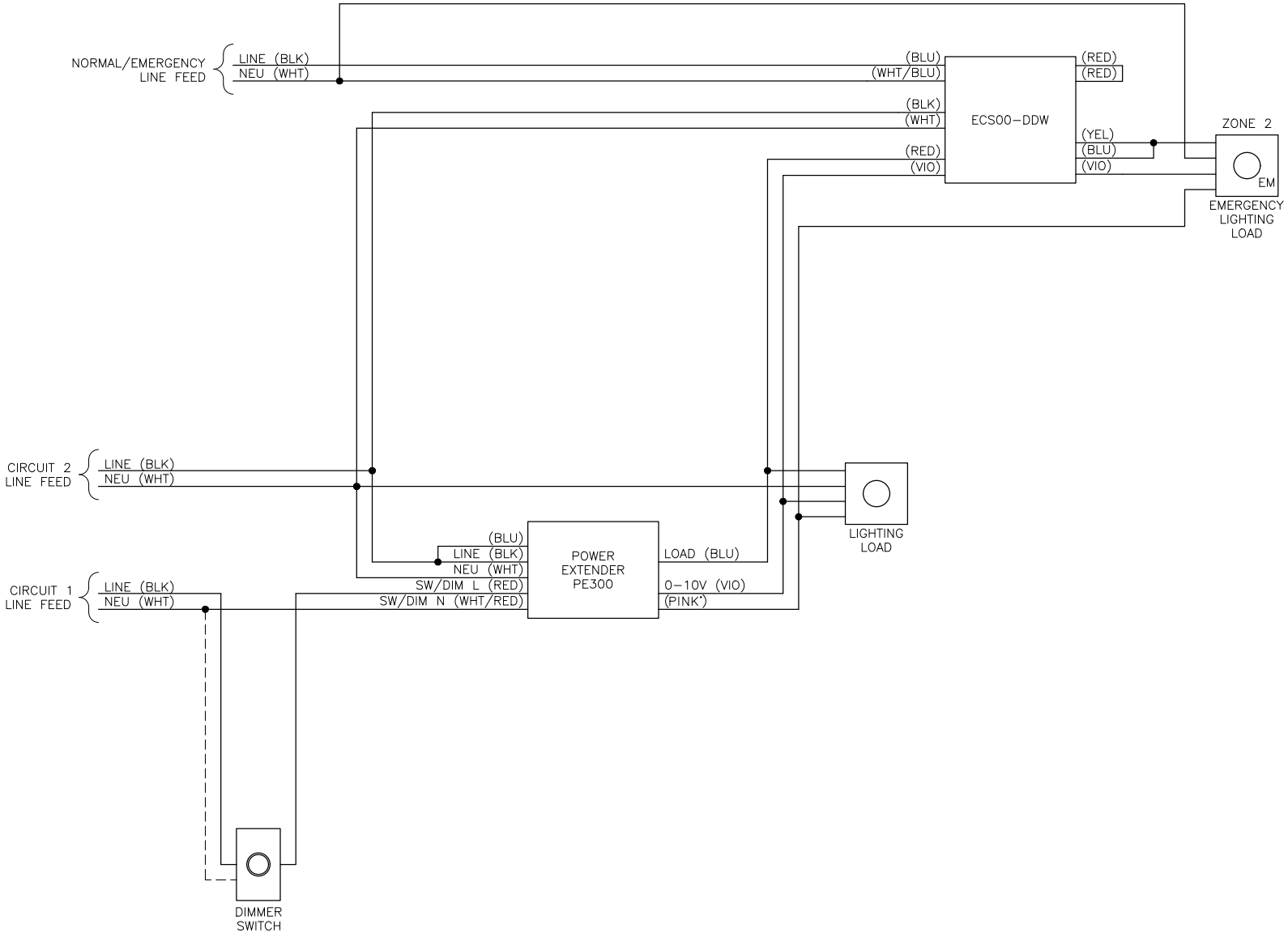

* Depending on manufacture date, pink wires may be gray

DRC CONFIGURATION FOR UL924 COMPLIANT OPERATION, TYPE 1

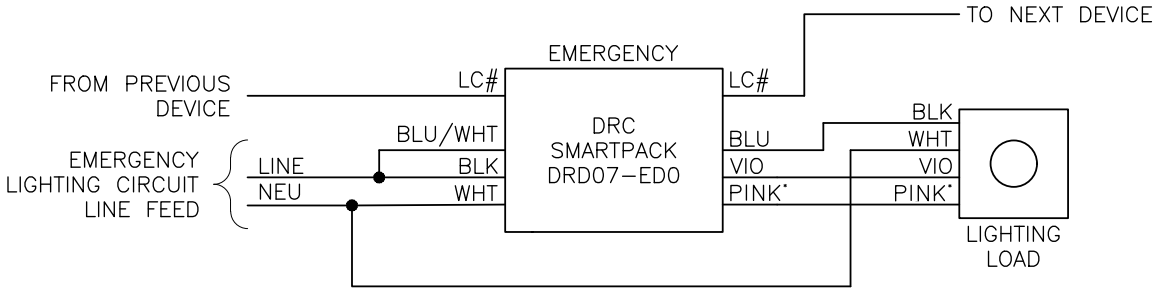

* Depending on manufacture date, pink wire may be gray

NOTES:
1. DRC draws control power from the same power source as the controlled load.
2. Previous LumaCAN device must transmit/pass LumaCAN power to emergency power DRC.
3. Upon loss of LumaCAN power, emergency DRC goes into pre-configured emergency mode.
4. Upon restoration of LumaCAN power, emergency DRC resumes normal operation.

DRC CONFIGURATION FOR UL924 COMPLIANT OPERATION, TYPE 2

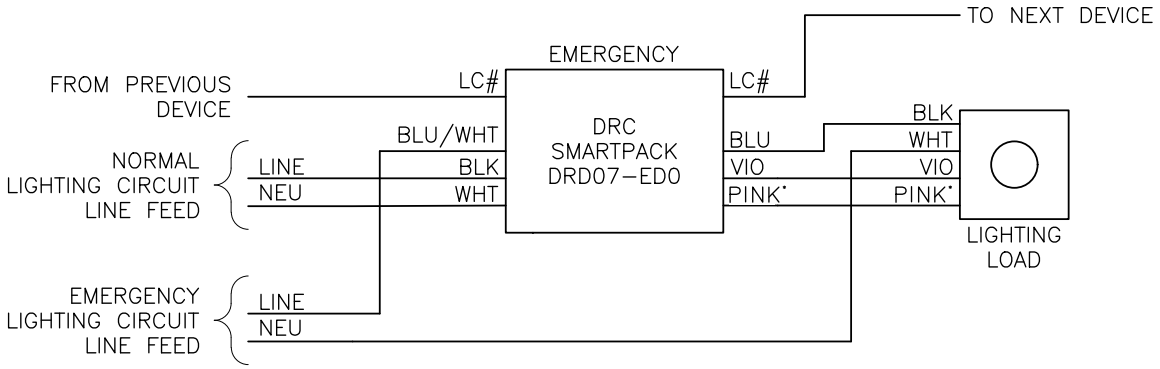

* Depending on manufacture date, pink wire may be gray

NOTES:
1. Emergency DRC draws control power from the normal power source.
2. Emergency DRC controlled load on emergency power.
3. Upon loss of normal power, emergency DRC goes into pre-configured emergency mode.
4. Upon restoration of normal power, DRC resumes normal operation.
5. Derive normal power from local lighting normal feeder (unswitched).

UL1008 TRANSFER, 2-WIRE (PHASE) DIMMED LOAD

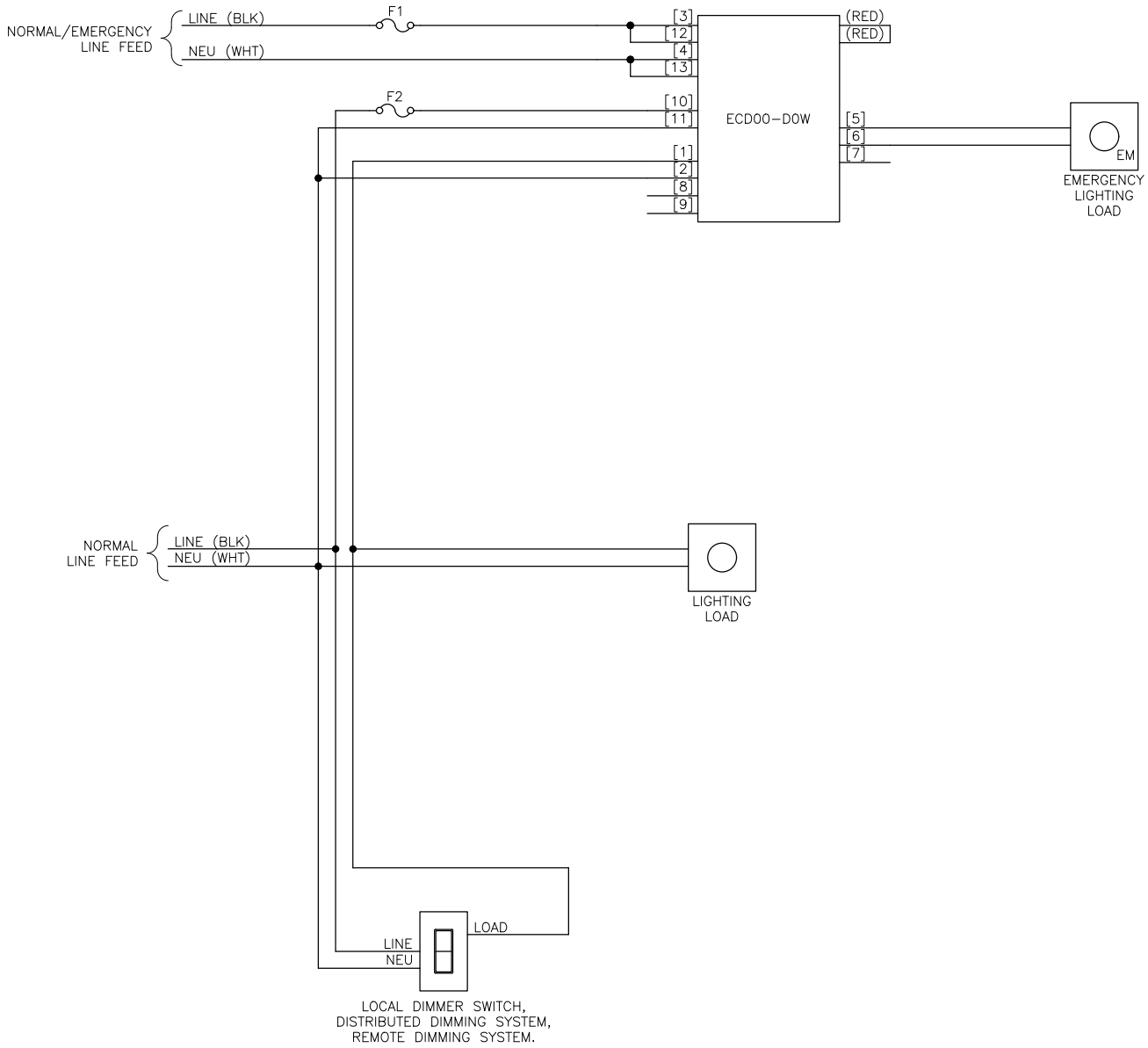

UL1008 TRANSFER, PE100

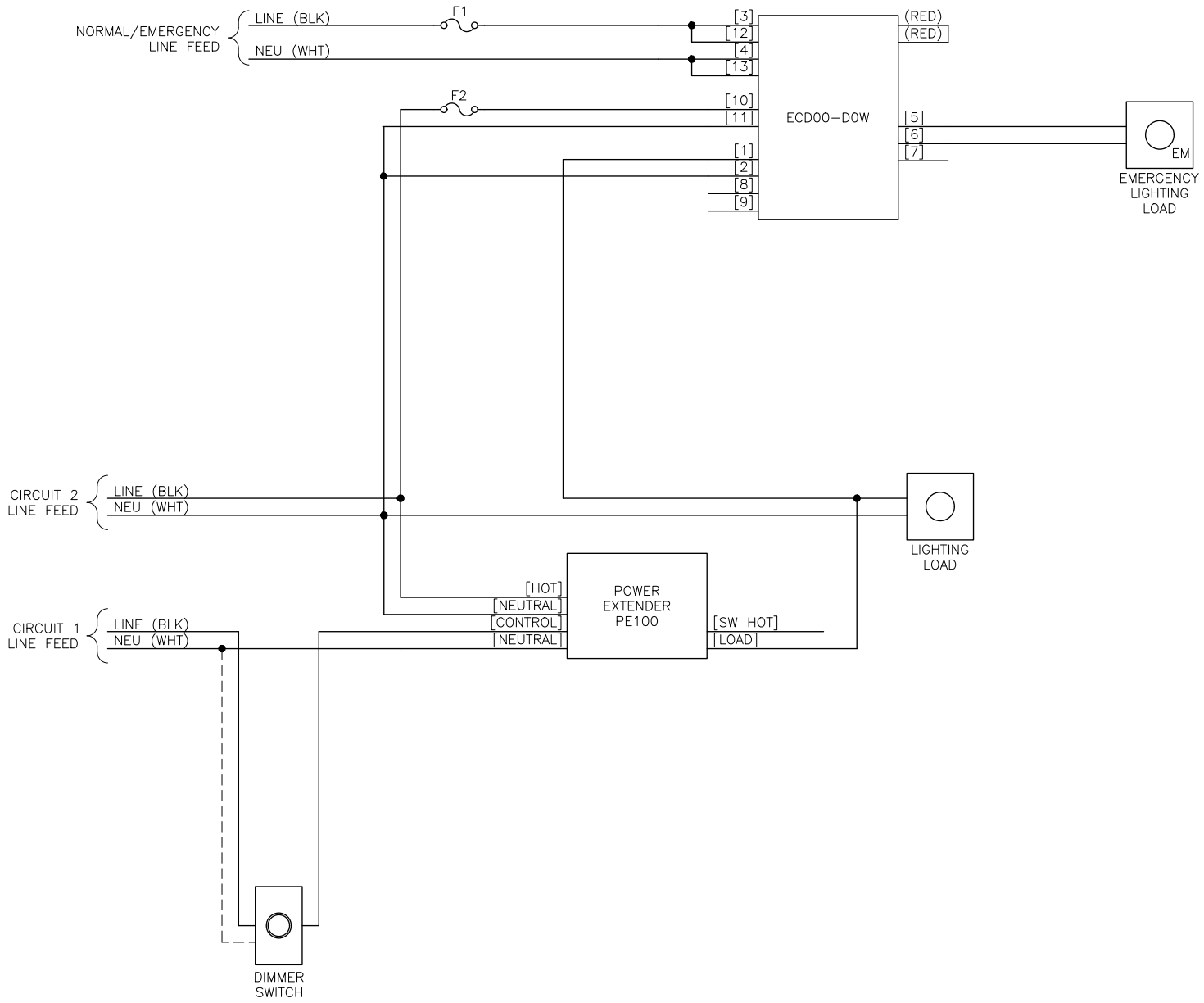

UL1008 TRANSFER, PE200 LIGHTING LOAD EQUAL TO MARK X BALLASTS

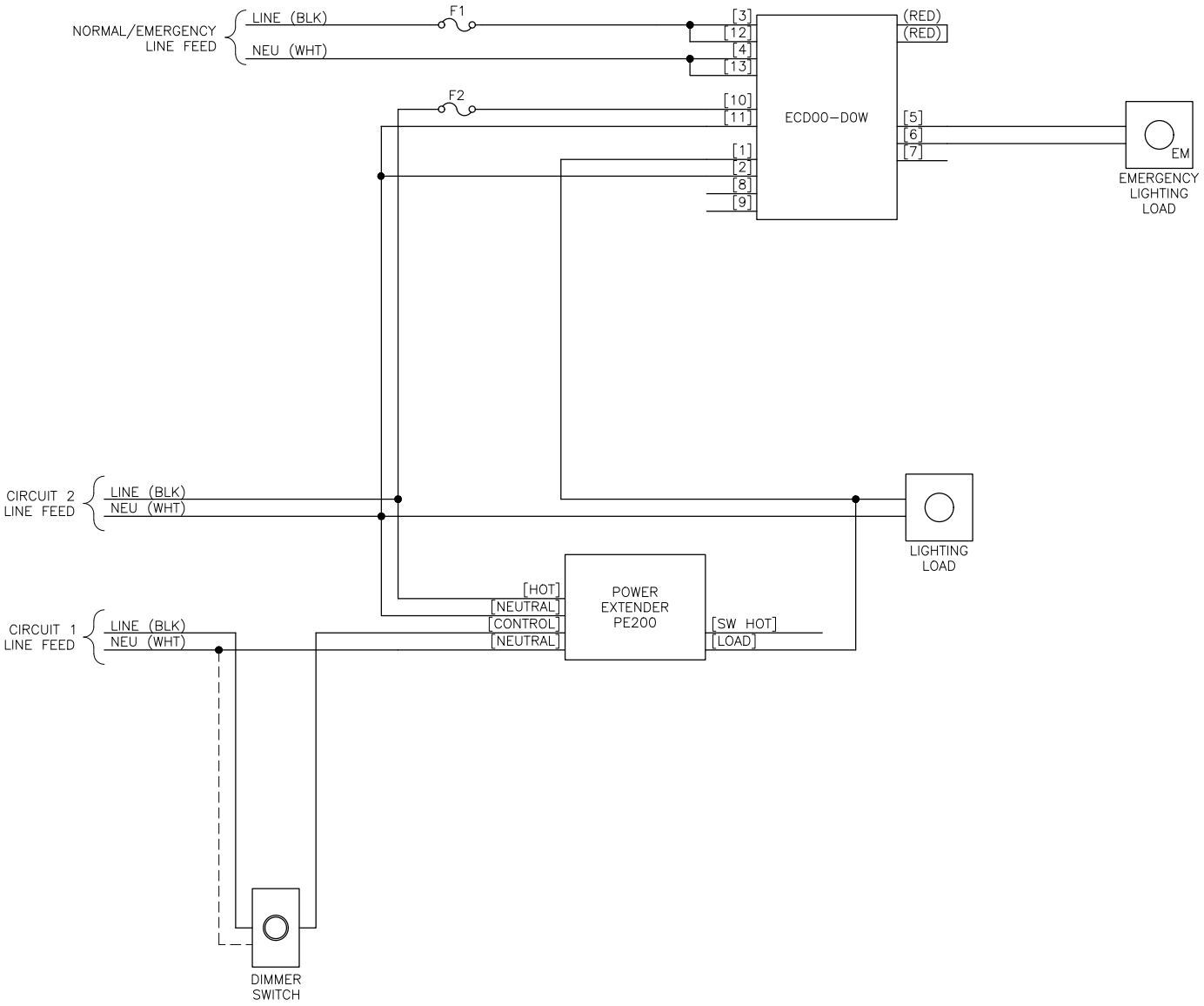

UL1008 TRANSFER, PE400

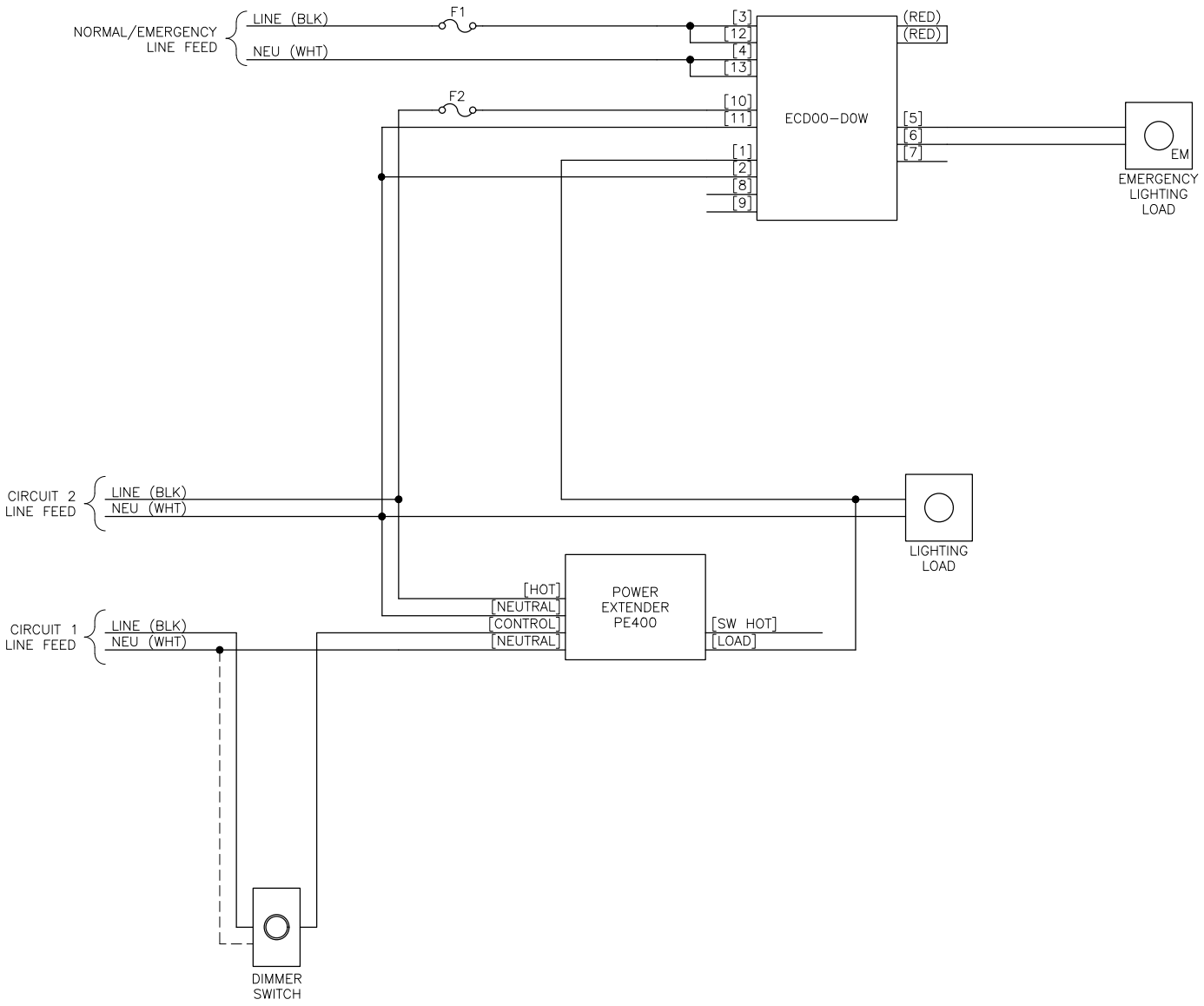

REVERSE PHASE DIMMED FIXTURES WITH UL1008 TRANSFER
PE500, UL1008 TRANSFER, IP710-LFZ

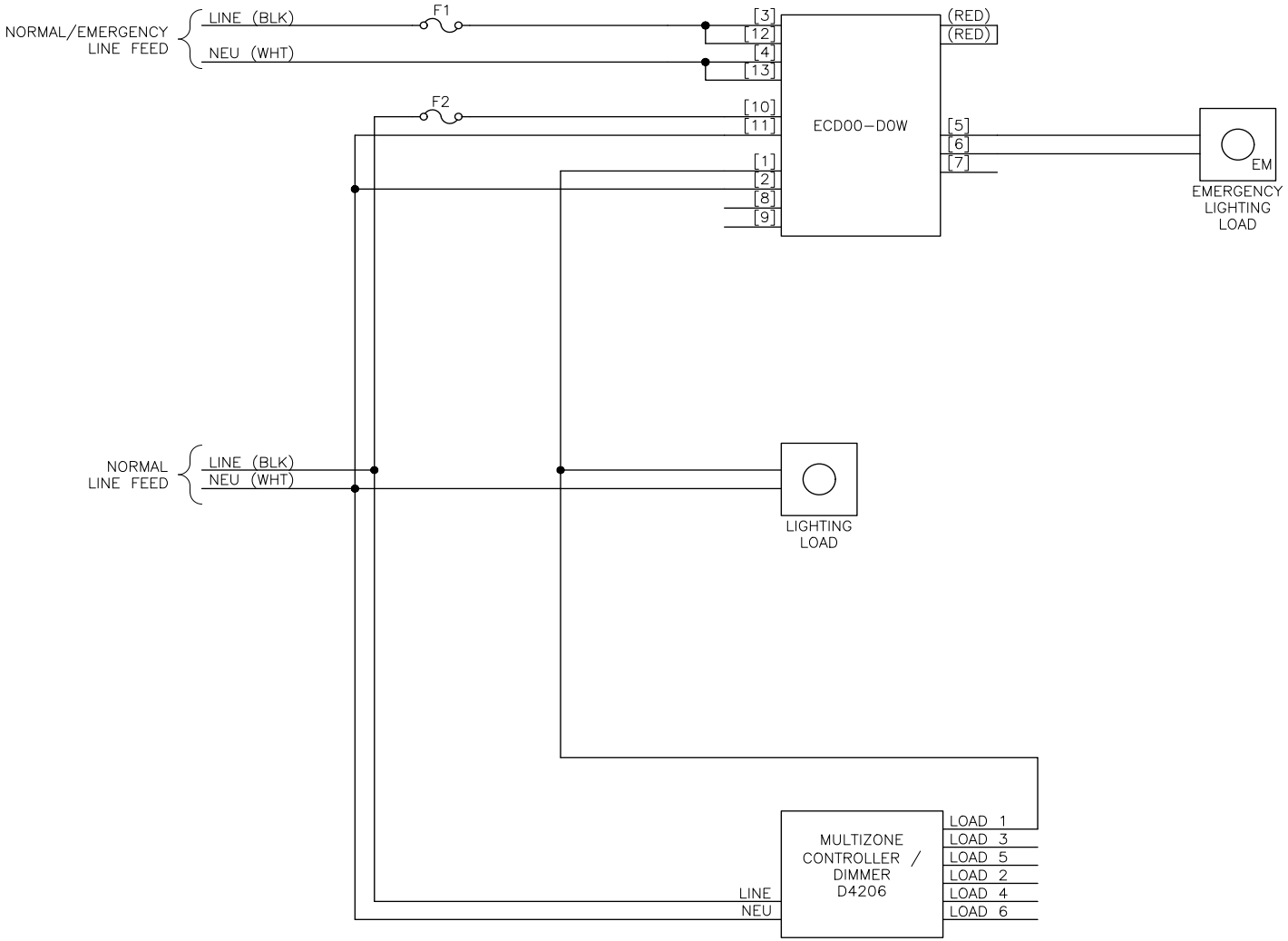

UL1008 TRANSFER, 2-WIRE (PHASE) DIMMED LOAD

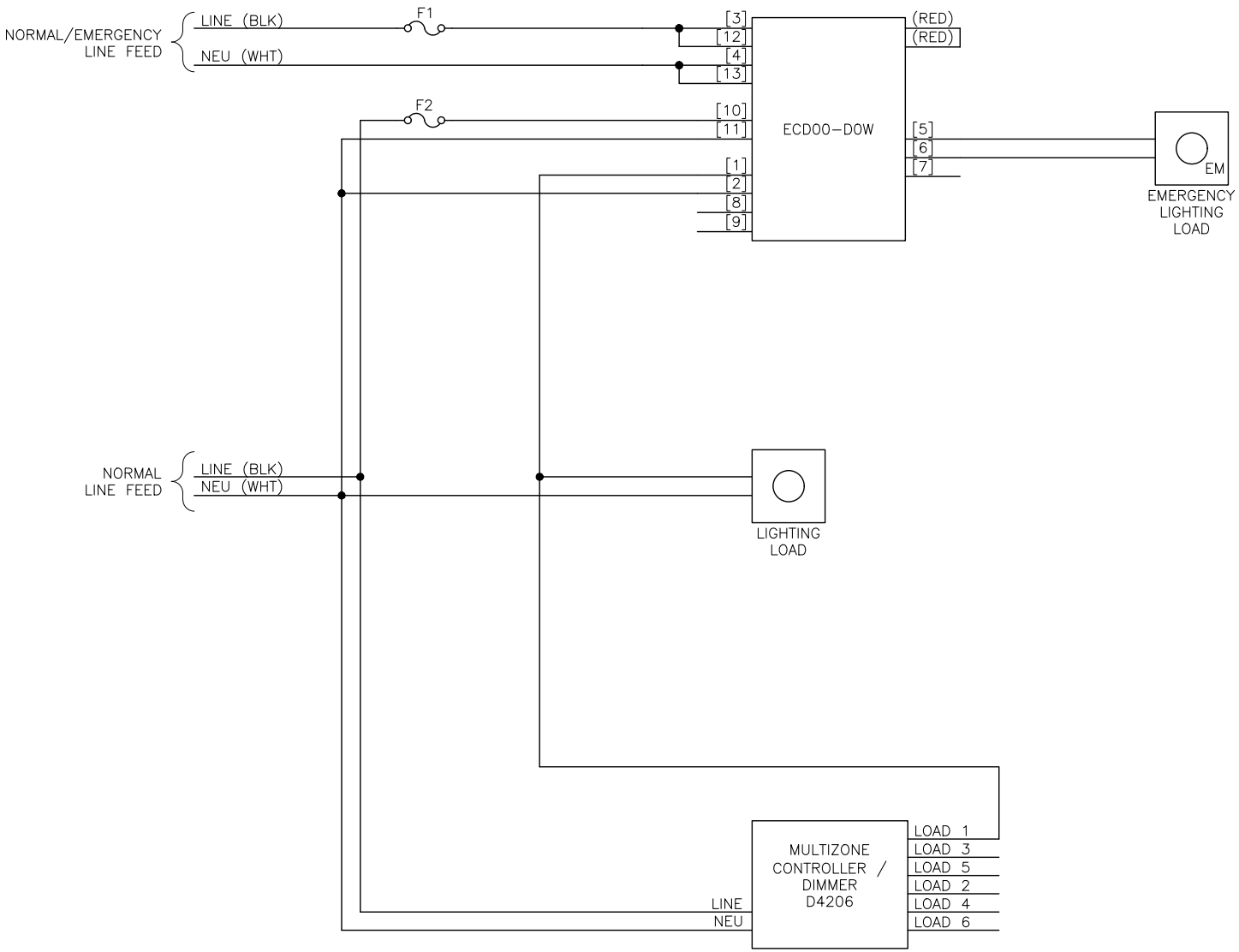

UL1008 TRANSFER, 2-WIRE (PHASE) DIMMED LOAD

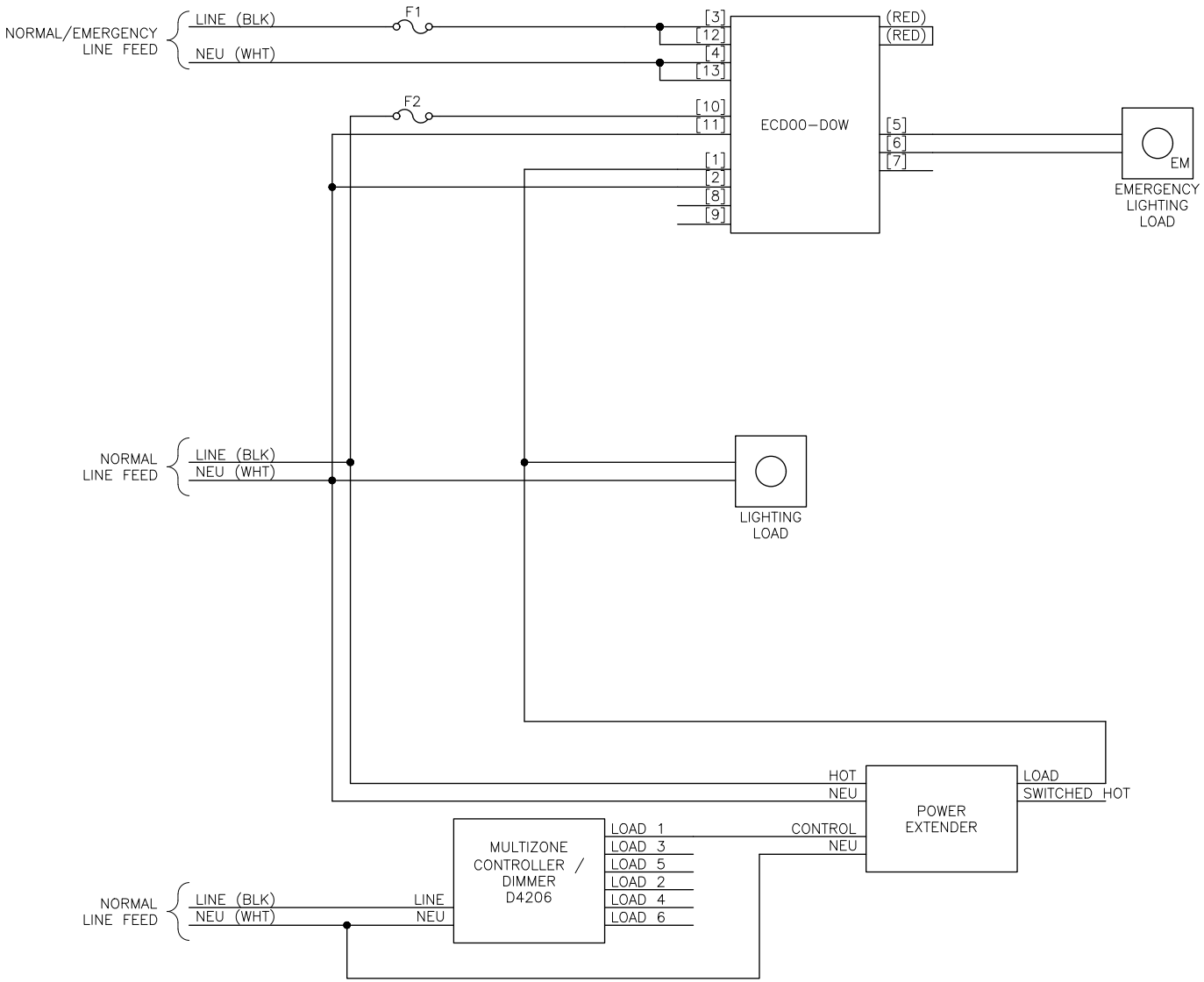

UL1008 TRANSFER, 2-WIRE (PHASE) DIMMED LOAD

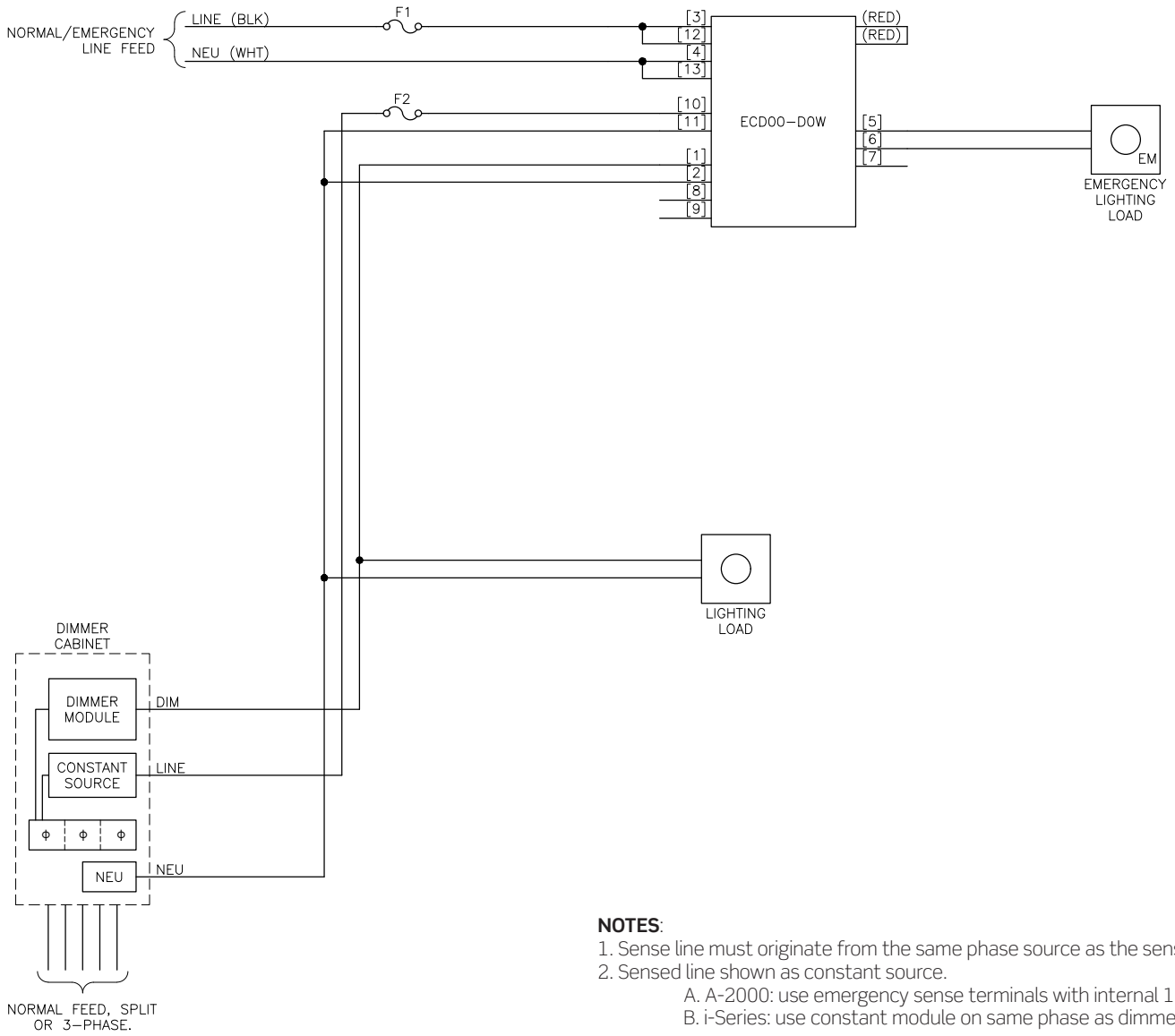

NOTES:

1. Sense line must originate from the same phase source as the sensed circuit. Multiple UL924 devices may use the same sense line.
2. Sensed line shown as constant source.
   A. A-2000: use emergency sense terminals with internal 10A breaker
   B. i-Series: use constant module on same phase as dimmer module

UL1008 TRANSFER, 3-WIRE DIMMED LOAD

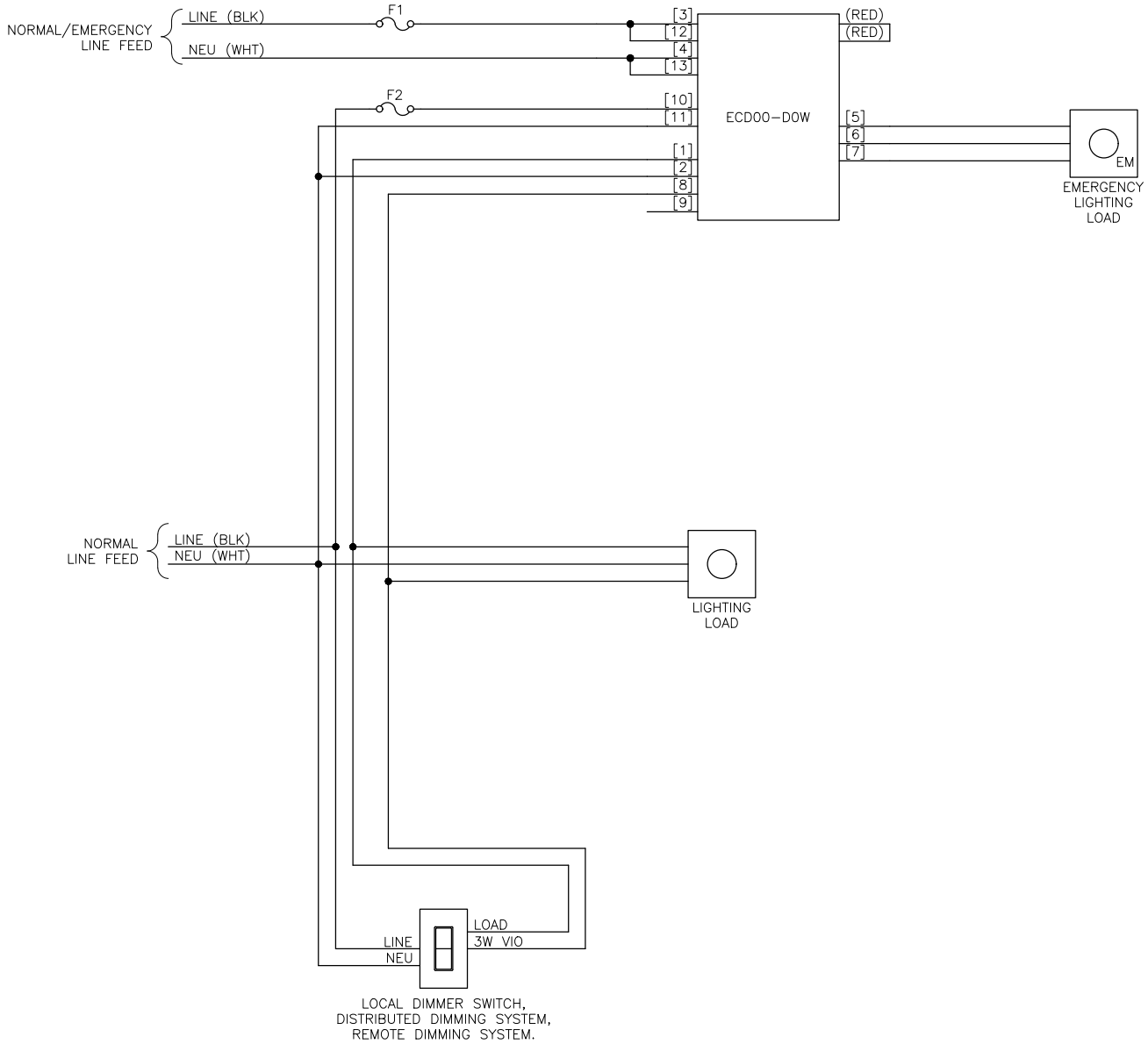

UL1008 TRANSFER, PE200 LIGHTING LOAD EQUAL TO 3-WIRE BALLASTS

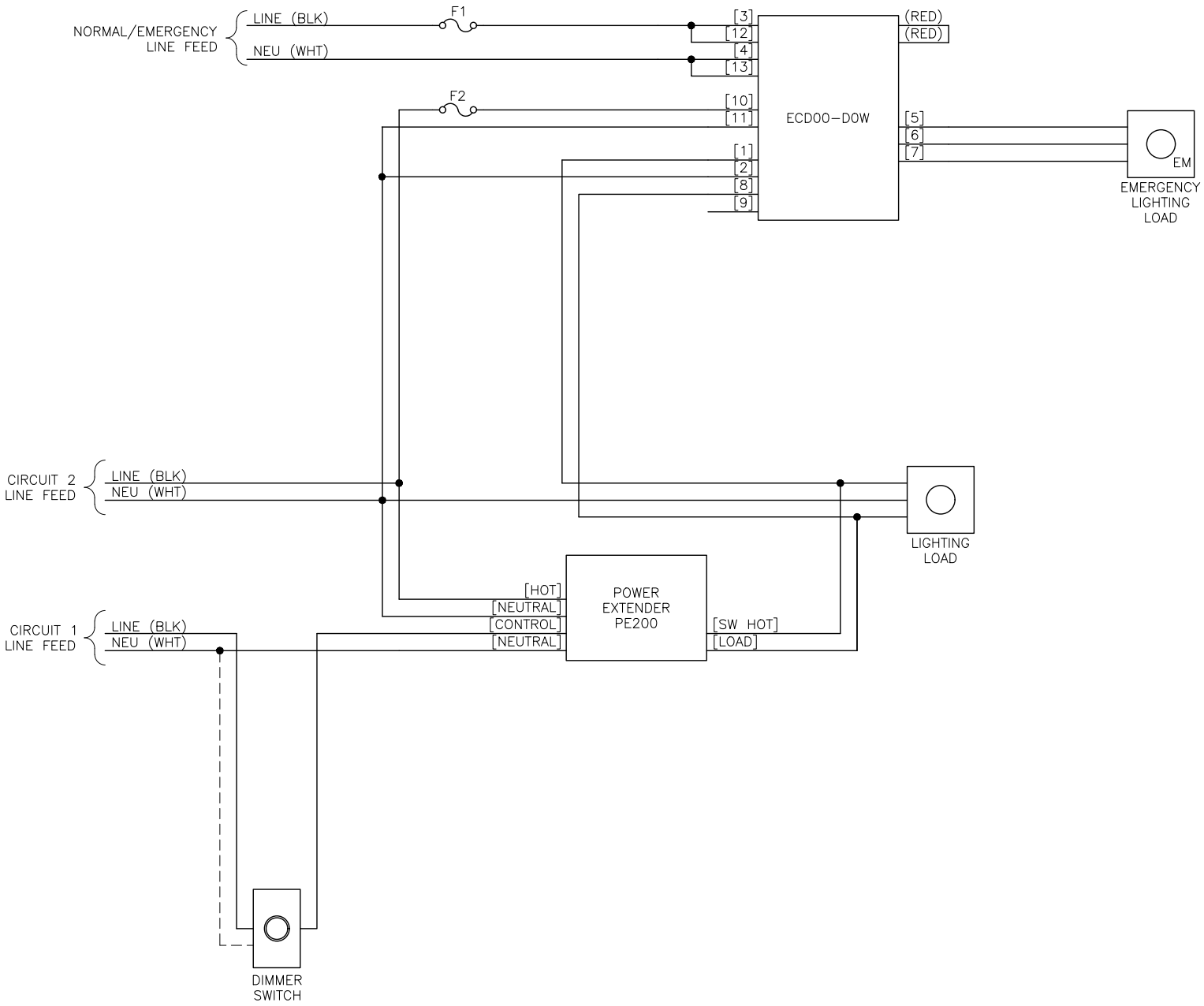

UL1008 TRANSFER, 3-WIRE DIMMED LOAD

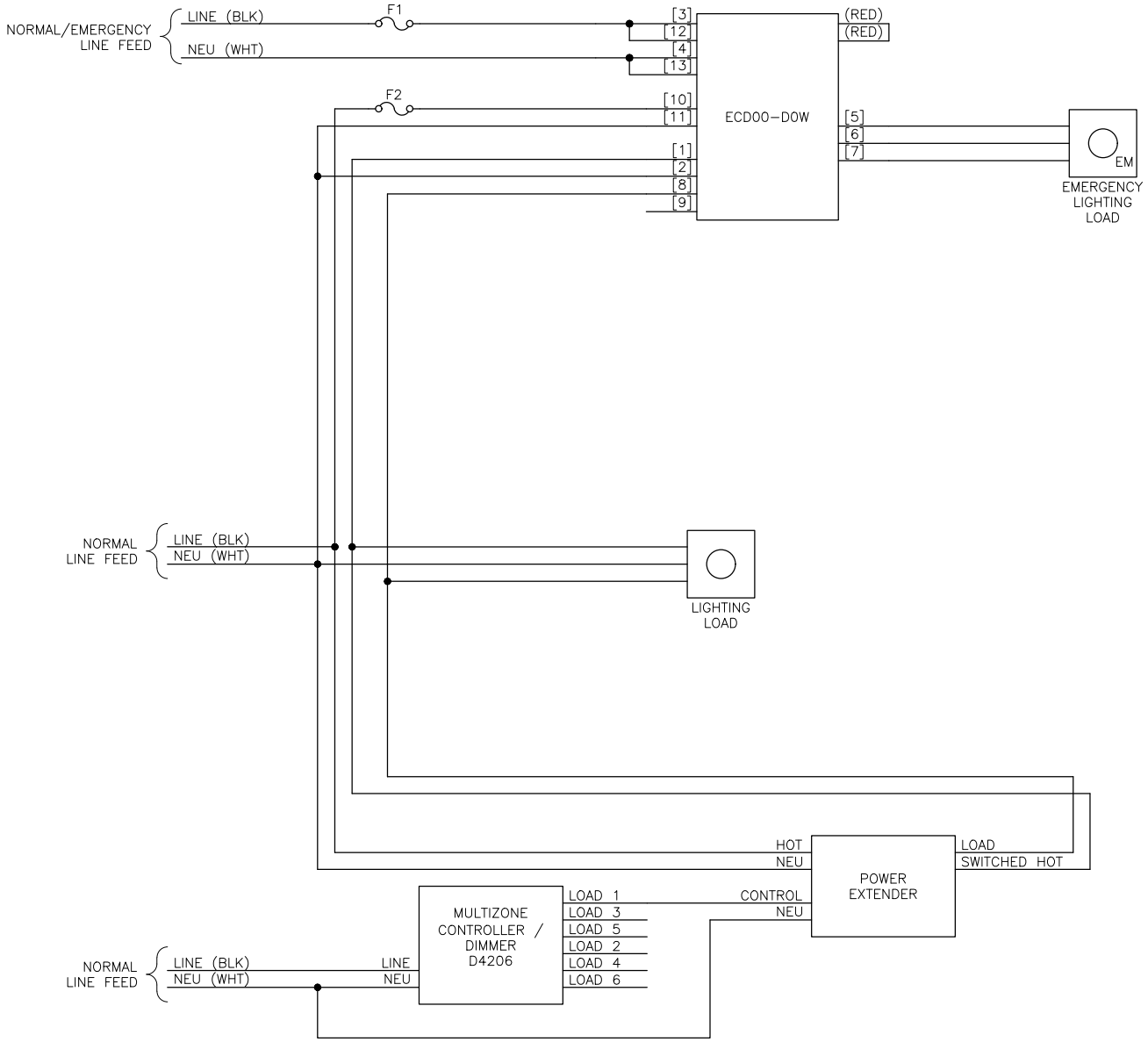

UL1008 TRANSFER, 3-WIRE DIMMED LOAD

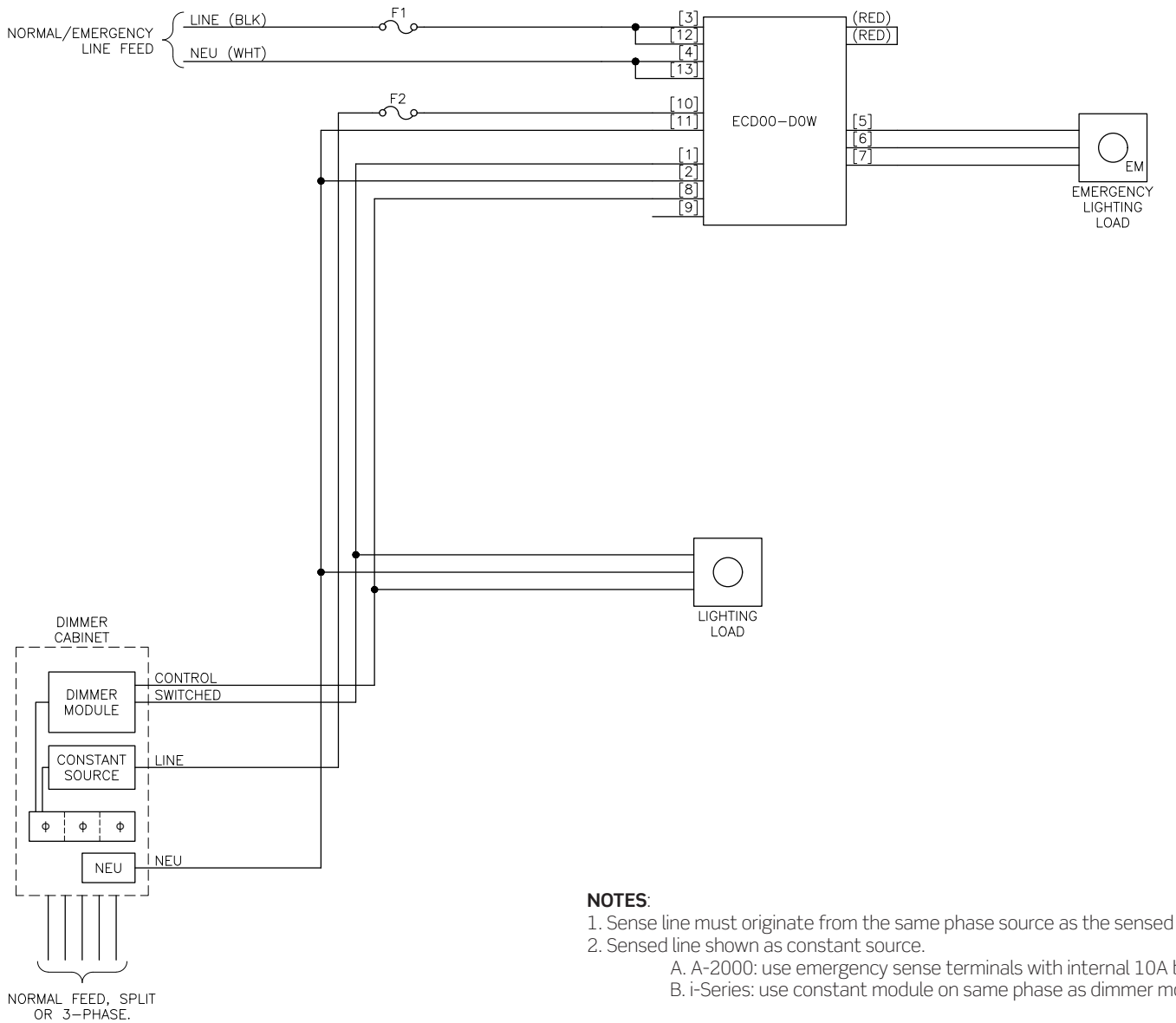

NOTES:

1. Sense line must originate from the same phase source as the sensed circuit. Multiple UL924 devices may use the same sense line.
2. Sensed line shown as constant source.
   A. A-2000: use emergency sense terminals with internal 10A breaker
   B. i-Series: use constant module on same phase as dimmer module

UL1008 TRANSFER, 0-10V, 4-WIRE DIMMED LOAD

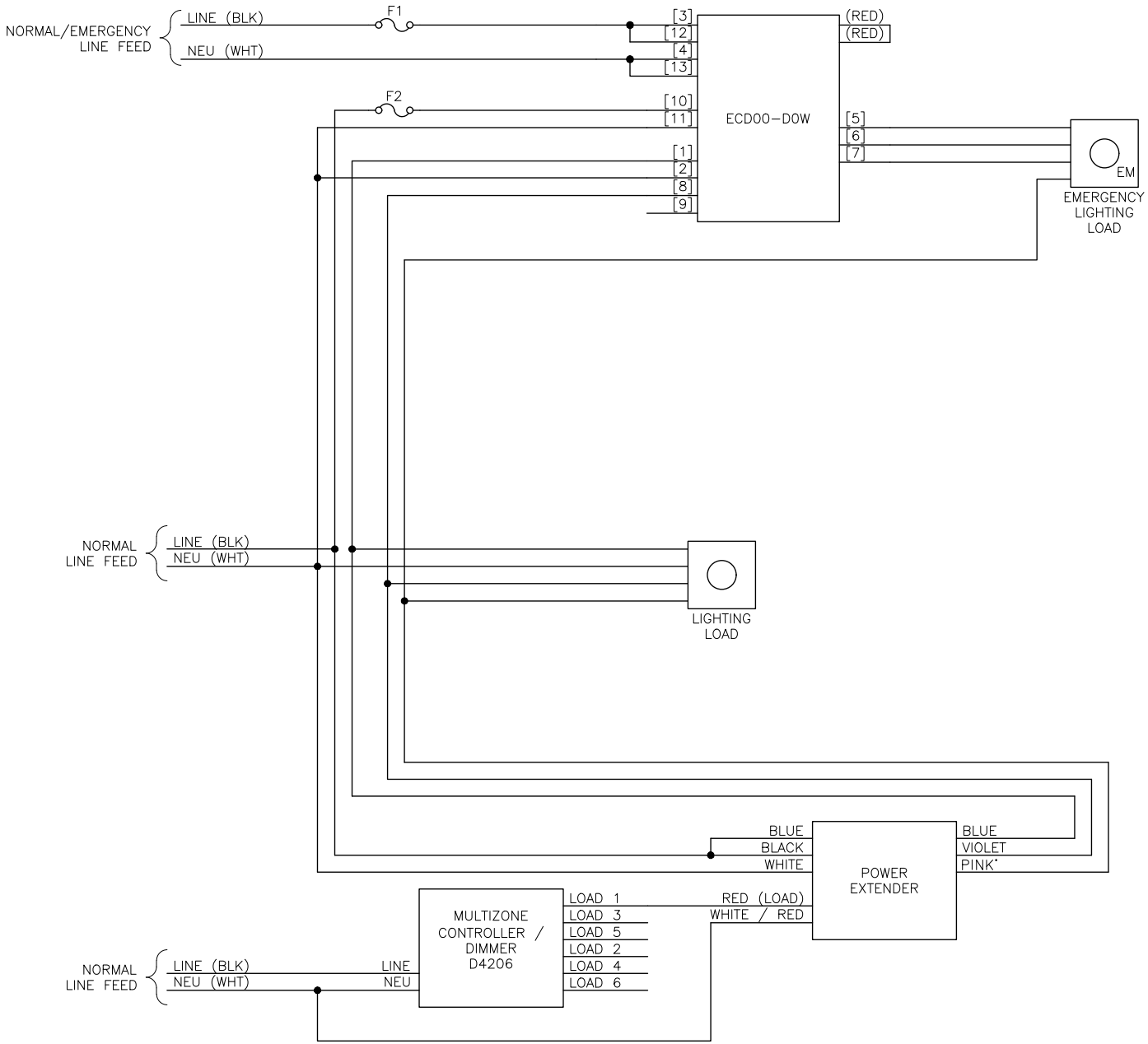

* Depending on manufacture date, pink wire may be gray

UL1008 TRANSFER, 0-10V, 4-WIRE DIMMED LOAD

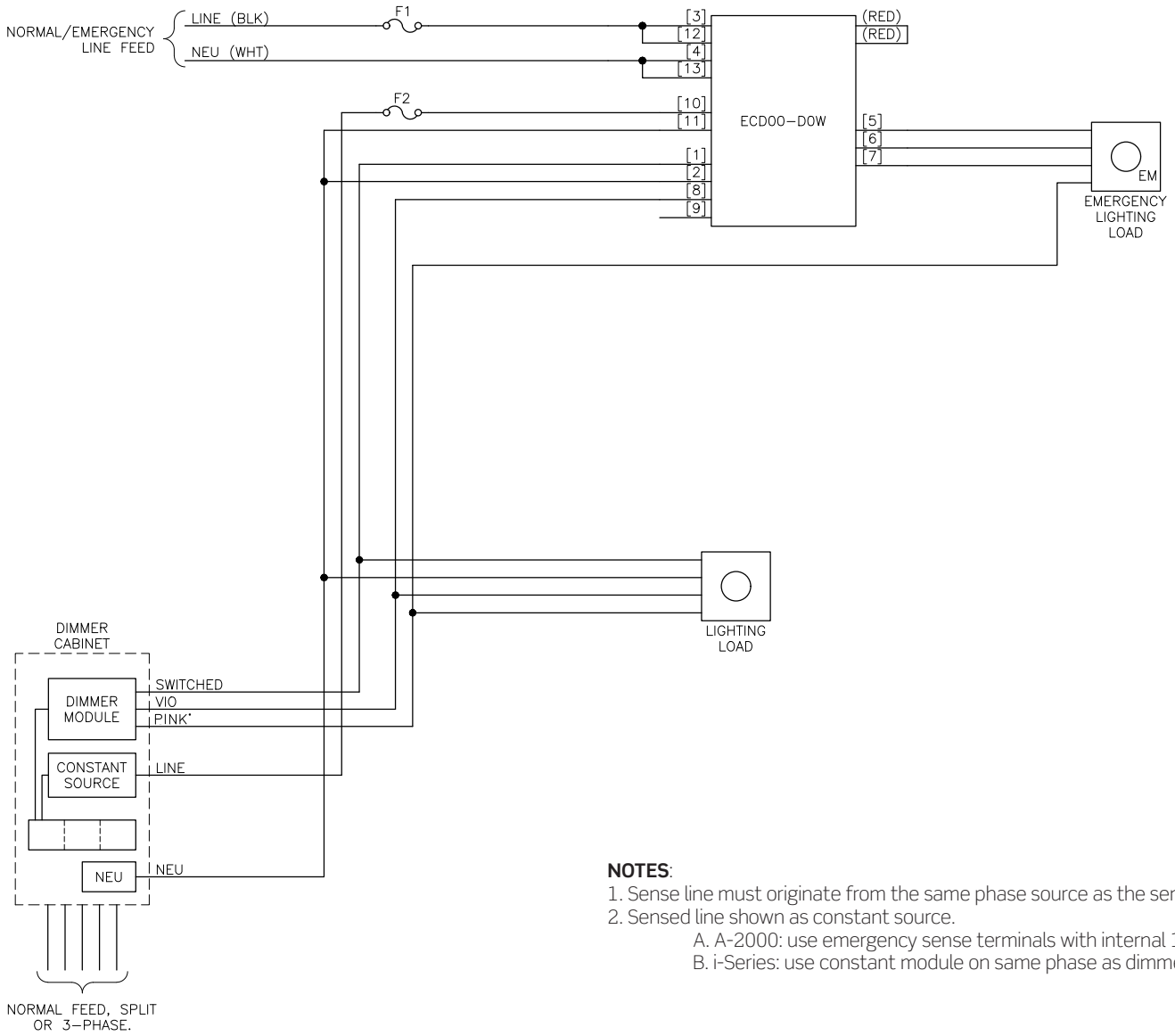

NOTES:

1. Sense line must originate from the same phase source as the sensed circuit. Multiple UL924 devices may use the same sense line.
2. Sensed line shown as constant source.
   A. A-2000: use emergency sense terminals with internal 10A breaker
   B. i-Series: use constant module on same phase as dimmer module

* Depending on manufacture date, pink wire may be gray

Leviton Manufacturing Co., Inc. Lighting & Controls
20497 SW Teton Avenue, Tualatin, OR 97062 **tel** 800-736-6682 **tech line** (6:00AM-4:00PM PT Mon-Fri) 800-959-6004

Leviton Manufacturing Co., Inc. Global Headquarters
201 North Service Road, Melville, NY 11747-3138 **tel** 800-323-8920 **tech line** (8:00AM-10:00PM ET Mon-Fri, 9:00AM-7:00PM ET Sat, 9:00AM-5:00PM ET Sun) 800-824-3005

Visit our Website at: www.leviton.com/emergencycontrols
©2022 Leviton Manufacturing Co., Inc. All rights reserved. Subject to change without notice.

G-10363B/J22-mm
REV OCT 2022