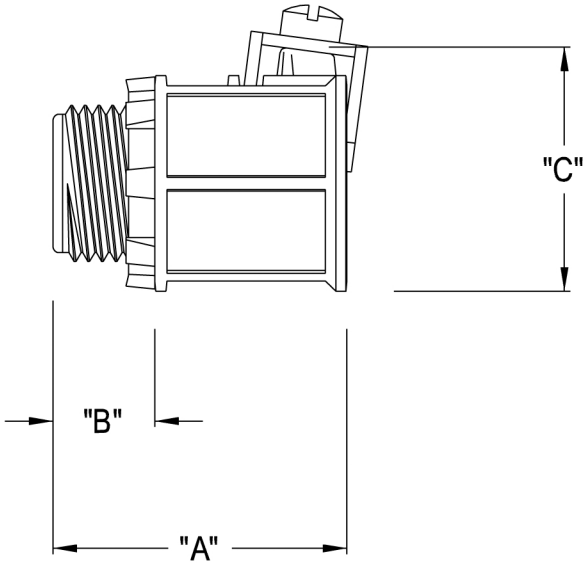


| PART No. | TRADE SIZE | "A" | "B" | "C" |
|---|---|---|---|---|
| SG75A | 3/4 | 1.466 | .481 | 1.470 |
| SG50A | 1/2 | 1.511 | .511 | 1.277 |
| SG380A | 3/8 | 1.090 | .490 | 1.077 |
| SG38A | 3/8 | 1.090 | .490 | 1.077 |