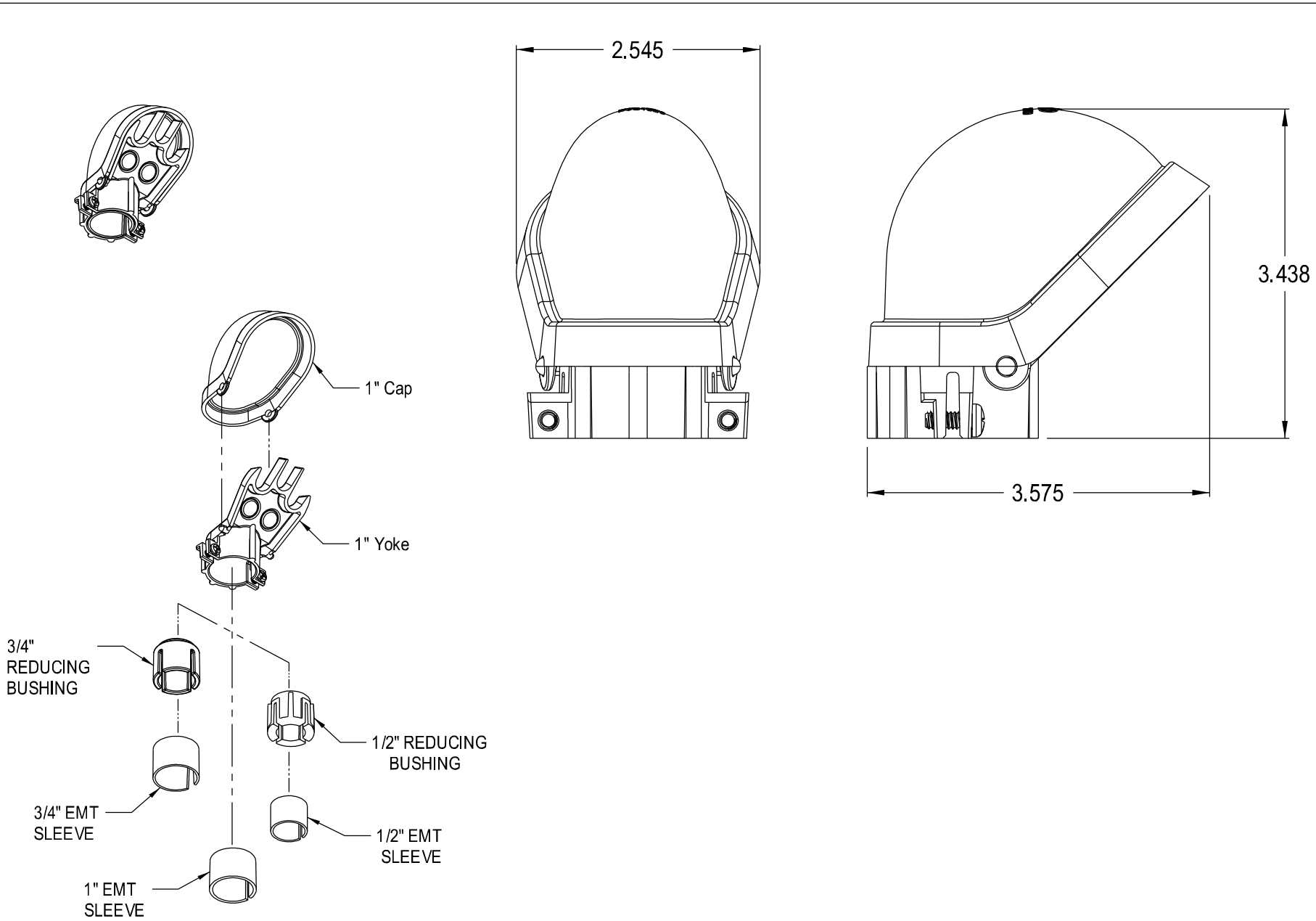
2.545
3.438
3.575
1" Cap
1" Yoke
3/4"
REDUCING
BUSHING
1/2" REDUCING
BUSHING
3/4" EMT
SLEEVE
1/2" EMT
SLEEVE
1" EMT
SLEEVE