ITEM NO.	DESCRIPTION	QTY.
1	LC CONNECTOR DUST CAP	2
2	LC DUPLEX CONNECTOR BODY	1
3	LC CONNECTOR BOOT	2
4	DUPLEX CABLE	A/R
5	SC CONNECTOR BOOT	2
6	SC DUPLEX CLIP	1
7	SC CONNECTOR BODY	2
8	SC CONNECTOR DUST CAP	2

CATALOG NO.	DESCRIPTION	LENGTH	CABLE JACKET COLOR	CONNECTOR HOUSING COLOR
DFPCLCSCSXXSM	SINGLEMODE LC–SC DUPLEX 9/125um PATCH CORD	**	YELLOW	BLUE

** AVAILABLE IN 1 METER INCREMENTS UP TO 25 FEET IN LENGTH. REPLACE 'XX' IN THE CATALOG NUMBER WITH APPROPRIATE NUMERICAL LENGTH WHEN ORDERING.

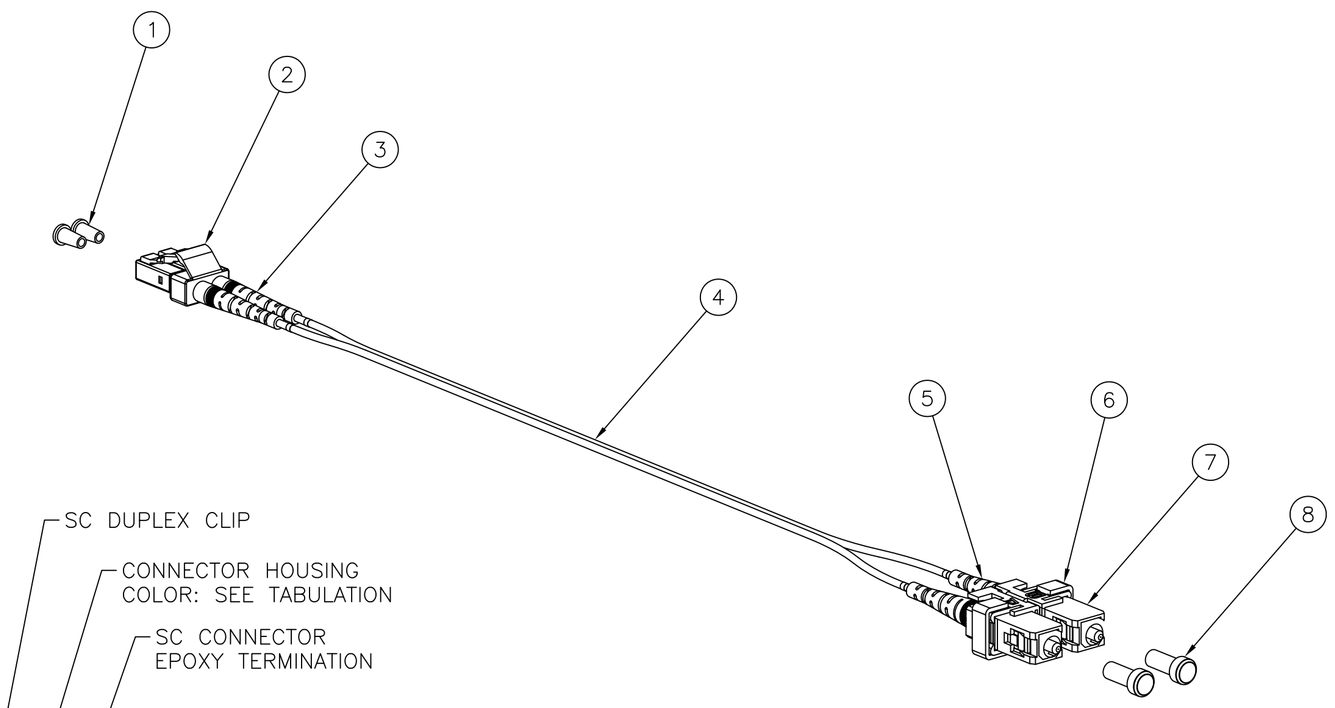

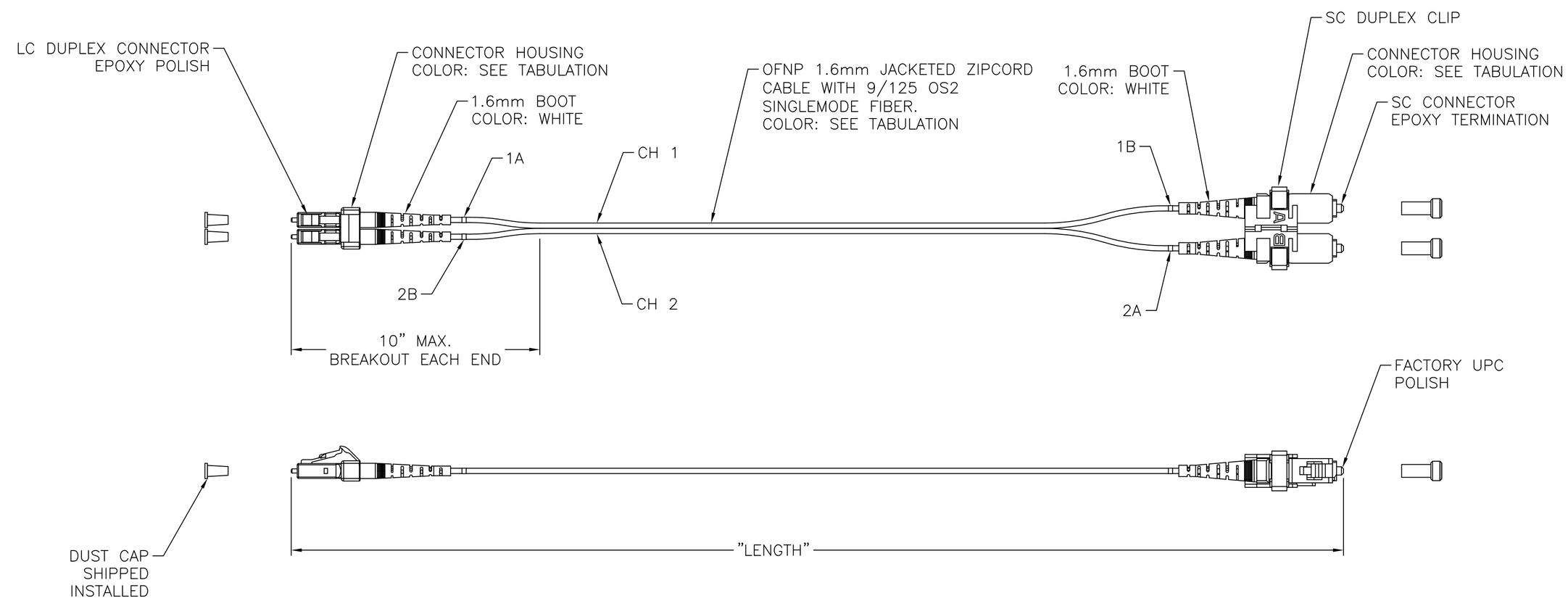

NOTES:

1. CONNECTOR OPTICAL, MECHANICAL AND ENVIRONMENTAL PERFORMANCE MEETS TIA568–C.3 SPECIFICATIONS.
2. CONNECTOR USES A UPC RADIUS TIP ZIRCONIA CERAMIC FERRULE.
3. CONNECTOR HOUSINGS ARE INJECTION MOLDED ENGINEERING PLASTIC RESIN.
4. OPTICAL INSERTION LOSS AND RETURN LOSS TEST DATA INCLUDED IN EACH BAGGED PATCH CORD.
5. CABLE MARKINGS TO IDENTIFY CHANNEL (1 OR 2) AND EACH END (A OR B).
6. SPECIFICATIONS SUBJECT TO CHANGE WITHOUT PRIOR NOTICE.

REV.	ECN	DATE	DESCRIPTION	CHG BY	APPD BY
D	18016	9/26/12	ADDED LENGTHS, UPDATED CABLE TYPE	CG	

Created on AUTOCAD

DIMENSIONING AND TOLERANCE PER ANSI Y14.5M–1982
UNLESS OTHERWISE SPECIFIED, DIMENSIONS ARE IN INCHES (MM).
TOLERANCES
.XX = ±.01 (.25)
.XXX = ±.005 (.127)
.XXXX = ±.0025 (.0635)
ANGLE TOL ±1°

IN ACCEPTING OUR DRAWINGS, BLUEPRINTS, OR SUPPORTING DOCUMENTATION FOR QUOTATION OR OTHER PURPOSES, YOU AGREE NOT TO DISCLOSE TO OTHERS THE IDEAS, INFORMATION, OR DESIGNS SHOWN HEREIN, AND THAT YOU WILL MAKE NO USE OF SAME WITHOUT PERMISSION

PROJECT REFERENCE:

MATERIAL:

DRAWN BY: PAUL S. MAGUIRE 02/25/03

CHECKED BY: CINDY TALBOT 04/25/03

APPROVED BY: CINDY TALBOT 04/25/03

Hubbell Premise Wiring
HUBBELL INCORPORATED (Delaware)
14 Lord's Hill Road, Stonington, Connecticut 06378

TITLE: FIBER PATCH CORDS ASSY, SINGLEMODE LC-SC DUPLEX 9/125

SIZE: D | DRAWING NO. 11356C | REV. D

SCALE: 1/1 | SHEET 1 OF 1