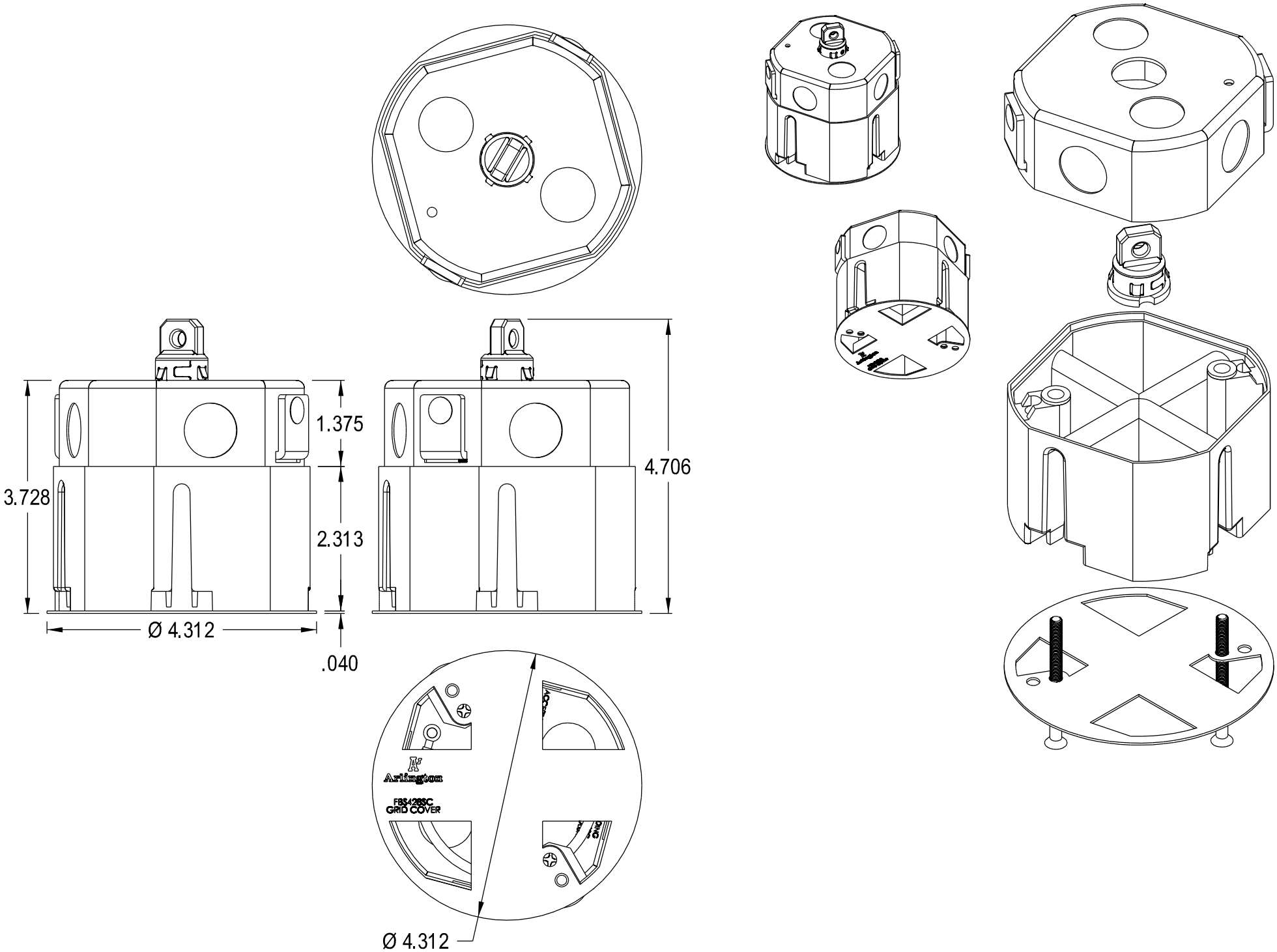
1.375
3.728
2.313
4.706
Ø 4.312
.040
Arlington
FBS428SC
GRID COVER
Ø 4.312