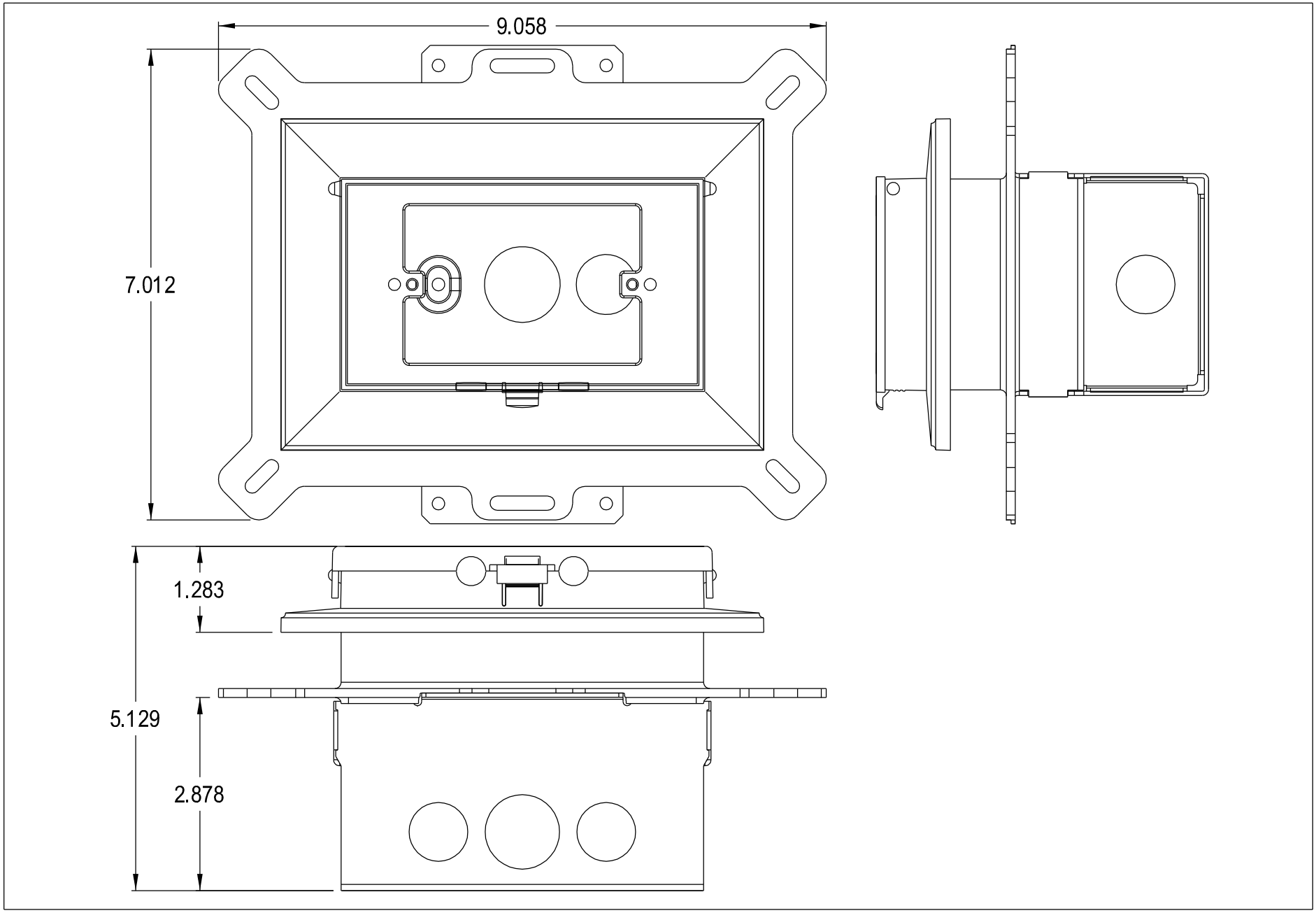
9.058
7.012
1.283
5.129
2.878