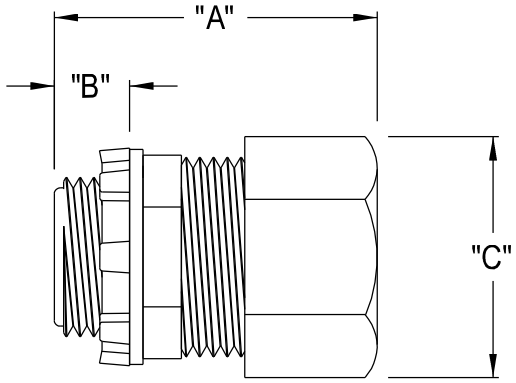

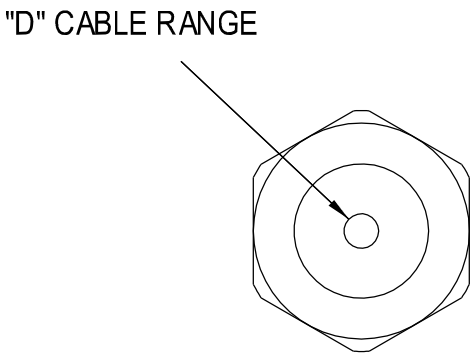

CG1001000	1"	2.150	.772	1.370	.875-1.000	PURPLE
CG100875	1"	2.150	.750	1.370	.750-.875	BLACK
CG100750	1"	2.125	.650	1.370	.625-.750	ORANGE
PART NO.	TRADE SIZE	"A"	"B"	"C"	"D" CBL RNG	COLOR