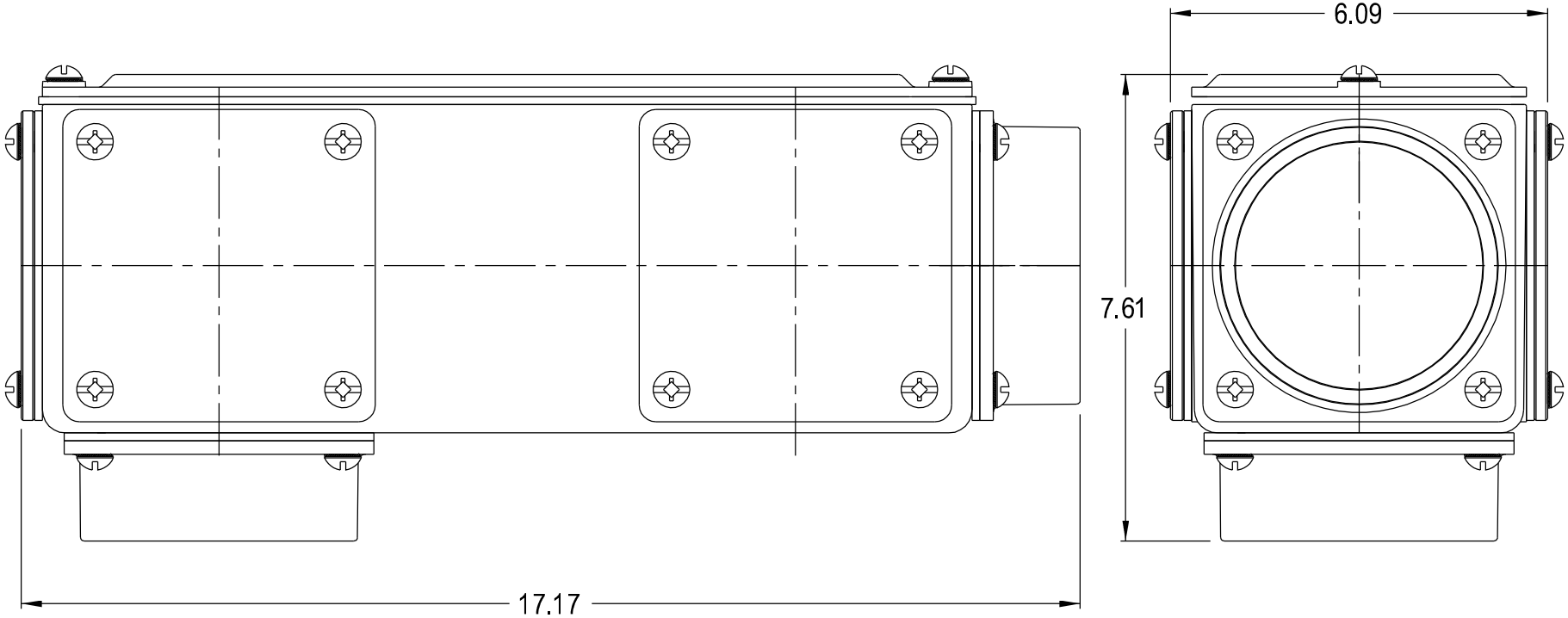
6.09
7.61
17.17