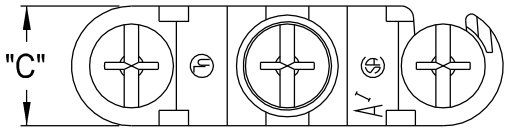

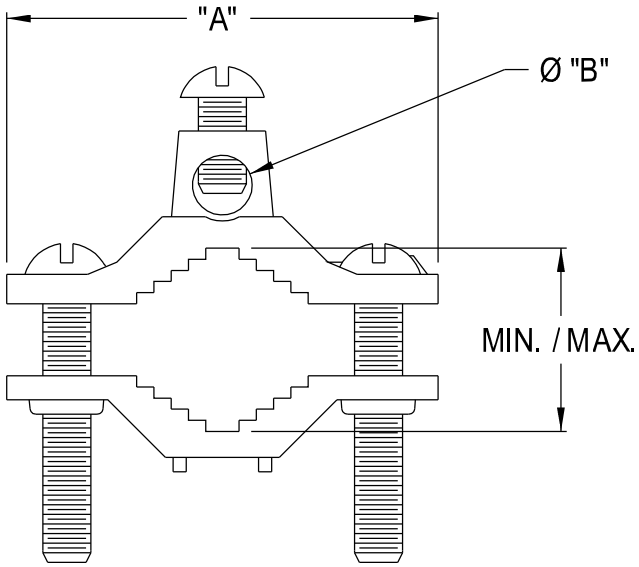

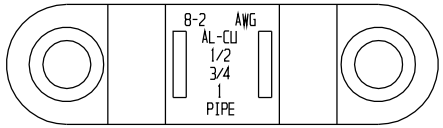

720Z	1/2"-1"	2.248	.311	.625	.545	1.575
PART NO.	PIPE SIZE	"A"	"B"	"C"	MIN.	MAX.