SECTION E

Table of Contents

Wall Switch Sensors

MAXX™ Harsh Environment Occupancy Sensors

WL-Series Wireless Sensors and Controls

Product	Page
Hubbell Energy Efficiency Solutions	
Energy Consumption and Standards Compliance	E-2
Sensing and Connection Technologies	E-3
Space Control - Wall Switch Sensors	
Adaptive Technology	E-5
Passive Infrared and Digital Timers	E-6
Ceiling, Wall and End Mount High/Low Bay Sensors	
Low Voltage and Line Voltage Ceiling Sensors	E-8
Wall Mount and OPTIMYZER® High Bay and Low Bay Sensors	E-9
Low Voltage Switches and Control Units	E-10
Daylight Harvesting and Dimming Controls	E-11
MAXX™ Harsh Environments/Extreme Temperatures Sensors	
NEMA 4X Outdoor, PIR Wall Mount Sensor	E-13
Extreme Temperature PIR Ceiling Sensor	E-13
OPTIMYZER® Watertight End Mount PIR Sensor	E-13

Product	Page
Automatic Receptacle Control Solutions	
Wired and Wireless Methodologies	E-14
Energy Codes and Standards	E-14
Wired Switched Receptacles and Control Units	E-15
Wireless Switched Receptacles and Control Units	E-15
Wireless Sensing Devices	
Wall Switches, Ceiling and Wall Mount Sensors	E-17
Distributed Control	
Room Controller, Switches and Sensing Devices	E-19
Centralized Control	
4, 8 and 16-Relay Panels	E-21
Specifications, Coverage Patterns and Wiring Schematics	E-23

Energy Consumption and Standards Compliance

Electricity consumption in commercial buildings has changed dramatically over the past decade. Energy efficient lighting sources like LEDs have reduced their contribution on a commercial building's total electricity consumption from 40% to approximately 17%. Today plug and process loads consume up to 30% of a typical commercial building's energy costs. Energy Efficiency Codes & Standards are becoming more stringent in an effort to reduce energy consumption in all areas of commercial buildings.

Hubbell Load:Logic® series of control devices offers a broad range of space, centralized and distributed controls that meet the latest codes and standards and qualify for LEED certification points. Hubbell devices feature ease of installation, setup, operation and commissioning process. The result is an "install-and-forget" experience.

Additional features include:

- Occupancy or time-based controls
- Integration with third party energy management or climate control systems
- Manual ON mode requires user operation to turn lights ON but automatically turns lights OFF when a space is unoccupied after a specified period of time
- Daylight Harvesting sensors for dimming or to keep the lights OFF when natural light is sensed
- Automatic receptacle control

Commercial Buildings Electricity Consumption

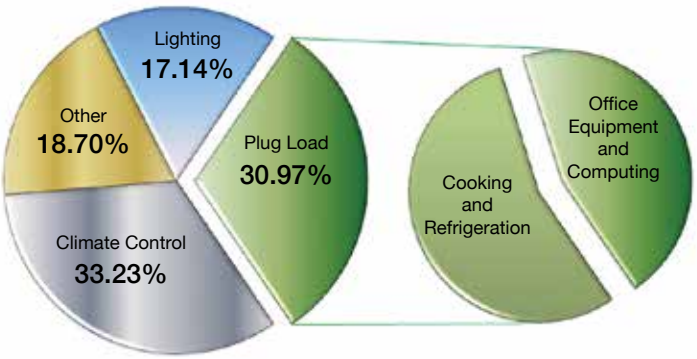

Electrical bill impact for a typical office building

Adaptive Technology Provides Better Control

Hubbell's patented breakthrough in advanced control feature smart microprocessors constantly monitoring the controlled area and adjust the sensitivity and timer based on environmental history.

- Lower energy costs and utility bills
- No need to manually adjust for occupancy changes

Backed by Hubbell Service and Support

Hubbell Energy Efficiency Solutions focuses on environmental stewardship, innovative products and efficient building operations. Hubbell also offers superior service and support with:

- Online worksheets for calculating energy savings and ROI
- Detailed online e-learning courses
- Product selection guide to assist in choosing the right technology
- Online specification assistance
- Comprehensive layout and take-off services
- Highly knowledgeable network of trained professionals and staff
- BIM models and 3D coverage patterns

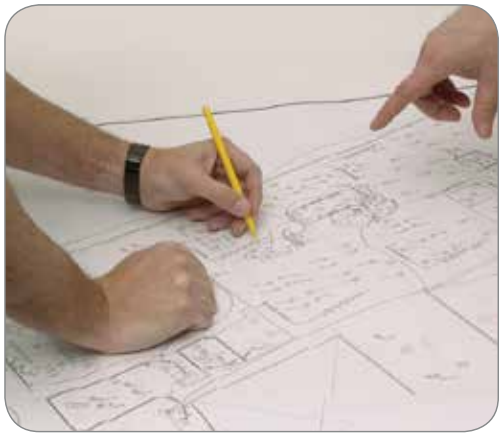

The Right Technology for the Right Application

Passive Infrared (PIR)

Requires a clear, unobstructed line of sight for detection, because it senses occupancy as movement of heat emitted from the body against the background space. A segmented Fresnel lens divides the coverage area into zones. Movement across zones is interpreted as occupancy.

Ultrasonic (US)

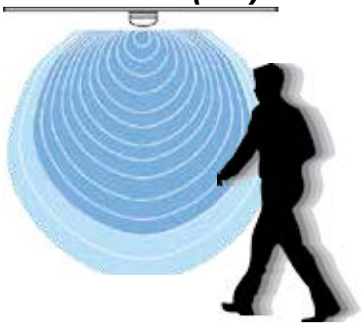

Senses occupancy by emitting an ultrasonic high-frequency sound wave (32 kHz to 45 kHz), sensing the frequency of the reflected signal, and then determining occupancy based on a change in frequency. While this has a limited range, it detects small motions and does not require a clear line of sight.

Dual Technology

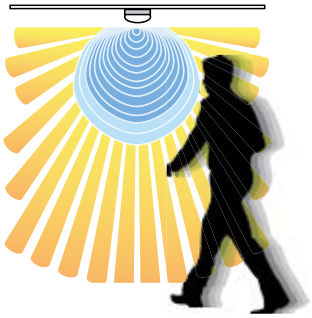

Combines PIR and US technology, minimizing the risk of lights turning ON when the space is unoccupied. Once occupancy is detected by both technologies within the space lights are turned ON, only one technology is necessary to keep the lights ON.

Wired or Wireless Sensors:

What is the right choice?
Both choices offer advantages and selecting the most suitable one is key to a successful energy control strategy.

New construction, retrofit applications, construction materials, type of space to be controlled, etc. play a role in the selection process.

Wired

Wired technology has been available for over 50 years and is traditionally used when there is no restriction for running wires. It also offers more choices of sensing technologies.

Wired technology:

- The preferred choice for new construction, as wiring can be run easily while construction is underway.
- Offers more technologies; adaptive, ultrasonic and dual.
- Easily interfaces with other technologies and control systems like wireless, building automation and HVAC.

Wired Controls' New Companion

Hubbell's WL Series wireless controls can be installed to work with Hubbell's traditional wired technology to provide an optimal solution when running extra wiring is difficult or impractical.

Wireless

The WL Series sensors are designed for ultra-low power consumption which translates into a ten year battery life. They also combine advanced Digital Signal Processing (DSP) with Passive Infrared (PIR) technology to maximize sensitivity to the movement of heat emitted from people occupying a space.

Control signals are transmitted up to 60 feet over the low interference 434MHz band to associated Clear Connect® enabled devices that automatically turn lights OFF and other non-essential loads.

Wireless technology:

- Flexible, making moves, additions and changes easy because there is no need for additional wiring.
- Fast to install and setup, typically involves replacing the existing wall switch and pairing the desired sensor.
- These controls utilize a simplified 6-second press and hold commissioning procedure. No need for remotes, computers, smartphones or any other device to set up the system.

Features and Benefits

Adaptive Dual (Ultrasonic and Passive Infrared)

Combines PIR and US technology, minimizing the risk of lights turning ON when the space is unoccupied. Once occupancy is detected by both technologies within the space lights are turned ON, only one technology is necessary to keep the lights ON.

Adaptive technology provides better control. Hubbell's patented breakthrough in advanced control feature smart microprocessors constantly monitoring the controlled area and adjust the sensitivity and timer based on environmental history.

The optimum choice when performance is paramount.

Standard Passive Infrared

Requires a clear, unobstructed line of sight for detection, because it senses occupancy as movement of heat emitted from the body against the background space. A segmented Fresnel lens divides a coverage area into zones. Movement across zones is interpreted as occupancy.

Excellent for small room control.

AD2000W1

WS2000W

Adaptive Series

Housing Design

- Steel mounting strap
- High impact molded plastics
- Color matching tamper resistant lens

Coverage and Electrical Ratings

- Dual technology - 1,000 sq. ft. Ultrasonic only - 400 sq. ft.
- 120/277V AC 50/60 Hz; no neutral required; 24V DC, 33mA
- Zero-arc point switching
- Compatible with CFL/LED and motor loads

Operation

- Selectable Auto or Manual ON operating modes
- Vacancy only version
- Dual relay version for bi-level switching or lighting/fan control applications
- Photocell for extra energy savings

WS Series

Housing Design

- Plated steel mounting strap
- High Impact molded plastics
- Recessed tamper resistant lens
- Night light option

Coverage and Electrical Ratings

- High density PIR - 1,200 sq. ft.
- WS1000 series - 120V AC 60Hz WS2000 series - 120/277V AC 60Hz; multi-way capable
- No neutral required
- Compatible with CFL/LED and motor loads

Operation

- WS2000 series - Selectable Auto or Manual ON operating modes
- Vacancy only version
- Dual relay version for bi-level switching or lighting/fan control applications
- Photocell for extra energy savings

Adaptive Technology Wall Switch Sensors

800W Incandescent/Electronic Ballast, 5A LED, 1/6 HP at 120V AC, 1800W Electronic Ballast, 5A LED , 1/6 HP at 277V AC.

Dual (Ultrasonic and Passive Infrared)

		Single Circuit		Dual Circuit	
Description	Color	1 button	Auto control with no button	2 buttons	Auto control with no button
Selectable Manual/ Auto ON.	Black	**AD2000BK1**	**AD2000BK1N**	**AD2000BK22**	**AD2000BK22N**
	Gray	**AD2000GY1**	**AD2000GY1N**	**AD2000GY22**	**AD2000GY22N**
	Ivory	**AD2000I1**	**AD2000I1N**	**AD2000I22**	**AD2000I22N**
	Light Almond	**AD2000LA1**	**AD2000LA1N**	**AD2000LA22**	**AD2000LA22N**
	White	**AD2000W1**	**AD2000W1N**	**AD2000W22**	**AD2000W22N**
Manual ON (Vacancy).	Black	**AD2001BK1**	—	**AD2001BK22**	—
	Gray	**AD2001GY1**	—	**AD2001GY22**	—
	Ivory	**AD2001I1**	—	**AD2001I22**	—
	Light Almond	**AD2001LA1**	—	**AD2001LA22**	—
	White	**AD2001W1**	—	**AD2001W22**	—

AD2000W1
AD2001W1

AD2000W1N
AD2000W22N

Ultrasonic

		Single Circuit	Dual Circuit
Description	Color	1 button	2 buttons
Selectable Manual/ Auto ON.	Black	**AU2000BK1**	**AU2000BK22**
	Gray	**AU2000GY1**	**AU2000GY22**
	Ivory	**AU2000I1**	**AU2000I22**
	Light Almond	**AU2000LA1**	**AU2000LA22**
	White	**AU2000W1**	**AU2000W22**
Manual ON (Vacancy).	Black	**AU2001BK1**	**AU2001BK22**
	Gray	**AU2001GY1**	**AU2001GY22**
	Ivory	**AU2001I1**	**AU2001I22**
	Light Almond	**AU2001LA1**	**AU2001LA22**
	White	**AU2001W1**	**AU2001W22**

AU2000W1
AU2001W1

Passive Infrared

		Single Circuit	Dual Circuit
Description	Color	1 button	2 buttons
Selectable Manual/ Auto ON.	Black	**AP2000BK1**	**AP2000BK22**
	Gray	**AP2000GY1**	**AP2000GY22**
	Ivory	**AP2000I1**	**AP2000I22**
	Light Almond	**AP2000LA1**	**AP2000LA22**
	White	**AP2000W1**	**AP2000W22**
Manual ON (Vacancy).	Black	**AP2001BK1**	**AP2001BK22**
	Gray	**AP2001GY1**	**AP2001GY22**
	Ivory	**AP2001I1**	**AP2001I22**
	Light Almond	**AP2001LA1**	**AP2001LA22**
	White	**AP2001W1**	**AP2001W22**

AP2000W1
AP2001W1

Note: Neutral wire versions, add N in front of 2000 when ordering, example: (ADN2000, AUN2000, APN2000). Wallplate sold separately. See page E-23 for technical specifications, coverage patterns and wiring schematics. Special order for Assembled in USA units. Add suffix "U" at the end of the catalog number. Consult with your local Territory Manager.

AP2000W22
AP2001W22

AD2240W1
AD2241W1

Dual (Ultrasonic and Passive Infrared)

24V DC, 33mA. Requires a CU300xx series control unit.

Description	Color	Single Circuit 1 button	Dual Circuit 2 buttons
Selectable Manual/ Auto ON.	Black	**AD2240BK1**	**AD2240BK2**
	Gray	**AD2240GY1**	**AD2240GY2**
	Ivory	**AD2240I1**	**AD2240I2**
	Light Almond	**AD2240LA1**	**AD2240LA2**
	White	**AD2240W1**	**AD2240W2**
Manual ON (Vacancy).	Black	**AD2241BK1**	**AD2241BK2**
	Gray	**AD2241GY1**	**AD2241GY2**
	Ivory	**AD2241I1**	**AD2241I2**
	Light Almond	**AD2241LA1**	**AD2241LA2**
	White	**AD2241W1**	**AD2241W2**

Note: Wallplate sold separately. See page E-23 for technical specifications, coverage patterns and wiring schematics.

WS2000W
WS1000W

WS1020NW
WS1021NW

Passive Infrared

Manual time delay adjustment.

Description	Color	Standard	with Nightlight	with Neutral	with Nightlight and Neutral
Manual adjusting; selectable manual/auto ON operation; dual-voltage 120/277V AC; multi-way capable.	Gray	**WS2000GY**	**WS2000NGY**	**—**	**—**
	Ivory	**WS2000I**	**WS2000NI**	**WS2004I**	**WS2004NI**
	Light Almond	**WS2000LA**	**WS2000NLA**	**—**	**—**
	White	**WS2000W**	**WS2000NW**	**WS2004W**	**WS2004NW**
Manual adjusting; selectable manual/auto ON operation; 120V AC only.	Ivory	**WS1000I**	**WS1000NI**	**—**	**—**
	Light Almond	**WS1000LA**	**WS1000NLA**	**—**	**—**
	White	**WS1000W**	**WS1000NW**	**—**	**—**
Manual adjusting; manual ON operation; 120V AC only.	Ivory	**WS1001I**	**WS1001NI**	**—**	**—**
	Light Almond	**WS1001LA**	**WS1001NLA**	**—**	**—**
	White	**WS1001W**	**WS1001NW**	**—**	**—**
Manual adjusting; auto ON operation; dual circuit; 120V AC only.	Gray	**WS1020GY**	**WS1020NGY**	**—**	**—**
	Ivory	**WS1020I**	**WS1020NI**	**WS1024I**	**WS1024NI**
	Light Almond	**WS1020LA**	**WS1020NLA**	**WS1024LA**	**WS1024NLA**
	White	**WS1020W**	**WS1020NW**	**WS1024W**	**WS1024NW**
Manual adjusting; manual ON operation; dual circuit; 120V AC only.	Gray	**WS1021GY**	**WS1021NGY**	**—**	**—**
	Ivory	**WS1021I**	**WS1021NI**	**WS1025I**	**WS1025NI**
	Light Almond	**WS1021LA**	**WS1021NLA**	**WS1025LA**	**WS1025NLA**
	White	**WS1021W**	**WS1021NW**	**WS1025W**	**WS1025NW**

Note: See page E-24 for technical specifications, coverage patterns and wiring schematics.

DT2000W

Digital Timer

Description	Color	Catalog Number
DIP switch enable preset intervals for 2 and 4 hours. User adjustable up to 24 hours. 3-way capable, 960W @ 120V AC and 1200W @ 277V AC.	White	**DT2000W**

DT5030W

Count Down Timers

Description	Color	30 Minutes: OFF, 5, 10, 20, 30	60 Minutes: OFF, 15, 30, 45, 60	12 Hours: OFF, 2, 4, 8, 12
1000W @ 120V AC and 1400W @ 277V AC.	Ivory	**DT5030I**	**DT5060I**	**DT5012I**
	Light Almond	**DT5030LA**	**DT5060LA**	**DT5012LA**
	White	**DT5030W**	**DT5060W**	**DT5012W**

Features and Benefits

Dual (Ultrasonic and Passive Infrared)

Combines PIR and Ultrasonic technology, minimizing the risk of lights turning ON when the space is unoccupied. Once occupancy is detected by both technologies within the space lights are turned ON, only one technology is necessary to keep the lights ON.

Adaptive technology provides better control. Hubbell's patented breakthrough in advanced control feature smart microprocessors constantly monitoring the controlled area and adjust the sensitivity and timer based on environmental history.

The absolute choice for advanced control and precise performance.

Passive Infrared

Passive infrared sensors are specifically designed for long- range major motion activity sensitivity, making them ideal for large open areas.

Various models are suitable for indoor and outdoor applications where NEMA 4X rating is required. Other units are suitable for extreme temperatures areas providing unsurpassed flexibility for almost every application.

ATD2000C

ATD1600W

Ceiling Mount

Housing Design

- High-impact, plastic (UL94, 5VA)
- 12-element segmented Fresnel lens; 32kHz ultrasonic transmitter and receiver
- Mounting base provided

Coverage and Ratings

- Up to 2,000 sq. ft. between 8ft and 12ft mounting height. 24V DC active high-logic control signal
- Option of a N/O + N/C contacts; SPDT; 500 mA rated @ 24V DC; three-wire isolated relay for HVAC or energy management systems integration

Operation

- Self adjusting sensitivity thresholds and timers; automatic false ON/ false OFF corrections, strong airflow compensation mode
- Compatible with Hubbell's distributed and centralized control systems

Wall Mount

Housing Design

- High-impact, plastic (UL94, 5VA)
- 12-element segmented Fresnel lens; 32kHz ultrasonic transmitter and receiver
- Mounting base provided

Coverage and Ratings

- Up to 1,600 sq. ft. between 8ft and 12ft mounting height. (30ft for high bay, aisle model) 24V DC active high-logic control signal
- Option of a N/O + N/C contacts; SPDT; 500 mA rated @ 24V DC; three-wire isolated relay for HVAC or energy management systems integration

Operation

- Self adjusting sensitivity thresholds and timers. Automatic false ON/false OFF corrections airflow compensation mode
- Compatible with Hubbell's distributed and centralized control systems

ATD2000C

Dual (Ultrasonic and Passive Infrared) Ceiling Sensors

Combines the excellent minor motion detection of ultrasonic with the outstanding passive infrared (PIR) long-range major motion detection.

Description	Voltage	Coverage Area 2000 sq. ft. (360°)	Coverage Area 1000 sq. ft. (180°)
Low voltage sensor with photocell and isolated relay.	24V DC	**ATD2000CRP**	**ATD1000CRP**
Low voltage sensor.	24V DC	**ATD2000C**	**—**
Line voltage sensor.	120-277V AC	**ATD2000CL**	**ATD1000CL**

Note: Low voltage ATD ceiling sensors must use a CU series control unit. See page E-10 for details.
See pages E-25 to E-28 for technical specifications, coverage patterns and wiring schematics.
For Assembled in USA units Add suffix "U"

ATD1000C

Ultrasonic Ceiling Sensors

Excellent minor motion detection.

Description	Voltage	Coverage Area 2000 sq. ft. (360°)	Coverage Area 1000 sq. ft. (180°)
Low voltage sensor with photocell and isolated relay.	24V DC	**ATU2000CRP**	**ATU1000CRP**
Low voltage sensor.	24V DC	**ATU2000C**	**—**
Line voltage sensor.	120-277V AC	**ATU2000CL**	**ATU1000CL**

Note: Low voltage ATU ceiling sensors must use a CU series control unit. See page E-10 for details.
See pages E-25 to E-28 for technical specifications, coverage patterns and wiring schematics.
For Assembled in USA units Add suffix "U"

ATU2000C

Passive Infrared Ceiling Sensors

Outstanding long range major motion detection.

Description	Voltage	Coverage Area 1500 sq. ft. (360°)
Low voltage sensor with photocell and isolated relay.	24V DC	**ATP1500CRP**
Low voltage sensor.	24V DC	**ATP1500C**
Line voltage sensor.	120-277V AC	**ATP1500CL**

Note: Low voltage ATP ceiling sensors must use a CU series control unit. See page E-10 for details.
See pages E-25 to E-28 for technical specifications, coverage patterns and wiring schematics.
For Assembled in USA units Add suffix "U"

ATU1000C

Low Profile, Line Voltage Passive Infrared Ceiling Sensors

Outstanding long range major motion detection in a compact low profile housing.

Voltage	Color	Load Rating	Coverage Area 1500 sq. ft.
120-347V AC with photocell.	White	800W Inc., 1000W Fl. @ 120V AC 1800W Fluorescent @ 277V AC 2200W Fluorescent @ 347V AC	**LVPR1500R**

ATP1500C

LVPR1500R

Ceiling Sensors Accessories

Description	Catalog Number
Ceiling sensor infrared, NEMA 4X enclosure.	**ACIPE***
Ceiling mount raceway adapter.	**ACMRA**
Ceiling mount wire guard.	**ACMG**

*Note: *Compatible with low voltage passive infrared sensors only.*

ACIPE

ACMRA

ACMG

Dual (Ultrasonic and Passive Infrared) Wall Mount Sensors

Description	Color	Coverage	Catalog Number
Low voltage sensor 32kHz with photocell and isolated relay.	Office White	1600 sq. ft.	**ATD1600WRP**

ATD1600W

Passive Infrared Wall Mount Sensors

Description	Color	Coverage	Catalog Number
Low voltage sensor with photocell and isolated relay.	Office White	1600 sq. ft.	**ATP1600WRP**
Low voltage sensor for aisle and high bay applications, with photocell and isolated relay.	Office White	120 linear feet	**ATP120HBRP**

Note: All wall mount sensors must use a CU series control units. See page E-10 for details.
See pages E-25 to E-28 for technical specifications, coverage patterns and wiring schematics.
For Assembled in USA units Add suffix "U"

ATP1600W

Wall Mount Sensors Accessories

Description	Catalog Number
Wall switch wire guard.	**AWSG**
Wall mount wire guard.	**AWMG**

AWSG

AWMG

OPTIMYZER® High Bay and Low Bay End Mount PIR Sensors

- Single and dual timer operation
- Low-profile design
- No minimum load
- Supports mounting heights up to 45 feet (High Bay)
- Supports mounting heights between 8-16 feet (Low Bay)

Description	Voltage	Catalog Number
Single relay with photocell.	120-347V AC	**HMHB219**
2 relays with photocell.	120-347V AC	**HMHB229**
1 double pole relay with photocell.	208/240V AC	**HMHB23A9**
1 double pole relay with photocell.	480V AC	**HMHB23B9**
Low voltage with photocell.	24V DC	**HMHB2LV9***

Note: 360° high bay lens included. Low bay lens options sold separately, see below for details.
**For use with CU series control units.*
See pages E-29 and E-30 for technical specifications and coverage patterns.

HMHB219

HBRL180

HBRL360

HBRLA

HBRLEA

Replacement Lenses and Accessories

Description	High Bay	Low Bay
180° Lens .	**HBRL180**	**LBRL180**
360° Lens.	**HBRL360**	**LBRL360**
Aisle lens.	**HBRLA**	**LBRLA**
End of aisle lens.	**HBRLEA**	**LBRLEA**
Mounting extension adapter.	**HMHBSA**	**HMHBSA**

HMHBSA

DSL30W1
DSM30W1

Low Voltage Switches

Single gang design, momentary or latching operation. Compatible with all Hubbell low voltage sensors and Load:Logic® Centralized and Distributed Control Systems. 100mA @ 30V DC max.

Description	Color	Catalog Number
Low voltage switch, latching, 1 button.	Ivory	**DSL30I1**
	Light Almond	**DSL30LA1**
	White	**DSL30W1**
Low voltage switch, momentary, 1 button.	Ivory	**DSM30I1**
	Light Almond	**DSM30LA1**
	White	**DSM30W1**

Note: Wallplate sold separately.

CU300ELC

Emergency Lighting Controls

20 amps, 120/277V AC, NC isolated contacts UL924 listed for emergency circuits. 0-10V dimming override.

Description	Catalog Number
Emergency lighting control unit.	**CU300ELC**
Remote test switch with engraved wallplate.	**RTPB10W**

Note: See page E-26 for technical specifications.

CU300A(M),
CU347A

Control Units

The CU300 series provides 24V DC power supply for sensors or sensor/Add-A-Relay combinations. The control units contain an internal relay for the control of an external load. Control units are plenum rated cULus Listed.

CU300HD

Description	Catalog Number
Auto ON operation, 100-277V AC, 50/60Hz for use with 1 to 4 ATD, ATU, ATP and AD2240 series sensors.	**CU300A**
Manual ON operation, 100-277V AC, 50/60Hz for use with 1 to 4 ATD, ATU, ATP and AD2240 series sensors.	**CU300M**
Auto or manual ON operation, 100-277V AC, 50/60Hz for use with 1 to 6 ATD, ATU, ATP, AHP and AD2240 series sensors, heavy duty latching relay for reactive loads and automatic receptacle control.	**CU300HD**

Note: See page E-26 for technical specifications.
For Assembled in USA units Add suffix "U".

AAR

Add-A-Relay

Hubbell AAR Add-A-Relay contains an internal relay for control of an external load. The AAR requires a 24V DC power supply from the Hubbell CU series control unit. AAR units are typically used when multiple zone control is desired or the load exceed the maximum load rating of a single control unit.

AAR20P

Description	Catalog Number
Auto ON operation, 120-277V AC, 50/60Hz. Requires a CU300 series control unit; suitable for lighting loads.	**AAR**
Auto or Manual ON operation, 100-277V AC 50/60Hz. Requires a CU300 series, heavy duty latching relay; suitable for automatic receptacle control applications.	**AAR20P**

Note: See page E-26 for technical specifications.

AAR10C277

Enclosed 10 Amp SPDT Relays

Description	Catalog Number
Enclosed relay 10 Amp SPDT with 10-30V AC/DC/120V AC coil.	**AAR10C120**
Enclosed relay 10 Amp SPDT with 10-30V AC/DC/208-277V AC coil.	**AAR10C277**

Daylight Harvesting

- Low-profile design
- Light-sensitivity wide range of options

Description	Voltage	Catalog Number
Single zone continuous automatic dimming control.	0-10V DC	**DHADC†**
Indoor photocell.	24V DC	**DHIP▲**
Outdoor photocell.	24V DC	**DHOP▲**
Atrium photocell.	24V DC	**DHAP▲**
Skylight photocell.	24V DC	**DHSP▲**
Control module.	24V DC	**DHCM**
Daylight tracker with ON/OFF control.	24V DC	**DHT***
Daylight tracker with dimming control.	0-10V DC	**DHTD†**
Indoor photocell - selectable foot candle range.	24V DC	**RCDP~**
Outdoor photocell - selectable foot candle range.	24V DC	**RCODP~**

Note: †For use with 0-10V DC dimming ballasts.
▲For use with DHCM and CU series control units.
**For use with CU series control units.*
~For use with Load:Logic Control Panel or Room Controller.

DHADC, DHIP

DHOP

DHAP, DHSP

DHCM

DHT

0-10V Adaptive Technology Wall Switch Sensor

Description	Color	Voltage	Catalog Number
Dimming PIR selectable auto ON/auto OFF manual ON/auto OFF, current sinking capacity, 30mA.	Black Gray Ivory Light Almond White	0-10V DC (Dimming) 120/277V AC	**APD2000BK1** **APD2000GY1** **APD2000I1** **APD2000LA1** **APD2000W1**
Dimming PIR manual ON/auto OFF (Vacancy) only, current sinking capacity, 30mA.	Black Gray Ivory Light Almond White	0-10V DC (Dimming) 120/277V AC	**APD2001BK1** **APD2001GY1** **APD2001I1** **APD2001LA1** **APD2001W1**

APD2000W1
APD2001W1

0-10V Dimming OPTIMYZER® High Bay and Low Bay End Mount PIR Sensors

- Supports mounting heights up to 45 feet (High Bay), between 8-16 feet (Low Bay), current sinking capacity, 30mA.

Description	Voltage	Catalog Number
Single relay with photocell.	120-347V AC	**HBS13D**
1 double pole relay with photocell.	208, 240V AC	**HBS28D**
1 double pole relay with photocell.	480V AC	**HBS48D**
Low voltage with photocell.	24V DC	**HBS24D***

Note: 360° high bay lens included. Low bay lens options sold separately, see below for details.
**For use with CU300HD control unit.*
See pages E-29 and E-30 for technical specifications and coverage patterns.

HBS13D

Replacement Lenses and Accessories

Description	High Bay	Low Bay
180° lens.	**HBRL180**	**LBRL180**
360° lens.	**HBRL360**	**LBRL360**
Aisle lens.	**HBRLA**	**LBRLA**
End of aisle lens.	**HBRLEA**	**LBRLEA**
Mounting extension adapter.	**HMHBSA**	**HMHBSA**

HBRL180

HBRL360

HBRLA

HBRLEA

Low Voltage Switches with 0-10V Dimming

Single gang design, momentary, latching or a combination operation. Compatible with Hubbell CU300 series control units and IEC60929 Annex E.2 compliant dimming ballasts/LED drivers. Ideal for single zone dimming applications.

Description	Color	Voltage	Momentary, 3 button	Latching, 3 button	1 Latching, 1 Momentary, 4 button
Low voltage switch, 0-10V dimmer, current sinking capacity, 30mA.	Gray Ivory Light Almond White	24V DC	**DSM010GY** **DSM010I** **DSM010LA** **DSM010W**	**DSL010GY** **DSL010I** **DSL010LA** **DSL010W**	**DSC010GY** **DSC010I** **DSC010LA** **DSC010W**

Note: See page E-34 for technical specifications.

DSM010I

Features and Benefits

MAXX™ Harsh Environment Occupancy Sensors

MAXX™ products are designed to withstand these harsh environments manufactured with cold and heat resistant components. These sensors tolerate extremes of weather and applications. MAXX™ products provide users with methods to reduce energy usage in harsh environments where other commercial grade products can't.

AHP1600WRP
with **HAP4**

HBSXT13

Pendant Mount

Housing Design

- IP66, NEMA 4X, outdoor rated
- Housing manufactured from chemical resistant Valox®
- Multiple mounting kits for existing work boxes and hubs; pendant or wall mounting flexibility

Protection

- Integrated lens guard protects against accidental damage
- Photocell makes sure lights stay OFF when there is sufficient daylight
- Isolated relay provides signalling to HVAC and ventilation systems

Access Cover

- Stainless steel hardware and settings access cover

Fixture Mount

Housing Design

- IP65, NEMA 3R watertight, and outdoor rated
- Fixture or work box mounting with ½" threaded nipple

Coverage and Electrical Ratings

- Digital passive infrared (PIR) sensor
- Two (upward/downward) photocells options for daylight harvesting
- Supplied with 360° lens; aisle, end-of-aisle and 180° lenses available separately
- -40°F to 149°F (-40°C to 65°C) operating temperature rangeCompatible with CFL/LED and motor loads

Valox® is a trademark of SABIC Innovative Plastics, acquired from General Electric Company.

NEMA 4X Outdoor, Passive Infrared Wall Mount Sensor

Description	Voltage	Catalog Number
PIR sensor, with isolated relay and photocell.	24V DC	**AHP1600WRP**
Adaptor plate for single gang FS boxes.	—	**HAP1**
Adaptor hub and nipple for Killark® NJ series boxes.	—	**HAP2**
Adaptor plate for Killark® NV series boxes.	—	**HAP3**
½" NPT threaded hub.	—	**HAP4**

Note: For use with CU300HD (100-277V AC, 50/60Hz) control unit.
See page E-26 for technical specifications and coverage patterns.

AHP1600WRP

Extreme Temperatures Passive Infrared Ceiling Mounted Sensor

Use ACIPE to make NEMA 4X watertight.

Description	Voltage	Catalog Number
Sensor with isolated relay and photocell.	24V DC	**AHP1500CRP**
IP66, NEMA 4X enclosure.	—	**ACIPE**

Note: For use with CU300HD (100-277V AC, 50/60Hz) control unit.
See page E-25 for technical specifications and coverage patterns.

AHP1500CRP with **ACIPE**

Heavy Duty Control Unit

The CU300 series provides 24V DC power supply for sensors or sensor/Add-A-Relay combinations. The control units contain an internal relay for the control of an external load. Control units are plenum rated cULus Listed.

Description	Catalog Number
Auto or manual ON operation, 100-277V AC, 50/60Hz for use with 1 to 6 ATD, ATU, ATP, AHP and AD2240 series sensors, heavy duty latching relay for reactive loads and automatic receptacle control.	**CU300HD**

Note: See page E-26 for technical specifications.
For Assembled in USA units Add suffix "U".

CU300HD

OPTIMYZER® Watertight High Bay and Low Bay End Mount PIR Sensors

IP65, NEMA 3R, outdoor rated, -40°F to 149°F (-40°C to 65°C) operating temperature range.

Description	Voltage	Standard	0-10V Dimming
Single relay with photocell.	120-347V AC	**HBSXT13**	**HBSXT13D**
2 relays with photocell.	120-347V AC	**HBSXT23**	—
1 double pole relay with photocell.	208, 240V AC	**HBSXT28**	**HBSXT28D**
1 double pole relay with photocell.	480V AC	**HBSXT48**	**HBSXT48D**
Low voltage with photocell.	24V DC	**HBSXT24**	**HBSXT24D**

Note: 360° high bay lens included. Low bay lens options sold separately, see below for details.
**For use with CU300HD (120/277V AC, 50/60Hz) control unit.*
See pages E-29 and E-30 for technical specifications and coverage patterns.

HBSXT13

Replacement Lenses

Description	High Bay	Low Bay
180° lens.	**HBRLXT180**	**LBRLXT180**
360° lens.	**HBRLXT360**	**LBRLXT360**
Aisle lens.	**HBRLXTA**	**LBRLXTA**
End of aisle lens.	**HBRLXTEA**	**LBRLXTEA**

HBRLXT180

HBRLXT360

HBRLXTA

HBRLXTEA

Energy Efficiency Solutions

New Codes and Standards mandates that 50% of all receptacles in private offices, open offices and computer classrooms must be automatically controlled by occupancy or time based schedules. This also includes outlets in modular furniture. Hubbell provides solutions for compliance that are cost effective and installer friendly. Find out more design resources at www.hubbell-wiring.com/energy.aspx

Wired

Utilizing low voltage wiring provides installers with a familiar method of wiring and installation. Specify Hubbell's new load control receptacle to meet this requirement. Utilize alternating outlet or split receptacle wiring as required to control at least 50% of the outlets in the space.

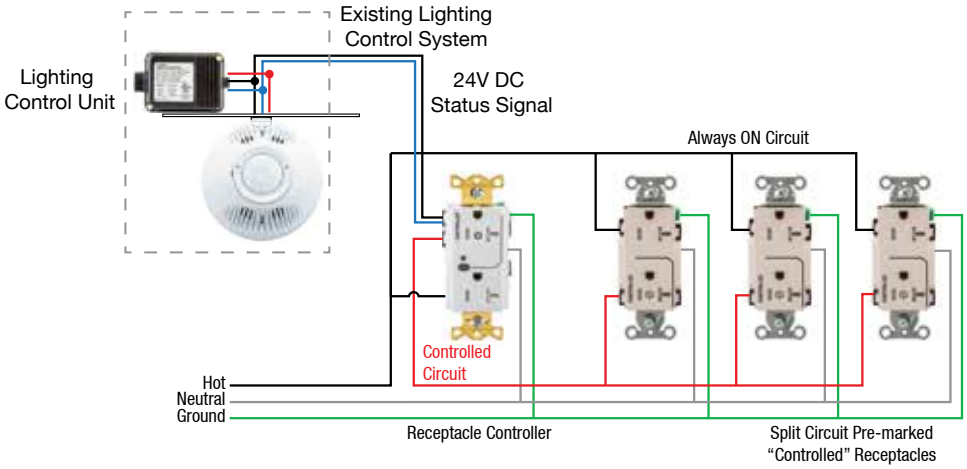

Wireless

Wireless communication takes complexity out of retrofit and difficult installations by eliminating low voltage wires running between lighting and receptacle control units. This gives installers flexibility to quickly deploy, add additional devices, and configure and re-configure the system as needed. Hubbell's WL series controls utilize Clear Connect® communication and are compatible with other Clear Connect® devices, such as Hubbell's wireless occupancy sensors.

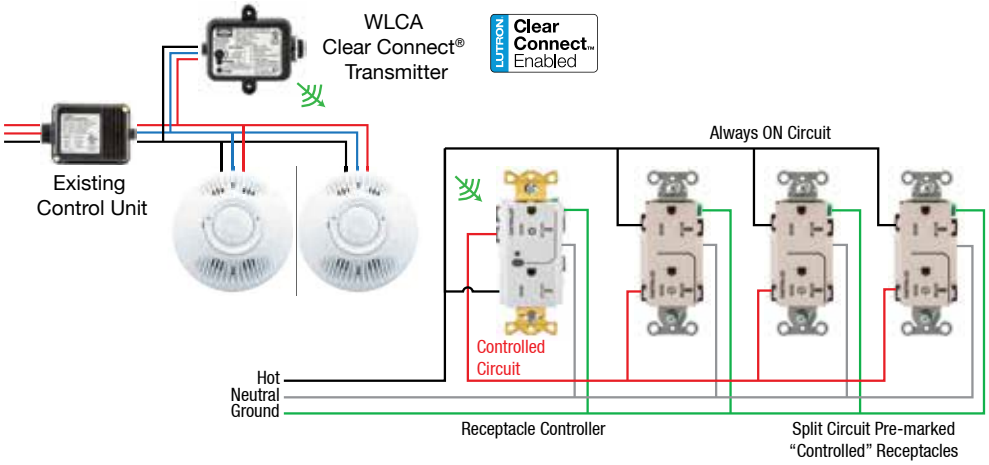

Codes and Standards

ASHRAE 90.1

ASHRAE 90.1 is the leading energy building efficiency standard for commercial buildings in North America. Section 8.4.2, ASHRAE 90.1- 2010 instituted the requirement that in certain spaces at least 50% of all receptacles are to be controlled by either time of day control device, an occupancy sensor or by an automated signal from another control or alarm system.

California Energy Commission Title 24

Section 130.5(d) of California Energy Commission Title 24, Part 6 - 2013 code requires receptacles to have automatic shutoff controls in certain spaces in all buildings.

NEC® 2017

Article 406.3(E) of the NEC® 2017 edition selected the standby ( ) symbol as the marking for a receptacle connected to an automatic control system.

Clear Connect® is a registered trademark of Lutron Electronics Co., Inc.

Wired

Switched Receptacles for Automatic Receptacle Control

Description	Color	15A Split Circuit	15A Fully Controlled	20A Split Circuit	20A Fully Controlled
Auto ON/Auto OFF control. Capable of controlling additional receptacles downstream.	Black	**HBL5262LC1BK**	**HBL5262LC2BK**	**HBL5362LC1BK**	**HBL5362LC2BK**
	Brown	**HBL5262LC1**	**HBL5262LC2**	**HBL5362LC1**	**HBL5362LC2**
	Gray	**HBL5262LC1GY**	**HBL5262LC2GY**	**HBL5362LC1GY**	**HBL5362LC2GY**
	Green	**HBL5262LC1GN**	**HBL5262LC2GN**	**HBL5362LC1GN**	**HBL5362LC2GN**
	Ivory	**HBL5262LC1I**	**HBL5262LC2I**	**HBL5362LC1I**	**HBL5362LC2I**
	Lt. Almond	**HBL5262LC1LA**	**HBL5262LC2LA**	**HBL5362LC1LA**	**HBL5362LC2LA**
	White	**HBL5262LC1W**	**HBL5262LC2W**	**HBL5362LC1W**	**HBL5362LC2W**

Note: See page E-31 for technical information. Special order for hospital grade devices.

HBL5362LC2W

Heavy Duty Control Unit

The CU300 series provides 24V DC power supply for sensors or sensor/Add-A-Relay combinations. The control units contain an internal relay for the control of an external load. Control units are plenum rated cULus Listed.

Description	Catalog Number
Auto or manual ON operation, 100-277V AC, 50/60Hz for use with 1 to 6 ATD, ATU, ATP, AHP and AD2240 series sensors, heavy duty latching relay for reactive loads and automatic receptacle control.	**CU300HD**
Auto or Manual ON operation, 100-277V AC 50/60Hz. Requires a CU300 series, heavy duty latching relay; suitable for automatic receptacle control applications.	**AAR20P**

Note: See page E-26 for technical specifications and wiring schematics.

CU300HD

Wireless

Switched Receptacles for Automatic Receptacle Control

Description	Color	15A Split Circuit	15A Fully Controlled	20A Split Circuit	20A Fully Controlled
Wireless receiver Auto ON/Auto OFF. Capable of controlling additional receptacles downstream.	Black	**HBL5262RFC1BK**	**HBL5262RFC2BK**	**HBL5362RFC1BK**	**HBL5362RFC2BK**
	Brown	**HBL5262RFC1**	**HBL5262RFC2**	**HBL5362RFC1**	**HBL5362RFC2**
	Gray	**HBL5262RFC1GY**	**HBL5262RFC2GY**	**HBL5362RFC1GY**	**HBL5362RFC2GY**
	Green	**HBL5262RFC1GN**	**HBL5262RFC2GN**	**HBL5362RFC1GN**	**HBL5362RFC2GN**
	Ivory	**HBL5262RFC1I**	**HBL5262RFC2I**	**HBL5362RFC1I**	**HBL5362RFC2I**
	Lt. Almond	**HBL5262RFC1LA**	**HBL5262RFC2LA**	**HBL5362RFC1LA**	**HBL5362RFC2LA**
	White	**HBL5262RFC1W**	**HBL5262RFC2W**	**HBL5362RFC1W**	**HBL5362RFC2W**

Note: See page E-31 for technical information. Special order for hospital grade devices.

HBL5262RFC1W

Heavy Duty Control Unit with Wireless Transmitter

Transmits an occupancy status to a wireless receiver such as a switched receptacle or a control unit. Auto or Manual ON operation. Powers up to six low voltage sensors.

Description	Voltage	Catalog Number
Heavy duty control unit with Clear Connect®.	100-277V AC	**WLCU301**

WLCU301

Heavy Duty Load Control Units with Wireless Receiver

Receive an occupancy status from a sensor or a transmitter and energize connected loads such as lighting or receptacles loads.

Description	Voltage	Catalog Number
Single (1) circuit heavy duty control unit with Clear Connect®.	100-277V AC	**WLC301**
Dual (2) circuit heavy duty control unit with Clear Connect®.	100-277V AC	**WLC302**

WLC301

Furniture Feed Box with Heavy Duty Relays and Wireless Receiver

Receive an occupancy status from a sensor or a transmitter and energize the connected receptacles loads. Mounts on an existing electrical junction box. Dual relay control excellent for office furniture partitions.

Description	Voltage	Catalog Number
Dual (2) circuit heavy duty furniture feed box with Clear Connect®.	100-277V AC	**WLC402W**

Note: See page E-32 for technical specifications and wiring schematics.

WLC402W

Clear Connect® is a registered trademark of Lutron Electronics Co., Inc.

Features and Benefits

WL-Series Wireless Sensors and Controls

Hubbell's WL-Series Wireless Sensors and Controls are the ideal solution for renovation projects aimed at reducing energy consumption. These sensors use DSP Enhanced passive infrared technology to detect movement of heat from people to turn lights ON when a room is occupied and OFF when vacant. The sensors wirelessly transmit Clear Connect® commands to the associated control devices, reducing the need for additional wiring for ease and speed of installation and energy savings.

- Eliminates need to run extra wires
- Supports highly reconfigured spaces
- Helps complete projects quickly
- Helps manage energy consumption

Clear Connect™ Enabled

WLP450C

WLS1278W

Ceiling Mount

Housing Design

- High impact, UL 94-5V plastic
- Operating temperature: 32 ℉ to 104 ℉ (0 ℃ to 40 ℃)
- Multiple ceiling-mount methods available

Passive Infrared

- Three operation modes available: Auto ON, Auto ON Low-Light and Manual ON
- Advanced digital signal processing for fine motion detection
- Lens illuminates during test mode to verify coverage

Operation

- Auto ON Low-Light feature will only turn lights ON automatically if there is less than approximately 10 Lux (1 foot candle) of ambient light
- Accessible test buttons make setup easy

Wall Switches

Housing Design

- 8A lighting, 3A fan load capacity
- LED and CFL compatible with supplied load adaptor

Technology

- Green LED provides operation and setup feedback
- Digital push button operation provides user control

Operation

- Service switch prevents lights from turning ON during re-lamping
- No neutral required, no leakage to ground

Clear Connect® is a registered trademark of Lutron Electronics Co., Inc.

Wireless Wall Switches

Description	Color	Catalog Number
8A Lighting, 3A Fan (1/10 HP motor, 120V AC only), Spec Grade Electronic Switch 120–277V AC; no neutral wire required.	Ivory White	**WLS1278I** **WLS1278W**
Accessory Switch for multi location control, 120V AC.	Ivory White	**WLAS120I** **WLAS120W**
Accessory Switch for multi location control, 277V AC.	Ivory White	**WLAS277I** **WLAS277W**

Compatible Transmitters: WLP series and WLDH sensors, or any Lutron Clear Connect enabled sensor.

WLS1278I

WLAS277W

Wireless Ceiling Mount Sensor

Description	Color	Catalog Number
Ceiling mount 360° / 324-676 sq. ft.	White	**WLP450C**

WLP450C

Wireless Wall Mount Sensor

- Detection at longer distances is best when motion occurs at right angles to the sensor
- Multiple sensors can be used to extend coverage

Description	Color	Catalog Number
Wall mount 180° / 3000 sq. ft.	White	**WLP3000W**
Corner mount 90° / 2500 sq. ft.	White	**WLP2500W**
Hallway up to 150 linear feet.	White	**WLP150H**

Compatible Controls: WSL1278xx switch, WLC316R control unit, or any Lutron Clear Connect enabled control device.

WLP150H

Wireless Status Transmitter

Works with dual technology low voltage occupancy sensors or low voltage time based systems to transmit an occupancy signal to a receiver unit such as a wireless switched receptacle. It does not require batteries to operate.

Description	Voltage	Catalog Number
Wireless transmitter with Clear Connect®.	24V DC	**WLCA**

WLCA

Wireless Control Unit

Description	Catalog Number
Wireless load control unit with isolated relay, 16A, 120V AC or 277V AC.	**WLC316R**

Compatible Transmitters: WLP series and WLDH sensors, or any Lutron Clear Connect enabled sensor.

WLC316R

Wireless Daylight Sensor

Description	Color	Catalog Number
Daylight sensor 0–107,000 Lux (0-10,000 foot candles).	White	**WLDH**

Compatible Controls: WSL1278xx switch, WLC316R control unit, or any Lutron Clear Connect enabled control device.
Note: See pages E-32 to E-35 for technical specifications, coverage patterns and wiring schematics.

WLDH

Clear Connect® is a registered trademark of Lutron Electronics Co., Inc.

Energy Efficiency Solutions

Trends in energy efficiency for commercial buildings are making a nationwide impact not only on energy savings but also in customer personal preferences. Smart devices applications are making possible individualized customization of the work environment and other spaces.

Hubbell Wiring Device-Kellems puts forward solutions that are cost efficient while meeting or exceeding current energy efficiency codes and standards. Whether there is a requirement for localized, central or distributed control, Hubbell Wiring Device-Kellems comprehensive offering encompass solutions for each of these control architectures.

Space Control	Distributed Control	Centralized Control
Localized control flexibility. Based on standalone devices like occupancy sensors or time switches. Ideal for small building with few individual spaces. Operations like vacancy, dimming, pre-set light levels, automatic receptacle control, daylight harvesting, etc, are coordinated via control traditional wiring between devices. Devices need to be configured individually. No networking capability. When wired appropriately meet most of the current Energy Efficiency Codes and Standards.	Advanced control flexibility. Controllers are distributed throughout the floor/building. Although there can be a centralized control, distributed control systems are autonomous to perform individual control functions. Coordinated operations like vacancy, dimming, pre-set light levels, automatic receptacle control, daylight harvesting, etc. are embedded on the devices. Pre-terminated wiring. Reduces the amount of wiring errors. Full networking capability. Addressable controllers and devices are self-configured or configured via a smart device application. Meet or exceed the current and future Energy Efficiency Codes and Standards.	Superior control flexibility. Control located at a central location with the option of a remote device located at a separate location but subjected to the primary control. Coordinated operations like vacancy, dimming, pre-set light levels, automatic receptacle control, daylight harvesting, etc. are embedded on the devices. A mix of traditional and pre-terminated wiring exists. Devices need to be configured at the central location. Meet or exceed the current Energy Efficiency Codes and Standards.

The Load:Logic Room Controller integrates automatic and manual control of lighting with the simplicity of plug-in installation and auto-configuration. Devices such as digital wall switches, vacancy/occupancy and daylight sensors are connected to the room controller by means of RJ45 connections reducing wiring errors. Comprehensive configuration of dimming, daylight and color tuning functions can be accomplished with the use of a Bluetooth® communication interface and free app available for both Android and iOS® devices. All of these features meet or exceed the current energy codes and standards resulting in an efficient and trouble-free installation.

Room Controller

Description	Catalog Number
2 Relays, 2 dimming channels, 120/277V AC.	**LLC2RD**
2 Relays, no dimming, 120/277V AC .	**LLC2R**

Note: See page E-36 for technical specifications and wiring schematics.

Interface Card and Modules

Description	Catalog Number
Bluetooth® module.	**RCBTM**
Dry contact input interface.	**RCDISP**
NC/NO output interface.	**RCSPOR**
3-Way bridging adapter (connects 2 devices sharing a signal).	**BR241444**
RJ45 adapter for non native RJ45 devices (10-pack).	**HBLRJ45A10**
Wireless transmitter.	**WLCA**

Switches with Pilot Light

Color	1 button	2 button	3 button	4 button	6 button
Black	**RCS1BK**	**RCS2BK**	**RCS3BK**	**RCS4BK**	**RCS6BK**
Gray	**RCS1GY**	**RCS2GY**	**RCS3GY**	**RCS4GY**	**RCS6GY**
Ivory	**RCS1I**	**RCS2I**	**RCS3I**	**RCS4I**	**RCS6I**
Light Almond	**RCS1LA**	**RCS2LA**	**RCS3LA**	**RCS4LA**	**RCS6LA**
White	**RCS1W**	**RCS2W**	**RCS3W**	**RCS4W**	**RCS6W**

Specialty Switches

Color	4 button, no pilot light, ON/Raise/Lower/OFF	6 button, with pilot light, Scene	2 button, no pilot light, Raise/Lower	1 button, with pilot light, Time to ON	2 button, no pilot light, ON/OFF
Black	**RCSNRLFBK**	**RCSSCBK**	**RCSRLBK**	**RCSTOBK**	**RCSNFBK**
Gray	**RCSNRLFGY**	**RCSSCGY**	**RCSRLGY**	**RCSTOGY**	**RCSNFGY**
Ivory	**RCSNRLFI**	**RCSSCI**	**RCSRLI**	**RCSTOI**	**RCSNFI**
Light Almond	**RCSNRLFLA**	**RCSSCLA**	**RCSRLLA**	**RCSTOLA**	**RCSNFLA**
White	**RCSNRLFW**	**RCSSCW**	**RCSRLW**	**RCSTOW**	**RCSNFW**

Sensing Devices

Description	Catalog Number
Daylight Sensor, Indoor.	**RCDP**
Daylight Sensor, Outdoor.	**RCODP**
Dual Technology Ceiling Sensor, 2,000 sq.ft.	**ATD2000C***
Switched Receptacle, Split Controlled, 20A, White.	**HBL5362LC1W***
Switched Receptacle, Full Controlled, 20A, White.	**HBL5362LC2W***

*Note: *Requires (1) HBLRJ45A10.*

UTP Cat. 5e Patch Cords, Plenum, No Boot

Size	Color	Catalog Number
3 ft.	Yellow	**NSC5EY03PNB**
10 ft.	Yellow	**NSC5EY10PNB**
15 ft.	Yellow	**NSC5EY15PNB**
25 ft.	Yellow	**NSC5EY25PNB**
50 ft.	Yellow	**NSC5EY50PNB**
100 ft.	Yellow	**NSC5EY100PNB**

Features and Benefits

Centralized Control - Load:Logic® Control Panels

These control panels feature a broad set of programming capabilities allowing for manual or scheduled control of up to 48 loads. Designed to be a cost effective solution for compliance with the latest energy codes and standards, the panel offers maximum flexibility to a wide range of small to medium commercial and institutional applications.

The commissioning process is achieved via simple and intuitive scrolling menus. To program, check status or updates, pre-programmed scenarios that can be saved and exported in a portable document file (PDF) format.

- Time based or occupancy based control capabilities
- Same form factor, 1-pole or 2-pole, single input smart relay cards
- Configurable auxiliary contact inputs and outputs
- 0-10V dimming card with demand response capability
- Automatic Receptacle Control capability
- Compatible with Hubbell occupancy sensors and low voltage switches

Load:Logic® 8-Relay Panel Interior

Auxiliary Inputs

Dry Contact Outputs

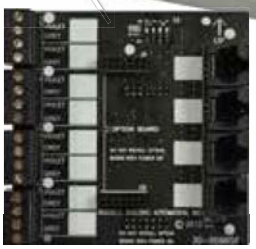

Dimming Card

Master/Secondary Card

Individual Mounted Relay Card

Load:Logic® Energy Efficiency Panels, Relays and Accessories

4 and 8-Relay Panels

	4-Relay	8-Relay	
Description	Stand Alone	*Master*	*Secondary*
Relay panel with space for field installation, 120/208/240/277V AC.	**CP042RRR3**	**CP082RRR1**	**CP082RRR2**

16 and 24-Relay Panels

	16-Relay		24-Relay	
Description	Master	Secondary	Master	Secondary
Relay panel with space for field installation, 120/277V AC.	**CP162RRR1**	**CP162RRR2**	**CP242RRR1**	**CP242RRR2**
Relay panel with space for field installation, 480V AC.	**CP163RRR1**	**CP163RRR2**	**CP243RRR1**	**CP243RRR2**

R21HN
20A/1P 14K SCCR

Field Installed Relay Cards

Description	Catalog Number
20A 1-Pole Electrically Held N/O 120-277V.	**R21HN**
30A 1-Pole Latching 120-277-347V.	**R31LX**
20A 2-Pole Electrically Held N/O 480V.	**R202HN**
20A 2-Pole Electrically Held N/C 480V.	**R202HC**

R31LX
30A/1P 18K SCCR

R202HN, R202HC
20A/2P 14K SCCR

Dimming Load:Logic Interface Card

- Full range dimming with preset dimming levels
- RJ45 connection ports for dimming switches
- Operates with 0-10V dimmable ballasts
- Max. Dim Level (Demand Response System Settings)
- Upgrade option to existing and new Load:Logic Panels
- Provides manual and automatic control of dimming levels

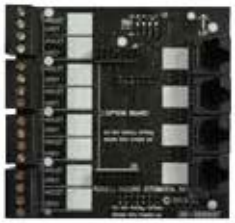

Interface Cards

Description	Catalog Number
8-channel dimming contoller option board.	**CPDM8CTRB**

CPSD4W
(Shown with labels)

Dimming Switches (Compatible with Hubbell Wiring Device Load Control Panels)

Description	Color	1 button	2 button	3 button	4 button	6 button*
Load control panel, low voltage dimming switches.	Black	**CPSD1BK**	**CPSD2BK**	**CPSD3BK**	**CPSD4BK**	**CPSD6BK**
	Gray	**CPSD1GY**	**CPSD2GY**	**CPSD3GY**	**CPSD4GY**	**CPSD6GY**
	Ivory	**CPSD1I**	**CPSD2I**	**CPSD3I**	**CPSD4I**	**CPSD6I**
	Light Almond	**CPSD1LA**	**CPSD2LA**	**CPSD3LA**	**CPSD4LA**	**CPSD6LA**
	White	**CPSD1W**	**CPSD2W**	**CPSD3W**	**CPSD4W**	**CPSD6W**

Note: Compatible with Load:Logic Control Panels equipped with dimming controller card ONLY.
Configurable for a variety of button functions. Function specific button caps supplied with units.
Use standard decorator wallplates (order separately).
**Special order only.*

Load:Logic® Energy Efficiency Panels, Relays and Accessories

Low Voltage Switches

Description	Color	1 button with LED pilot light	2 button	2 button with LED pilot light	4 button with LED pilot light
Low voltage switch, momentary.	Ivory	**DSM30I1P**	**DSM30I2**	**DSM30I2P**	**DSM30I4P**
	Light Almond	**DSM30LA1P**	**DSM30LA2**	**DSM30LA2P**	**DSM30LA4P**
	White	**DSM30W1P**	**DSM30W2**	**DSM30W2P**	**DSM30W4P**

Replacement Parts

Description	Catalog Number
Transformer, 120/208/240/277V AC to 24V AC, 4 and 8-relay panel.	**CPTFMR27**
Transformer, 120-277V AC to 24V AC, 16-24 relay panel.	**CPTFMR12**
Transformer, 347-480V AC to 24V AC, 16-24 relay panel.	**CPTFMR48**
Panel replacement motherboard for 4-relay panel.	**CPMBRD04**
Panel replacement motherboard for 8-relay panel.	**CPMBRD08**
Panel replacement motherboard for 16-24 relay panel (8-relays).	**CPMBRD16**
Master controller, replacement kit.	**CPMCTRRKT**
Secondary interface, replacement kit.	**CPSINTRKT**

Load:Logic® Configuration Software

The optional configuration software allows commissioning of the Load:Logic® Control Panel using a personal computer to create a program file. Once the file is completed, it is then copied to an SD memory card and uploaded to the panel. The Master Panel has an SD Card slot on the left side of the User Interface that allows for this upload. Additionally, the program file can be downloaded to an SD Card and then opened on a personal computer. The software also allow for a portable document file (pdf) output of the panel configuration parameters that can be submitted as project documentation. The program is available as a free download at www.hubbell-wiring.com.

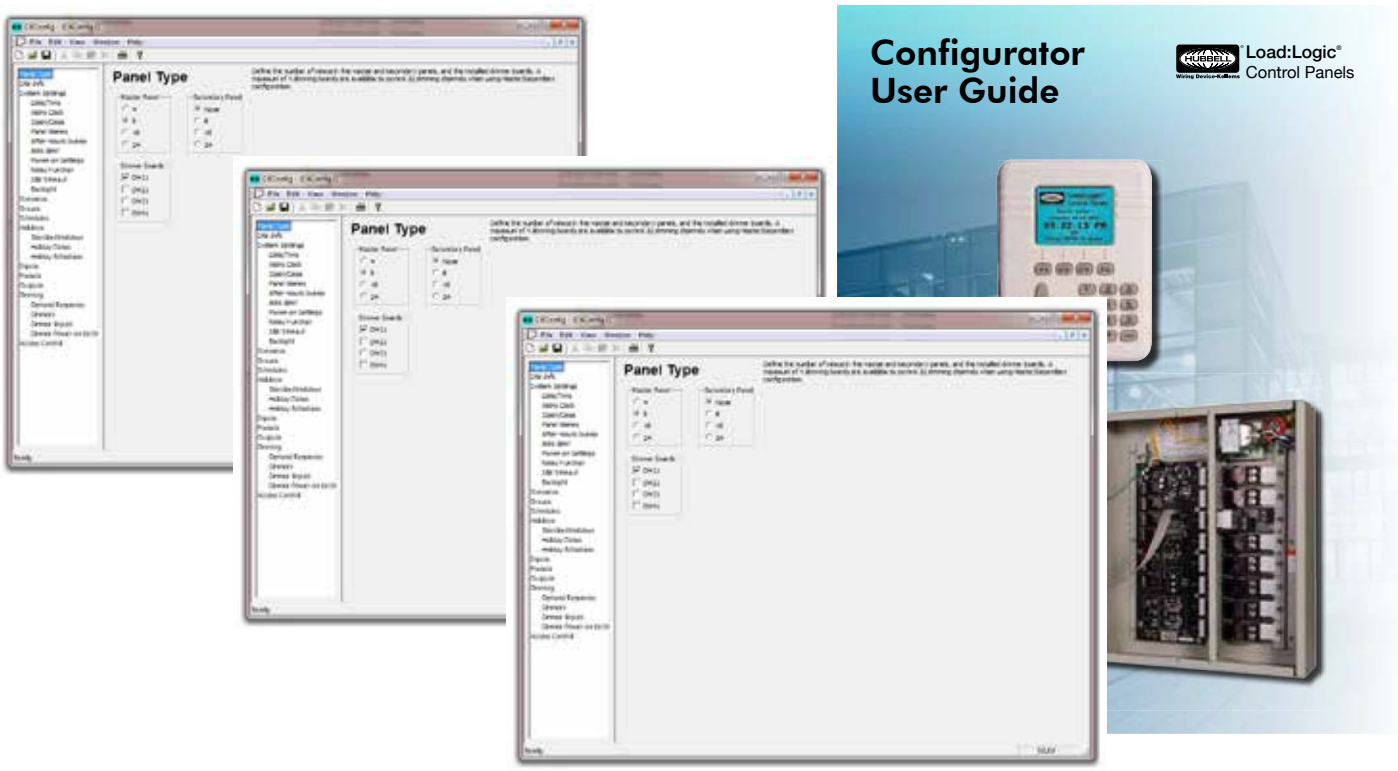

Adaptive Technology Wall Switch Sensors

Electrical	AD2000, APD2000, AP2000 and AU2000 Series
Power Supply	120/277V AC, 50/60Hz
Load Capacity	
120V AC	800W Incandescent, 1000W Electronic Ballast, 5A LED
277V AC	1800W Electronic Ballast, 5A LED
Motor Load	1/6HP
Power Requirements	24V DC nominal, 33mA from Hubbell CU series control unit (AD2240 Series)
Agency Approvals	UL and cUL Listed
Physical	
Housing	High impact plastic (UL 94-5V)
Lens	Dual element pyrometer and 12 element cylindrical hard lens (AP2000 only)
Dimensions	Face 2.57"H x 1.71"W, 0.53"D (from wall out)
Mounting Height	42 to 54 inches above floor
Environmental	
Operating	32° F to 104°F (0°C to 40°C); 0% to 95% non-condensing relative humidity
Controls	
Time Delay	Digital, adaptive 4 to 30 minutes, 20 minutes default
Ambient Light	Adjustable ambient light override, 10 to 500 foot candles
Front Press Switch	Auto/OFF
Sensitivity	Adaptive 0% to 100%
Service Switch	Air gap OFF
Dimming	0-10V, Sink up to 30mA (APD2000 series only)
Sensing Indicator	
Passive Infrared	Red LED (AD & AP series only)
Ultrasonic	Green LED (AD & AU series only)

Wall Switches Coverage Patterns

Minor Motion: Ultrasonic PIR
Major Motion: Ultrasonic PIR

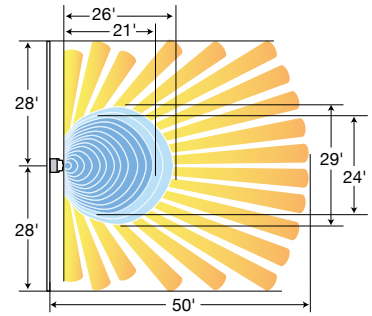

AD2000 Series

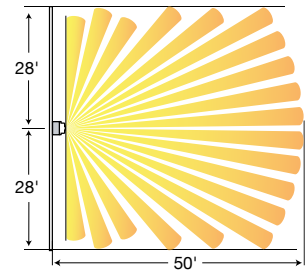

AP2000 Series

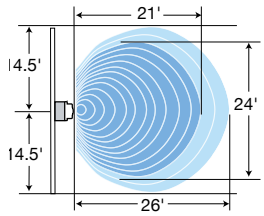

AU2000 Series

Wiring Schematic AD, AU, AP, 2000 Series Wall Switch Sensors

Single Circuit Wiring

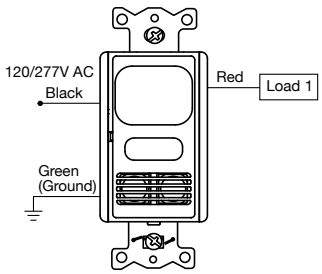

Two Circuit Sensor, Wired for Two Loads

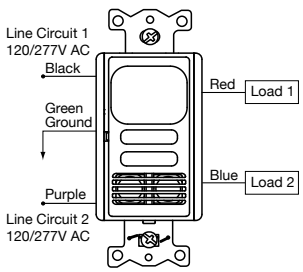

Wall Switch Sensors with Neutral Wires

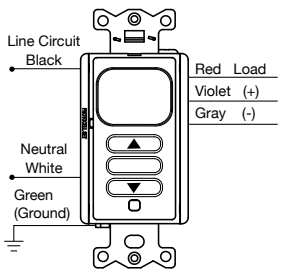

Single Circuit Sensors, Wired as 3-Way Sensors*

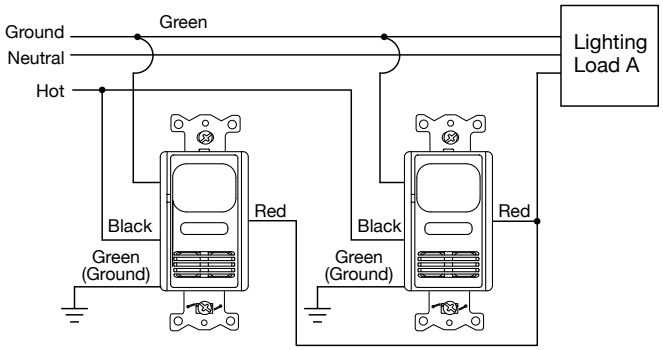

Low Voltage Wall Switch Sensors*

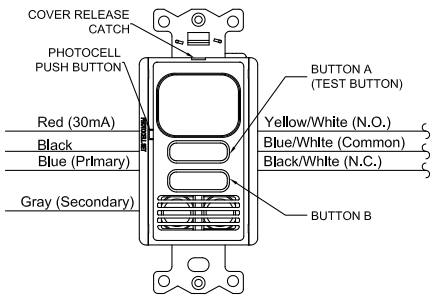

*Note: *Load can not exceed the rating of one switch.*
Sensor is shipped with all DIP switches in the OFF position (factory default).

Adaptive Technology PIR Wall Switches WS2000, WS1000 and WS1020 Series

Electrical	WS2000 Series	WS1000/WS1020 Series
Power Supply	120/277V AC, 60Hz	120V AC, 60Hz
Load Capacity		
Incandescent	1000 watts	5A/600 watts
120V Ballast, CFL, LED	1000 watts, 1/6HP	5A/600 watts, 1/6HP
277V Ballast, CFL, LED	1800 watts	N/A
Agency Approvals	cULus Listed	cULus Listed
Warranty	5 years	5 years
Physical		
Housing	Flame retardant UL 94 V-0 ABS	
Lens	Polyethylene	
Dimensions	Face 2.59"H x 1.30"W, 0.61"D (from wall out)	
Mounting Height	42 to 54 inches above floor	
Environmental		
Operating	32°F to 122°F (0°C to 50°C) with rate of change not exceeding 20°F (11°C) per hour; 20% to 90% non-condensing relative humidity	
Storage	-40°F to 150°F (-40°C to 65°C); 20% to 90% non-condensing relative humidity	
Controls	**WS1000/WS2000 Series**	**WS1001/WS1020 Series**
Time Delay	Manual 6 seconds to 20 minutes	
Ambient Light	Digital, pushbutton, 10 to 500 foot candles	N/A
Front Press Switch	ON/OFF	ON/OFF
Service Switch	OFF (service) Vac (manual ON) Occ (auto ON)	OFF (service) ON (service)
Sensing Indicator		
Passive Infrared	Red LED	

Wall Switches Coverage Patterns

Minor Motion: PIR **Major Motion:** PIR

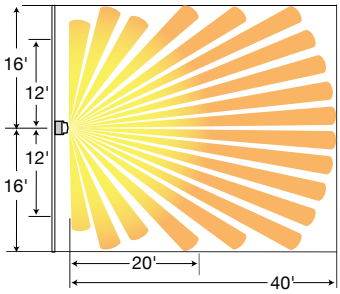

WS2000, WS1000 and WS1020 Series

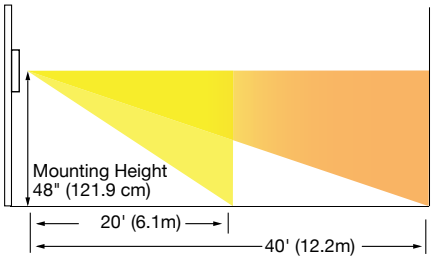

Vertical Coverage
WS2000, WS1000 and WS1020 Series

Wiring Schematic WS2000, WS1000 and WS1020 Series Wall Switches

WS2000 Series Wall Switch Sensors

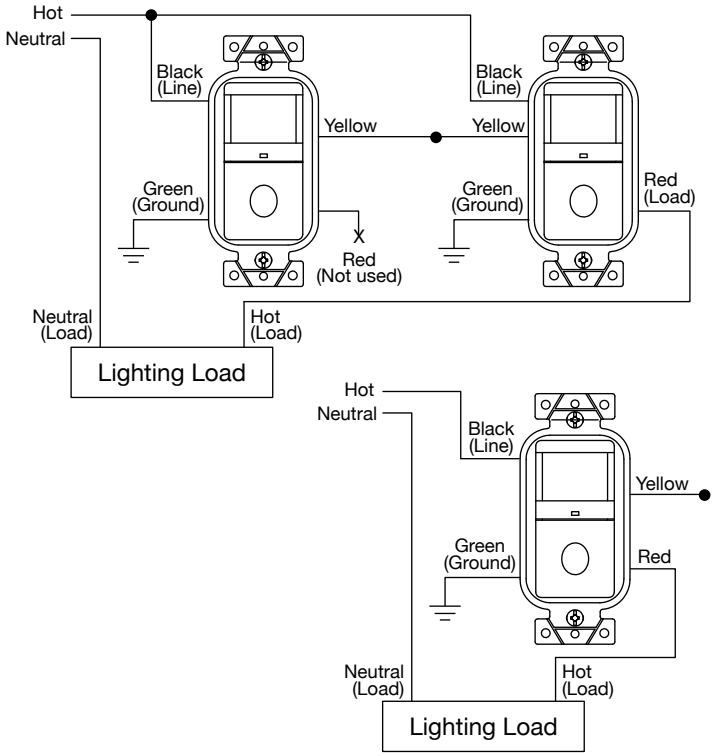

WS1020 Series Wall Switch Sensors

Dual Circuit Sensor, Wired for Dual Circuits

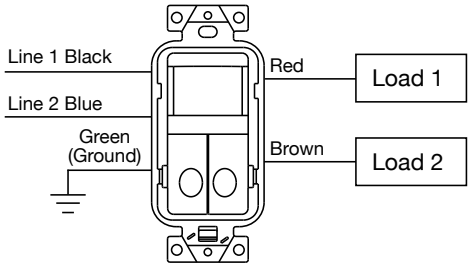

Adaptive Dual Technology, Ultrasonic and Passive Infrared Ceiling and Wall Mount Sensors ATD, ATU, AHP and ATP Series

Electrical		
Power Requirements	24V DC nominal, 33mA from Hubbell CU series control unit	
Isolated Relay (sensors with RP suffix)	Relay: N/O + N/C contacts; 500mA rated @ 24V DC; 3-wire isolated relay	
Agency Approvals	UL and cUL Listed	
Physical	**Ceiling Sensors**	**Wall Mount Sensors**
Housing	Flame retardant UL 94 V-0 ABS	Flame retardant UL 94 V-0 ABS
Protection	NEMA 4X, when used with ACIPE	NEMA 4X, IP66, outdoor use rated (AHP only)
Lens	Polyethylene	Polyethylene
Dimensions	1.5"H x 4.5"Diameter	6"H x 2"W x 1.5"D
Color	Office white	Office white; Gray (AHP series)
Mounting Height	8 to 12 feet	8 to 12 feet, 8 to 30 feet (ATP120HB series)
Environmental		
Operating	32°F to 104°F (0°C to 40°C) with rate of change not exceeding 20°F (11°C) per hour; 0% to 95% non-condensing relative humidity	
	-40°F to 149°F (-40°C to 65°C) with rate of change not exceeding 20°F (11°C) per hour; 0% to 95% non-condensing relative humidity (AHP series)	
Storage	-20°F to 150°F (-29°C to 65°C); 0% to 95% non-condensing relative humidity	
Controls		
Time Delay	Test (8 seconds), adaptive 8 to 40 minutes	
Ambient Light	1 to 1000 foot candles	
Sensitivity	Adaptive 0 to 100%	
Sensing Indicators		
Ultrasonic (ATD and ATU Series)	Green LED	
Passive Infrared (ATD, AHP and ATP Series)	Red LED	

Ceiling Sensors Coverage Patterns

Minor Motion: Ultrasonic PIR **Major Motion:** Ultrasonic PIR

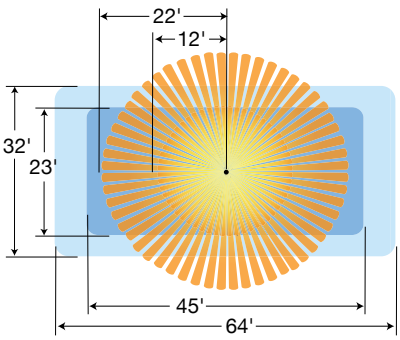

ATD2000C Series

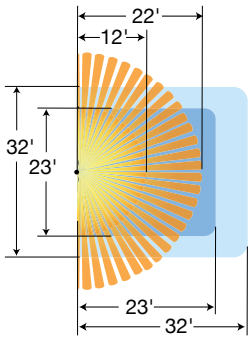

ATD1000C Series

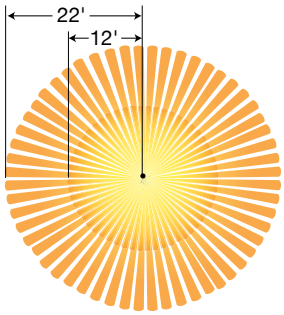

ATP1500C Series
AHP1500CRP Series

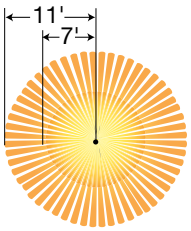

ATP600C Series

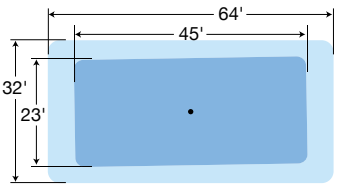

ATU2000C Series

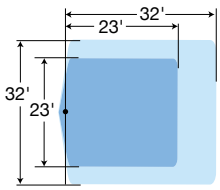

ATU1000C Series

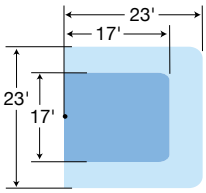

ATU500C Series

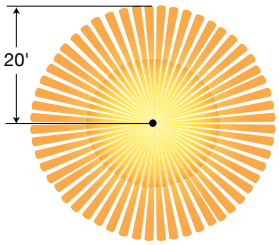

LVPR1500R(P)

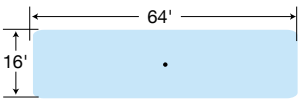

ATU2000C Series
Hallway Application

Wall Mount Sensors Coverage Patterns

Minor Motion: Ultrasonic PIR **Major Motion:** Ultrasonic PIR

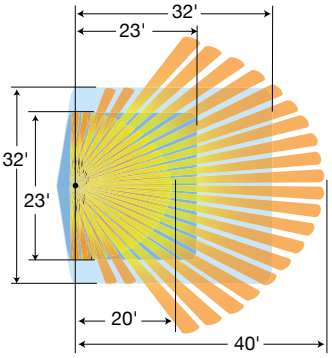

ATD1600W Series

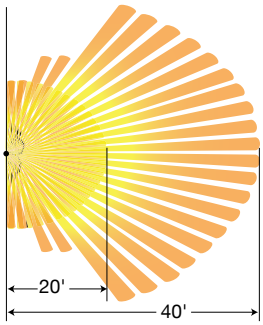

ATP1600W Series
AHP1600WRP Series

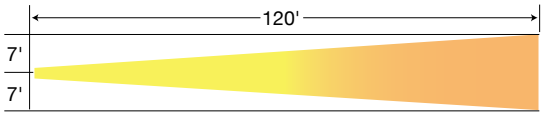

ATP120HB Series
Top View

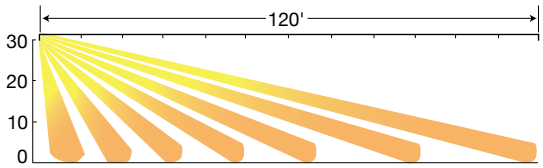

Side View

Control Units - CU300A or CU300M and CU300HD Series

Electrical	CU300A or CU300M	CU300ELC	CU300HD
Power Supply	100-277V AC, 50/60Hz	100-277V AC	100-277V AC, 50/60Hz
Power Output	24V DC, 150mA	N/A	24V DC, 250mA
Load Capacity	16A, 8A LED	16A	20A
Motor Loads			
	1HP	1HP	1HP @ 120V 2HP @ 240/277V
AT Sensor/AAR Capacity	1 to 4 combined		1 to 6 combined
Agency Approvals	UL and cUL Listed	cULus Listed	cULus Listed
Physical			
Housing	Flame retardant UL94-5VA thermoplastic	Flame retardant UL94-5VA thermoplastic	
Dimensions	3.69"L x 2.33"W x 1.36"H	4.00"L x 3.4"W x 1.73"H	
Color	Black	Black	
Environmental			
Operating	32°F to 104°F (0°C to 40°C); 0% to 90% non-condensing relative humidity		-40°F to 149°F (-40°C to 65°C). Below 32°F (0°C) must use suitably rated non-metallic enclosure. 0% to 90% humidity, non-condensing
Storage	-20°F to 150°F (-29°C to 65°C); 0% to 90% non-condensing relative humidity		

Add-A-Relay Control Units

Electrical	AAR	AAR20P
Power Input	24V DC nominal, 33mA from Hubbell CU series control unit	24V DC nominal, 50mA from Hubbell CU300HD series control unit
Load Capacity	16A, 120/277V AC, 8A LED	20A, 100-277V AC
Motor Loads	1800 watts	Motor Loads
1HP @ 120V	2400 watts	1HP @ 120V
2HP @ 240/277V	2400 watts	2HP @ 240/277V
Operation Mode	Auto ON/Auto OFF	Selectable Auto ON/Auto OFF or Manual ON/Auto OFF
Agency Approvals	UL and cUL Listed	cULus Listed
Physical		
Housing	Flame retardant UL94-5V thermoplastic	Flame retardant UL94-5VA thermoplastic
Dimensions	3.69"L x 2.33"W x 1.36"H	4.00"L x 3.4"W x 1.73"H
Color	Black	Black
Environmental		
Operating	32°F to 104°F (0°C to 40°C); 0% to 90% non-condensing relative humidity	-40°F to 149°F (-40°C to 65°C). Below 32°F (0°C) must use suitably rated non-metallic enclosure. 0% to 90% humidity, non-condensing
Storage	-20°F to 150°F (-29°C to 65°C); 0% to 90% non-condensing relative humidity	

Ceiling and Wall Mount Sensors ATD, ATU and ATP Series

Single lighting circuit 1 to 4 sensors wired to control unit with optional override OFF switch application.

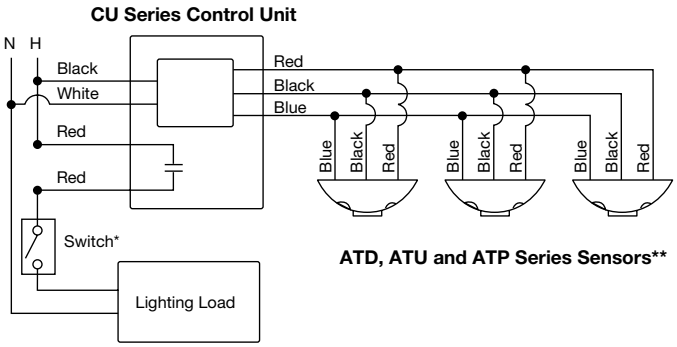

*Optional Override OFFSwitch

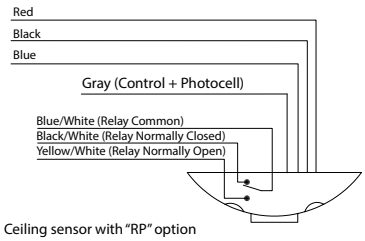

Single lighting circuit with 0-10V dimming and automatic receptacle control application.

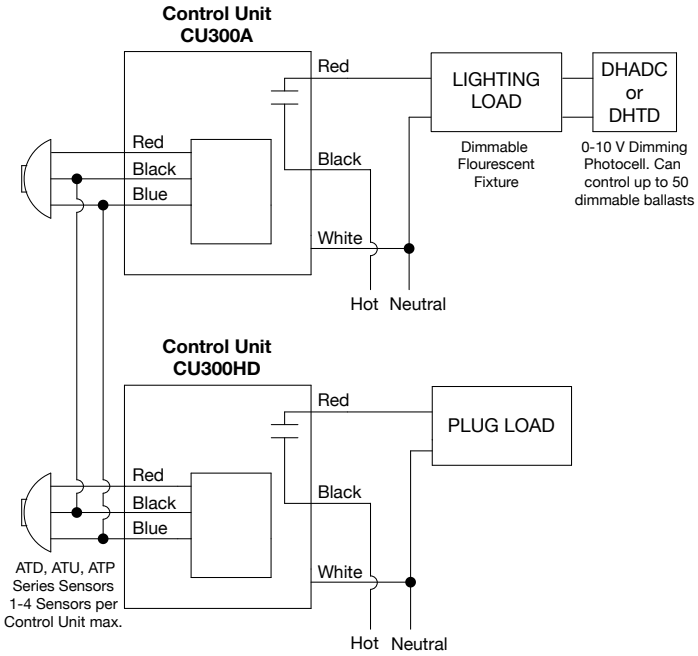

Bi-level lighting circuit and automatic receptacle control application.

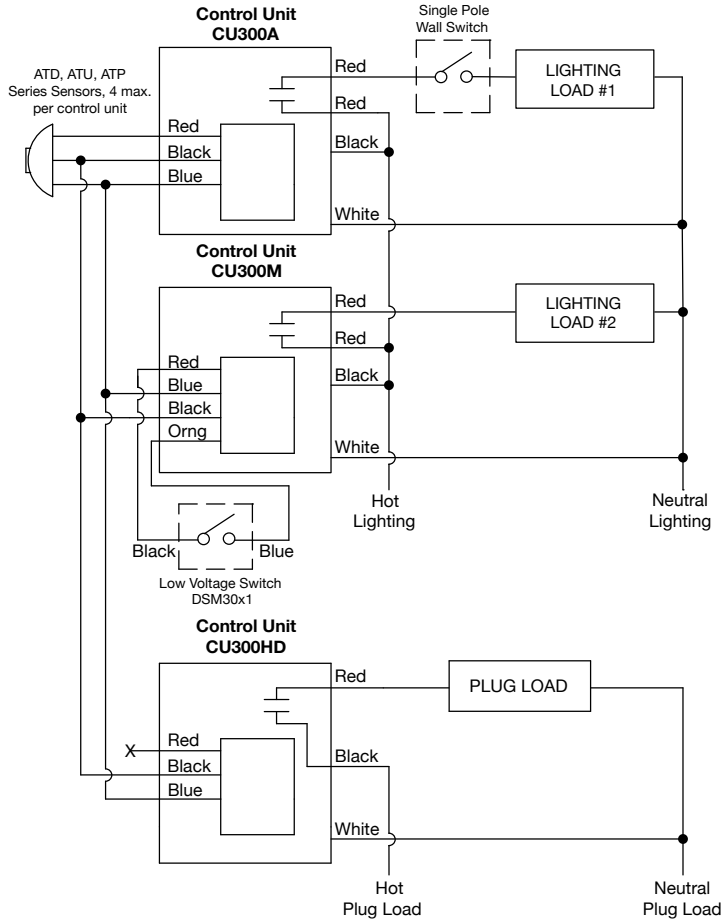

Two lighting circuits and automatic receptacle control application.

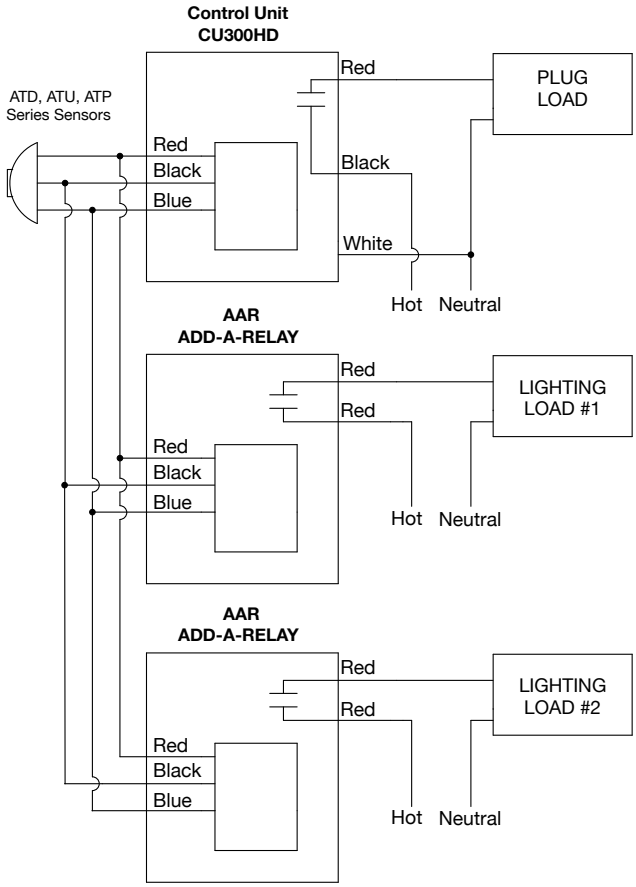

Adaptive Technology Dual, Ultrasonic, and Passive Infrared Ceiling and Wall Mount Sensors ATD, ATU and ATP Series

Single Circuit, Dual Level Switching Application:
1 to 4 sensors wired to control unit with optional override off switches.

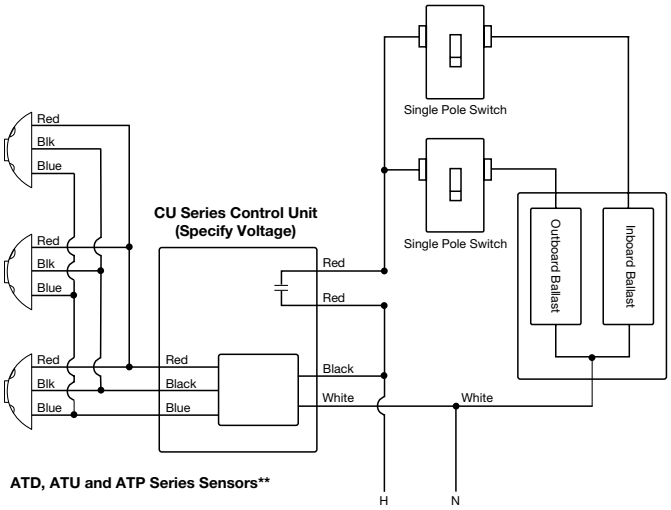

Single Circuit, 3-Way Switching Application:
1 to 4 sensors wired to control unit with optional override off switches.

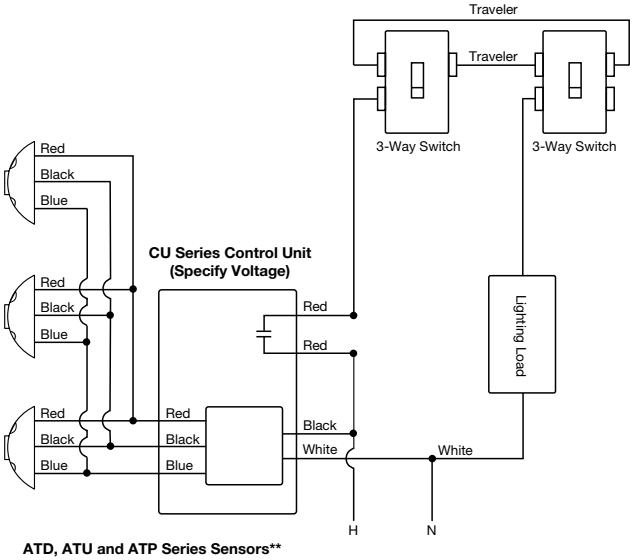

Multi-Circuit Application:
1 to 4 sensors wired to control unit that is wired to a multi-pole lighting contactor.

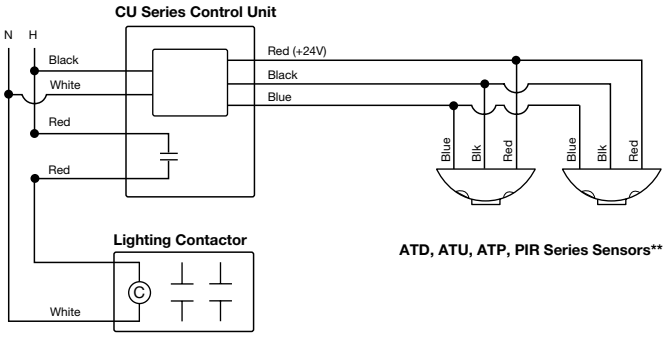

Multipole, Normally Open Lighting contactor to be supplied by Contractor

Single Circuit, 4-Way Switching Application:
1 to 4 sensors wired to control unit with optional override off switches.

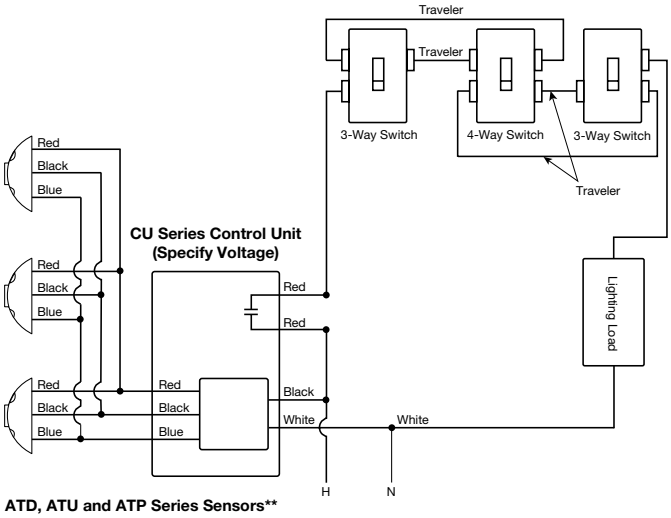

*Note: **For wiring sensors with isolated relay and photocell option (models with "RP" suffix): Photocell Option: Cap off Blue sensor wire. Connect Gray sensor wire to Blue control unit wire. Isolated Relay Option: Common-Blue/White wire, Normally Closed-Black/White wire, Normally Open-Yellow/White wire.*

OPTIMYZER® High Bay and Low Bay End Mount PIR Sensors

User Interface	(1) twelve pin DIP switch
Timer time-outs	Primary: 8-second test mode, 4, 8, 16 and 30 minute time-outs Secondary: (Can be disabled) 30, 60 and 90 minute time-outs
Passive infrared	Dual element pyrometer and spherical Fresnel lens
Daylight sensor	Dual element pyrometer and spherical Fresnel lens designed for robust detection of a walking person*
Coverage	360° lens provided, 180° aisle and end-of-aisle lenses also available
Load ratings (Line voltage units)	120V AC: 800W ballast or tungsten, 5 LED 277V AC: 1200W ballast, 5 LED 347V AC: 1500W ballast 208/240V AC: 1200W ballast 480V AC: 2400W ballast ¼ HP motor load @ 120V AC, ⅙ HP @ 347V AC
Low voltage sensors (Output)	24V DC nominal, 33mA from Hubbell CU series control unit Relay: N/O + N/C contacts; 500mA rated @ 24V DC; 3-wire isolated relay
0-10V Dimming	Capable of sinking up to 30mA (Dimming series)
Dimming presets unoccupied	70%, 60%, 50%, 20% (Dimming series)
Full OFF timer delay enabled Full OFF timer delay disabled	After 60 minutes in the Unoccupied low level state, sensor will turn lighting OFF Sensor will maintain low level setting when there is no occupancy (Dimming series)
Operating environment	Indoor use only models Operating temperature: (standard version) 32°F to 149°F (0°C to 65°C); Relative humidity (non-condensing): 0% to 95%
	Indoor and outdoor use (Watertight) IP65 models HBSXT series Operating temperature: -40°F to 149°F (-40°C to 65°C)
Construction	Casing: High-impact injection-molded thermoplastic
Size and weight	Size: 4.0" Diameter x 1.5" Height; Weight: 7 oz.
Color	White
Mounting	Mounts directly to end of a fixture through an extended ½ inch chase nipple for deeper body fixtures, an optional Extender Adapter (HMHBSA available separately) positions the sensor flush or below the bottom of the reflector for a full field of view
Certifications	cULus Listed, indoor models
	Conforms to UL STD 508, UL STD 244A, and IP65 (Watertight) models HBSXT series
Warranty	5 year limited

*Note: *When used with program start ballast, a 1-2 second delay from occupancy detection to lamp turn-on may be experienced.*

Coverage Pattern

Minor Motion: PIR **Major Motion:** PIR

HMHB Series

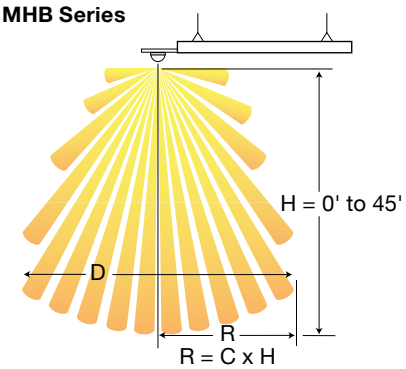

Lens Coverage
C = 1.4 @ 00–30 and 1.1 @ 30–45 (FT)

Height (H)	Radius (R)	Diameter (D)
18	25.2	50.4
20	28	56
24	33.6	67.2
28	39.2	78.4
30	42	84
32	35.2	70.4
36	39.6	79.2
40	44	88
42	46.2	92.4
45	49.5	99

OPTIMYZER® Low Mount Lens Modification Coverage Patterns

Minor Motion: PIR **Major Motion:** PIR

Top View

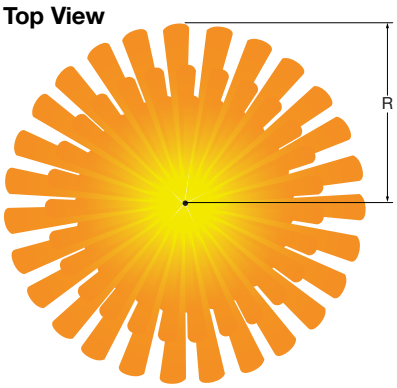

LBRL360

Side View

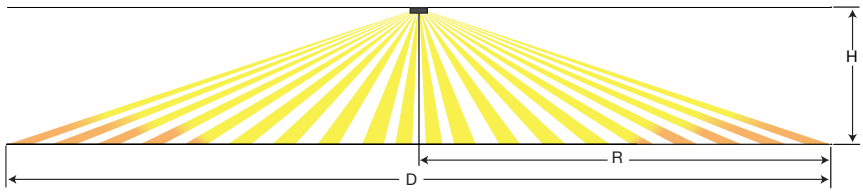

Lens Coverage
3:1 Ratio (FT)

Height (H)	Radius (R)	Diameter (D)
8	24	48
10	30	60
12	36	72
14	42	84
16	48	96

OPTIMYZER® High Bay and Low Bay End Mount PIR Sensors, Low Voltage Sensor with Control Unit

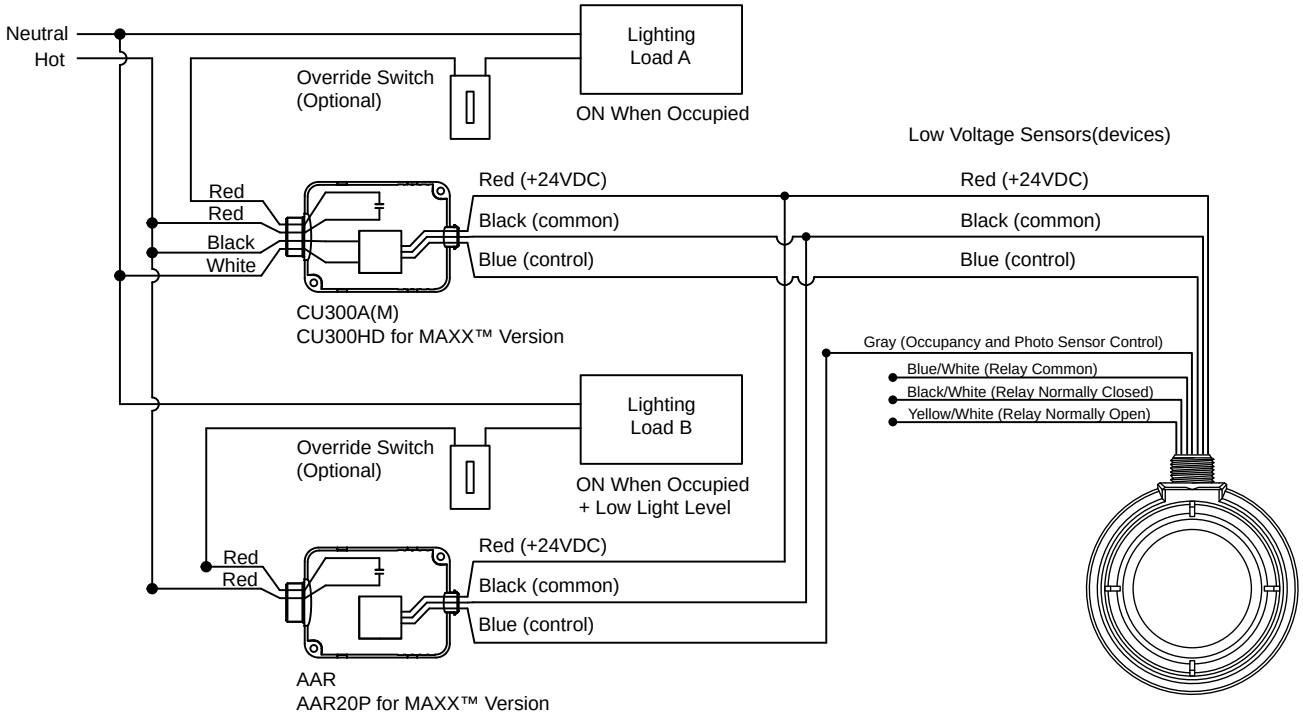

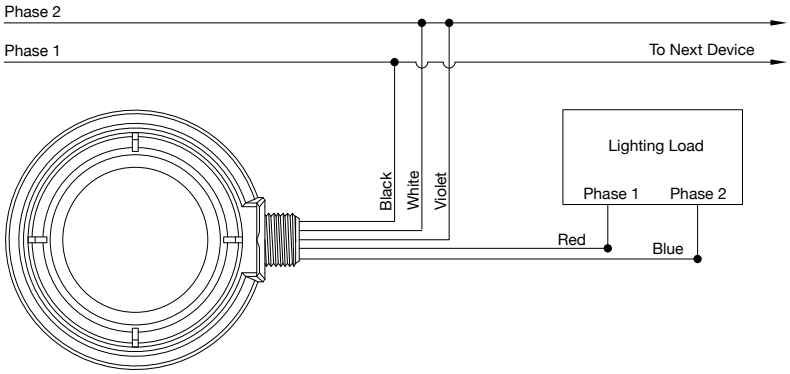

OPTIMYZER® High Bay and Low Bay End Mount PIR Sensors, Dual Relay, Single Fixture

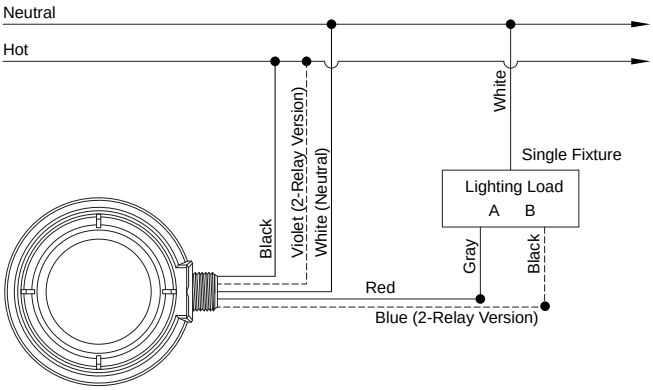

OPTIMYZER® High Bay and Low Bay End Mount PIR Sensors, Dual Relay, Two Fixtures

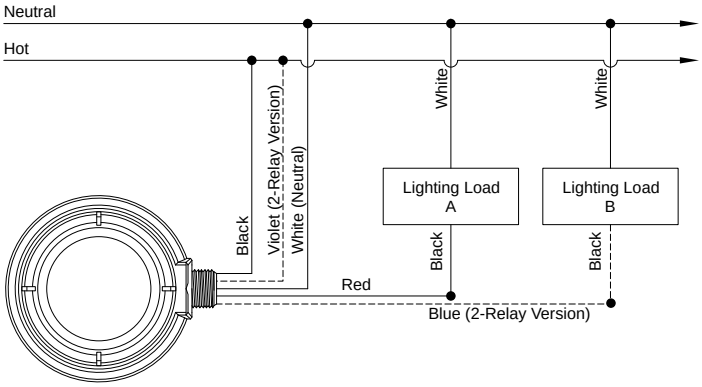

HBL5362LC2W

HBL2172LC2W

HBL® Heavy Duty Style Line® Specification Grade and Hospital Grade Straight Blade Switched Duplex Receptacles

Specifications

Receptacle	Part	Description
Typical Specification - Catalog No. HBL5262LC1, HBL2172LC1	Receptacle	15A (Always Hot), 8.3A (Switched)
Manufacturer's Identification - Hubbell HBL5262LC1 Receptacle	Top	Nylon
Description - Straight Blade Switched Duplex Receptacle	Base	Nylon
Type - 2 Pole, 3 Wire Grounding	Power Contacts	0.031 in. (0.8) Brass
Rating - Uncontrolled (Always Hot) 15A, 125V	Wire Clamp	0.062 in. (1.6) Steel-Nickel Finish
- Controlled (Switched) Tungsten 8.3A, CFL & LED: 3.75A	Mounting Strap	0.047 in. (1.2) Brass
Motor Load: 1/2HP	Line Terminal Screws	#8-32 Brass, Multiple Drive
Certification - cULus 498B SA: UL File No. E481574	Ground Screw	#8-32 Brass, Multiple Drive
Fed. Spec. WC596G	Center Assembly Staple	0.040 in. (1) Steel (Galvanized)
	Automatic Self-Grounding Staple	Stainless Steel
	Mounting Screws	Zinc Plated Steel

Specifications

Receptacle	Part	Description
Typical Specification - Catalog No. HBL5362LC1, HBL2182LC1	Receptacle	20A (Always Hot), 12.5A (Switched)
Manufacturer's Identification - Hubbell HBL5362LC1 Receptacle	Top	Nylon
Description - Straight Blade Switched Duplex Receptacle	Base	Nylon
Type - 2 Pole, 3 Wire Grounding	Power Contacts	0.031 in. (0.8) Brass
Rating - Uncontrolled (Always Hot) 20A, 125V	Wire Clamp	0.062 in. (1.6) Steel-Nickel Finish
- Controlled (Switched) Tungsten 12.5A, CFL & LED: 5A	Mounting Strap	0.047 in. (1.2) Brass
Motor Load: 1HP	Line Terminal Screws	#8-32 Brass, Multiple Drive
Certification - cULus 498B SA: UL File No. E481574	Ground Screw	#8-32 Brass, Multiple Drive
Fed. Spec. WC596G	Automatic Self-Grounding Staple	Stainless Steel
	Mounting Screws	Zinc Plated Steel

Performance

Electrical (Always Hot Receptacle)	
Dielectric Voltage	Withstands 2,000V minimum.
Max. Working Voltage	125V AC
Current Interrupting	Certified for current interrupting at full current.
Temperature Rise	Max 30°C temperature rise at full rated current after 50 cycles of overload at 150% of rated current at power factor of 75%.
Mechanical	
Terminal Identification	Terminals identified in accordance with UL498 and CSA (Brass, White, Green).
Terminal Accomodation	#14-10 AWG stranded or solid copper conductor only.
Product Identification	Ratings are a permanent part of the device.
Environmental	
Flammabilty	UL94V-2
Operating Temperature	32°F (0°C) to 104°F (40°C)

WLC Load Control Devices with Wireless Clear Connect Communication

Electrical	WLCA	WLCU301	WLC301	WLC302	WLC402W
Power Supply	24V DC	100-277V AC, 50/60Hz	100-277V AC, 50/60Hz	100-277V AC, 50/60Hz	100-277V AC, 50/60Hz
Power Output	N/A	24V DC 250mA	N/A	N/A	N/A
Circuits Controlled	N/A	1	1	2	2
Load Capacity		100-277V AC, 20A 1HP @ 120V AC 2HP @ 240/277V AC	100-277V AC, 20A 1HP @ 120V AC 2HP @ 240/277V AC	100-277V AC, 20A 1HP @ 120V AC 2HP @ 240/277V AC	100-277V AC, 20A 1HP @ 120V AC 2HP @ 240/277V AC
Agency Approvals	UL Listed, cULus, FCC, IC, UL/cUL 916 listed for energy management equipment				
Device Type (Transmit or Receive)	TX	TX	RX	RX	RX
Range (Standard/ Obtructed)	30 ft. (10m)	30 ft. (10m)	30 ft. (10m)	30 ft. (10m)	30 ft. (10m)
Range (Unobstructed, line of sight)	60 ft. (30m)	60 ft. (30m)	60 ft. (30m)	60 ft. (30m)	60 ft. (30m)
Physical					
Housing	Flame retardant UL 94-5VA thermoplastic				
Dimensions	4.00"L x 3.4"W x 1.73"H				4.68"L x 4.94"W x 2.78"H
Color	Black	Black	Black	Black	White

Wired Load Control

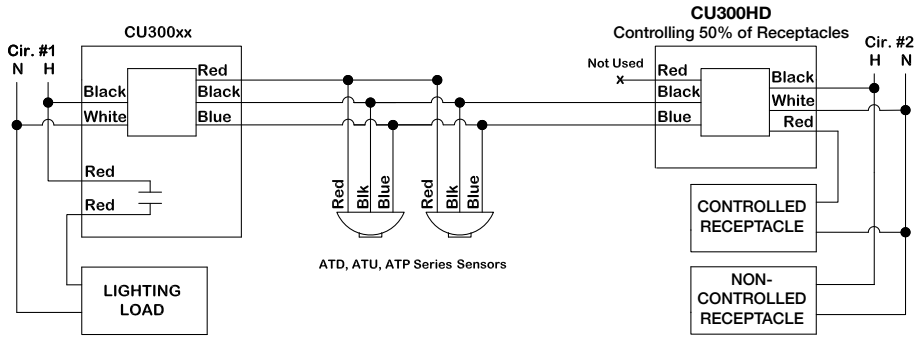

Wireless Load Control

Easily upgrade existing occupancy based lighting control systems to support automated receptacle control systems.

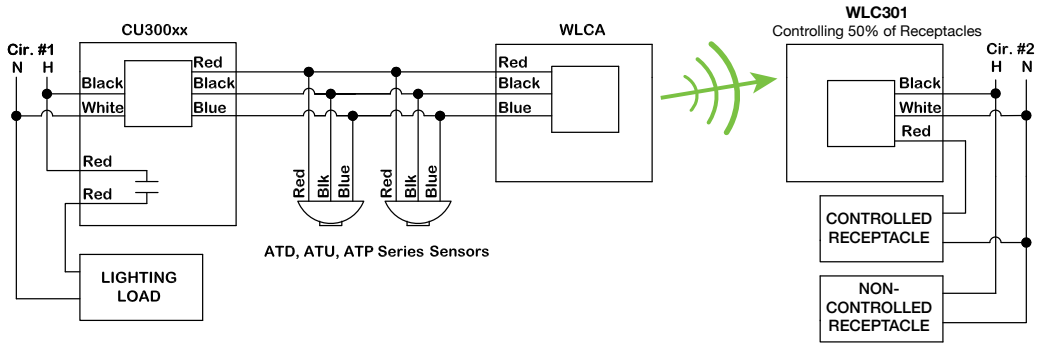

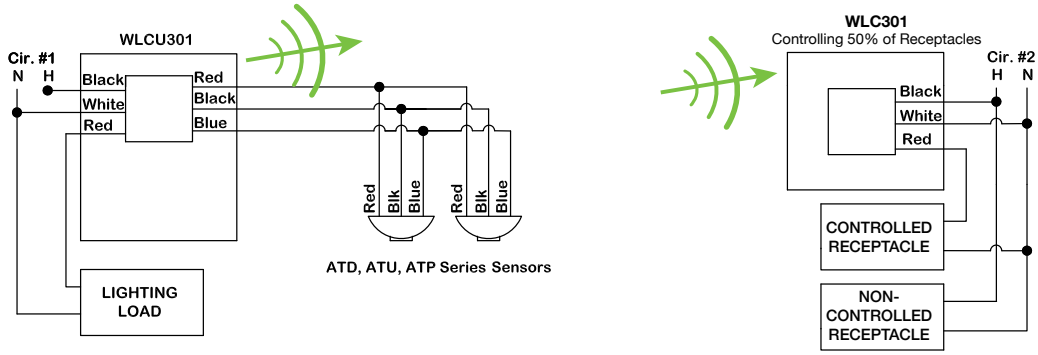

Use WLC302 or -402 for dual circuit control

Clear Connect® is a registered trademark of Lutron Electronics Co., Inc.

Wireless Wall Switch (WLS1278 Series)

Electrical	Operating voltage: 120/277V AC, 50/60Hz; Green indicator light
Operating Environment	Indoor use only Ambient operating temperature: 32°F to 104°F (0°C to 40°C); relative humidity: 0% to 90% humidity, non-condensing
Wire Size	#20 to 16 AWG (0.5 to 1.5mm^2) solid or stranded wire
Capacity	Up to 9 WLAS accessory switches can be configured to work together with one WLS1278
Range	RF range is 30 ft. (10m) obstructed, 60 ft. (18m) line of sight
Certifications	UL Listed, CSA Certified, FCC Approved; Complies with the limits for a Class B digital device, pursuant to Part 15 of the FCC rules
Warranty	1 year

Wireless Control Unit (WLC316R)

Electrical	Operating voltage: 120/277V AC, 50/60Hz LED status indicator: displays load status and provides programming feedback Power failure memory: (Relay returns to previous level prior to interruption) Output is non-latching
Operating Environment	Indoor use only Ambient operating temperature: 32°F to 131°F (0°C to 55°C); Relative humidity: 0% to 90% humidity, non-condensing
Load	Maximum load: 16A general purpose. No minimum Motor rating: 0.5 HP (120V AC), 1.5 HP (277V AC)
Isolated Relay	Normally open (NO) and normally closed (NC) dry contacts Maintained latching output The isolated relay is not rated to control unclamped, inductive loads Inductive loads include, but are not limited to relays, solenoids and motors to control these types of equipment
Range	RF range is 30 ft. (10m) obstructed, 60 ft. (18m) line of sight
Certifications	UL Listed, UL 2043 Plenum Rated, FCC Approved. Complies with the limits for a Class B device, pursuant to Part 15 of the FCC rules. CSA and IC
Warranty	1 year

Range Diagram

Install in center of room to maximize RF coverage.

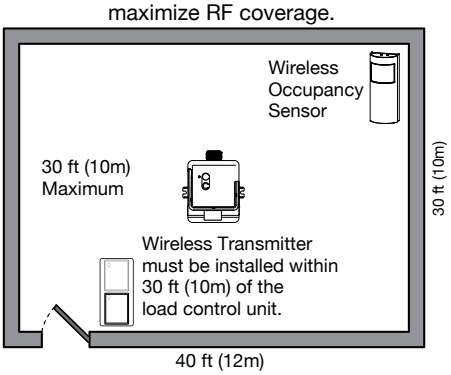

Line of sight distance, 60 ft (18m)

Contact Hubbell first for applications using foil-backed or metallic ceiling tiles.

Wireless Sensor Coverage Patterns

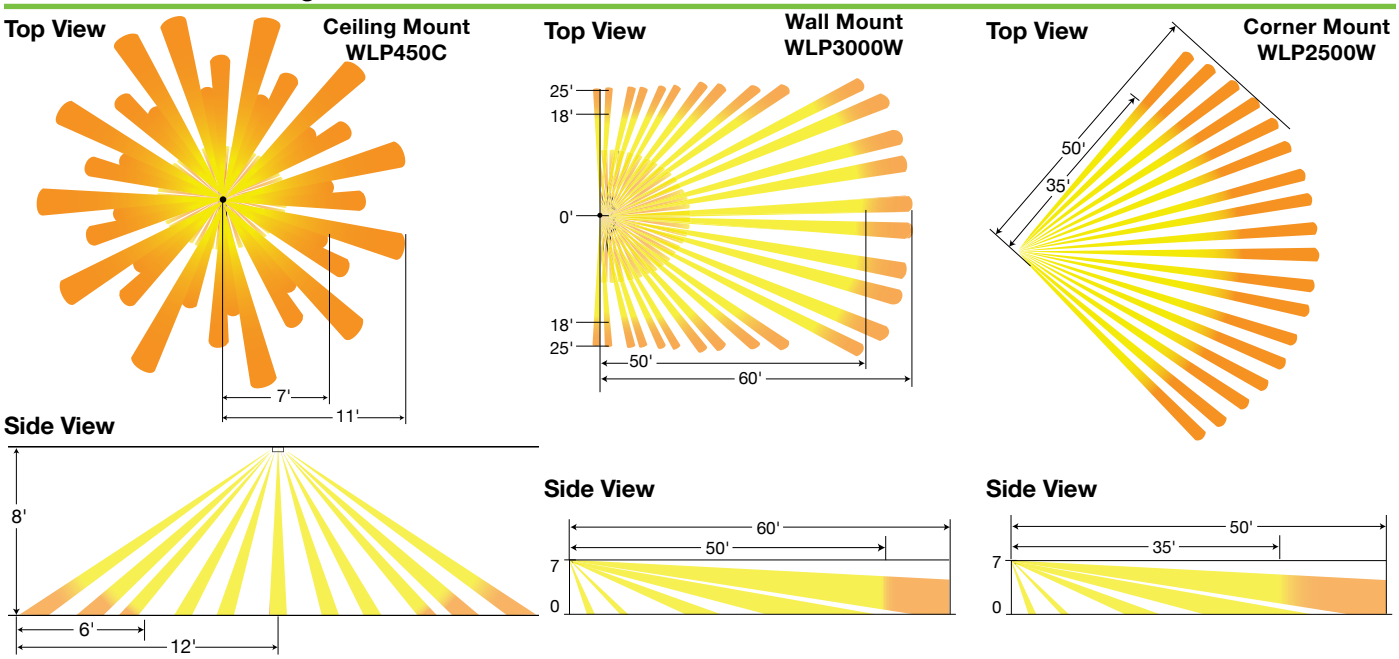

Sensor Coverage Chart (for sensor mounted in center of room)

Ceiling height	Maximum room dimensions for complete floor coverage*	
8 ft. (2.4m)	18 ft. x 18 ft. (5.5m × 5.5m)	324 sq. ft. (30.2m^2)
9 ft. (2.7m)	20 ft. x 20 ft. (6.1m × 6.1m)	400 sq. ft. (37.2m^2)
10 ft. (3.0m)	22 ft. x 22 ft. (6.7m × 6.7m)	484 sq. ft. (44.9m^2)
12 ft. (3.7m)	26 ft. x 26 ft. (7.9m × 7.9m	676 sq. ft. (62.4m^2)

*Note: *12 ft. (3.7m) is the recommended maximum mounting height.*

Clear Connect® is a registered trademark of Lutron Electronics Co., Inc.

Wireless Hallway Sensor

Electrical	Operating voltage: 3V Operating current: 14 µA nominal 10-year battery life design Supplied with one CR 123 lithium battery Non-volatile memory (saved changes are stored during power loss)
Construction	High impact, UL 94-5V plastic
Operating Environment	Indoor use only Operating temperature: 32˚F to 104˚F (0˚C to 40˚C)
Range	RF range is 30 ft. (10m) obstructed, 60 ft. (18m) line of sight
Sensor Coverage Test	Dedicated test button Lens illuminates orange in response to motion during test mode
Wireless Communication Test	Dedicated test button; Turn associated loads ON and OFF
Time Out Options	1 minute (intended for use in high-activity, briefly occupied areas only); 5 minutes; 15 minutes (default setting); 30 minutes
Auto ON Options	"Enabled" – Sensor turns lights ON and OFF automatically – default setting "Disabled" – Lights must be turned ON manually from a switching device Sensor turns lights OFF automatically
Sensitivity Options	Low Activity (default setting); Medium Activity; High Activity
Certifications	cULus Listed, FCC Certified, IC Certified Meets CA (USA) Energy Commission Title 24 requirements
Warranty	1 year

Wireless Hallway Sensor Coverage Patterns

Top View

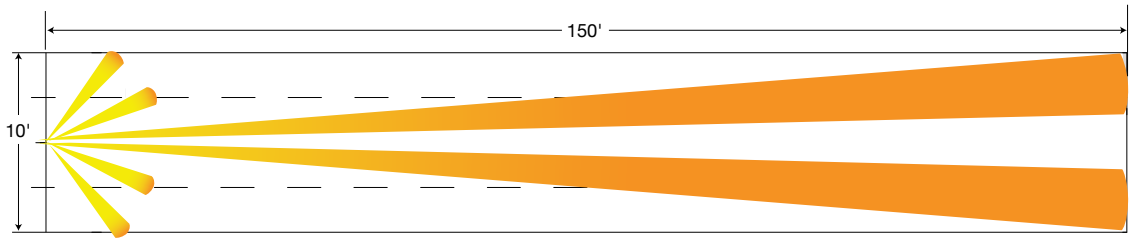

Side View

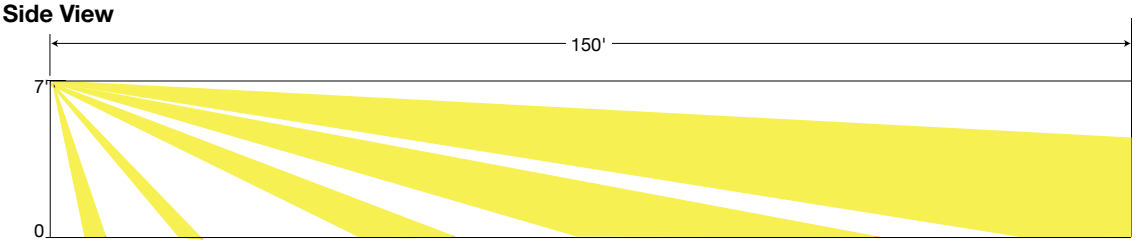

WLP150H

Sensor Coverage Chart (Hallway)

Width of Hall	Length of Hall
6 ft. (1.0m) or less	50 ft. (15.2m)
8 ft. (2.4m)	100 ft. (30.5m)
10 ft. (3.0m) or more	150 ft. (45.7m)

Note: Sensor mounting shown at 7 ft. (2.1m)Mounting height should be between 6 and 8 ft. (1.6 and 2.4m).

Clear Connect® is a registered trademark of Lutron Electronics Co., Inc.

Wireless Wall Switch (WLS1278 Series)

Single Location Installation
WLS1278xx*

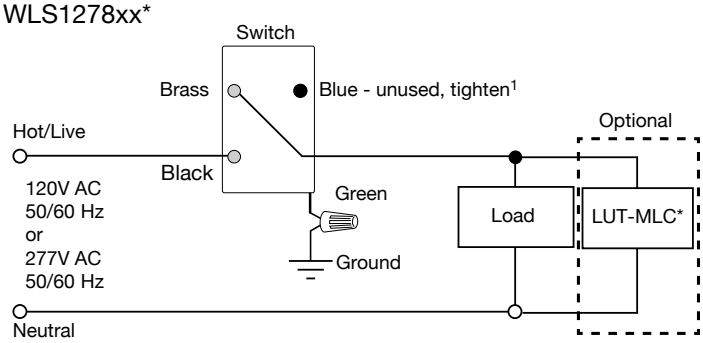

*Note: *The included LUT-MLC ensures proper function when fluorescent, CFL, or LED loads are used. Install the LUT-MLC inside a load fixture or in a separate J-box of the circuit.*
1 When using controls in single location installations, tighten the blue terminal without any wires attached. DO NOT connect the blue terminal to any other wiring or to ground.
2 Up to 9 Accessory Switches may be connected to the Wireless Switch. Total blue terminal wire length may be up to 250 ft. (76m).
3 Requires WLAS120 for 120V AC applications, and WLAS277 for 277V AC applications.

Multi-Location Installation[2]
with WLAS1278xx or WLAS277xx[3]

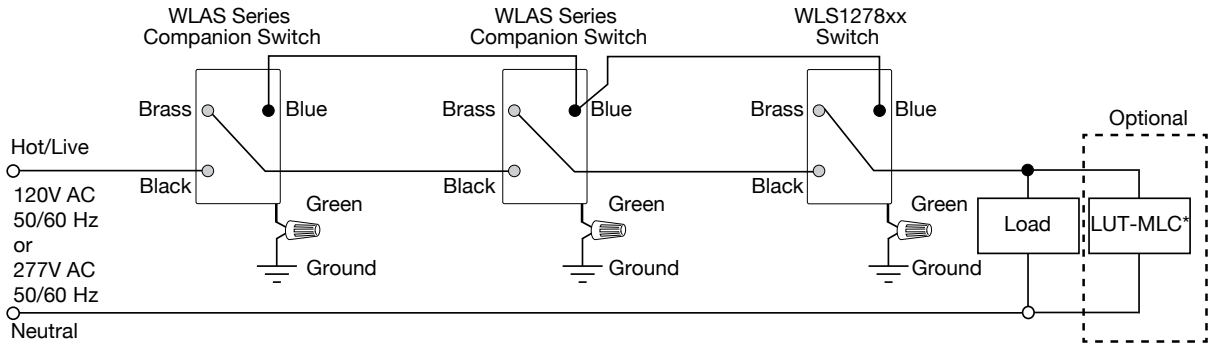

Low Voltage Switches with 0-10V Dimming

Specifications

Base Catalogs: DSM30xx, DSL30xx, DSC010xx, DSM010xx, DSL010xx
Compatible with Hubbell Wiring Device-Kellems CU300HD, CU300M control units, AAR20P relay packs.
0-10V Dimming Series compatible with IEC60929 Annex E.2 compliant LED Drivers
Accepts Hubbell Wiring Device-Kellems NPS26 and NP26 series decorator style wall plates (Not Included)
Two-year warranty

Electrical Ratings

100mA @ 30VDC
0-10V Dimming Series: Current Sinking Capacity: 100mA
Available in Latching, Momentary, and Combination (DSC010series) of both configurations

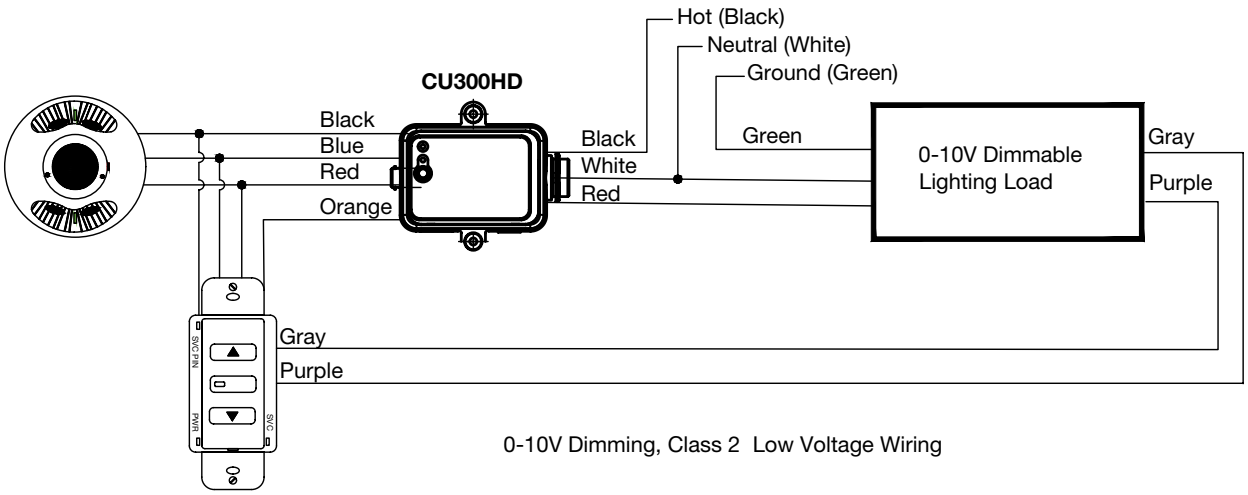

0-10V Dimming, Class 2 Low Voltage Wiring

Clear Connect® is a registered trademark of Lutron Electronics Co., Inc.

Distributed Control Load:Logic Room Controller

General Specifications	
Electrical Ratings	Input: 120/277/347VAC, 20A Max, 60Hz 347VAC, 20A Max, 60Hz Output*: 20A, Tungsten, 120VAC only 20A, Magnetic Ballast, 8A LED 16A, Electronic Ballast, 8A LED 1 H.P. Motor @120V, 3/4 H.P. @277V; 1\2 H.P.@347V *For (2) relay models the maximum combined output of both relays: 20A Low Voltage Ports: Class 2 24VDC, 250mA MAX (all outputs combined)
Dimming	0-10V, 60mA per channel (LLC2RD) For use with low-voltage, two-wire dimming ballast and LED drivers.
Operating Environment	Operating Temperature: 0°C to 40°C Relative humidity (non-condensing): 0 to 95%
Construction	Housing: GSM UL Rated 94 HB Plastic
Plenum rated	Complies with requirements for use in a plenum area Plenum rated for external junction box mounting
Size and Weight	Size: 5.75"L x 3.85"W x 1.30"H Weight: 4 oz
Color	Yellow
Mounting	Mounts directly to an external junction box through an extended ½" chase nipple.
Patents	Patent(s) Pending
Certifications	Conforms with UL916 and Certified to CAN/CSA C22.2 No. 205-M1983 IC Approved
Warranty	Five-year limited

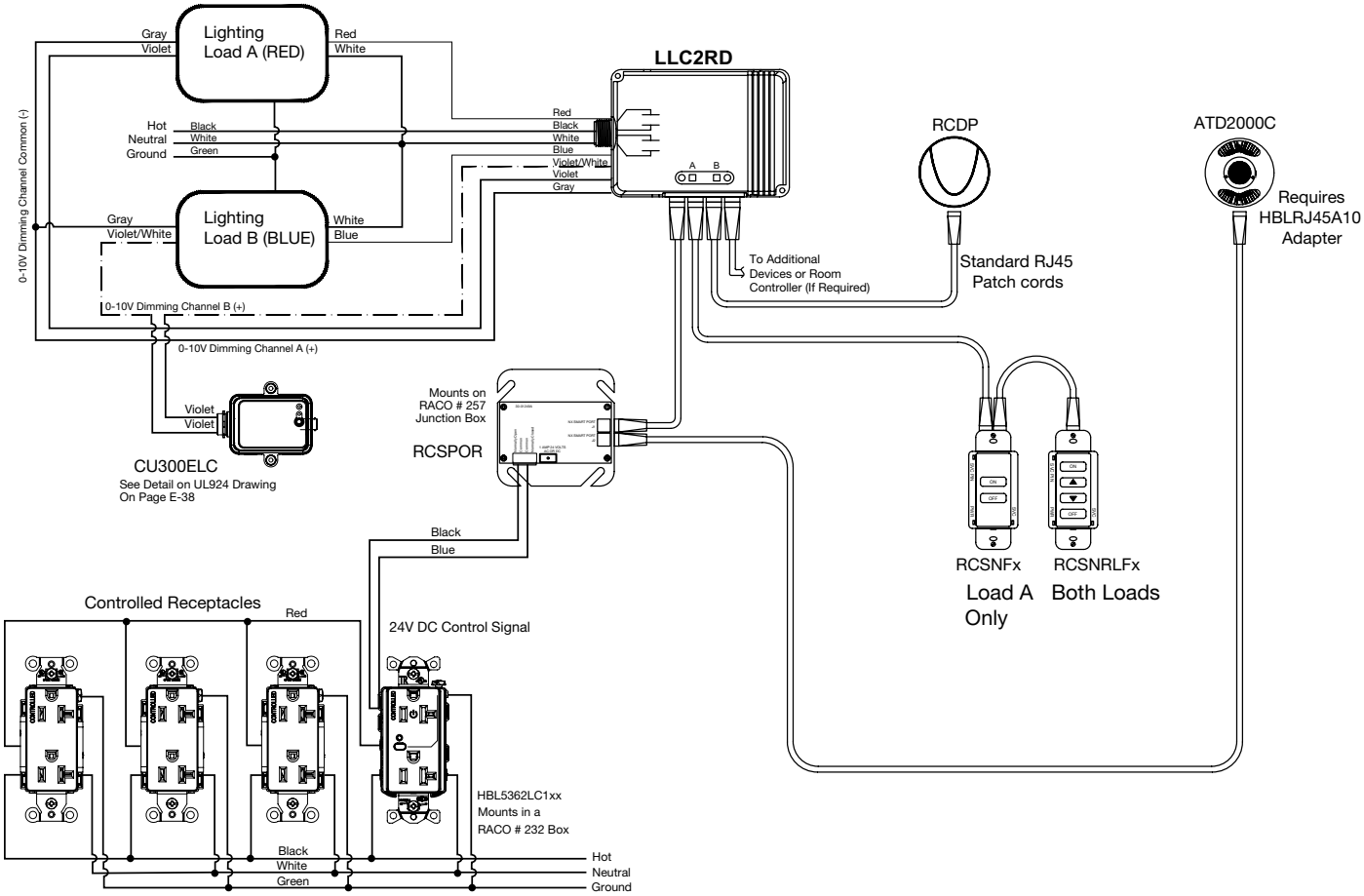

Centralized Control - Load:Logic® Control Panels, Low Voltage Connections

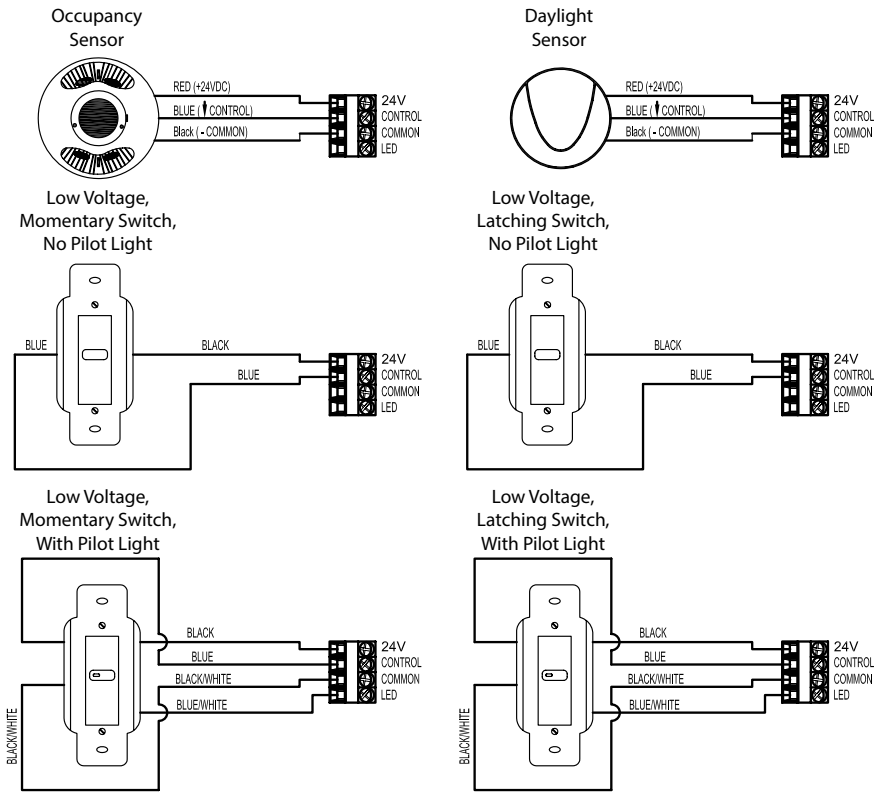

Enclosure Dimensions

4/8 Relay Panels

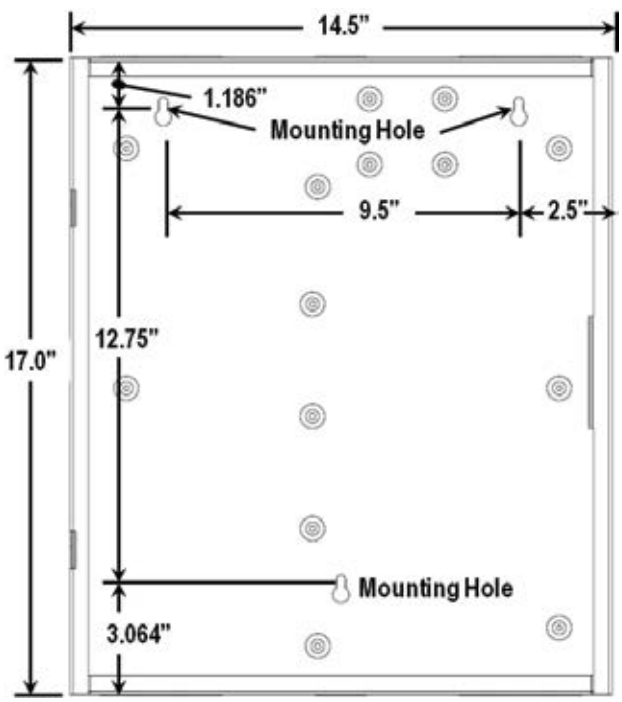

16/24 Relay Panels

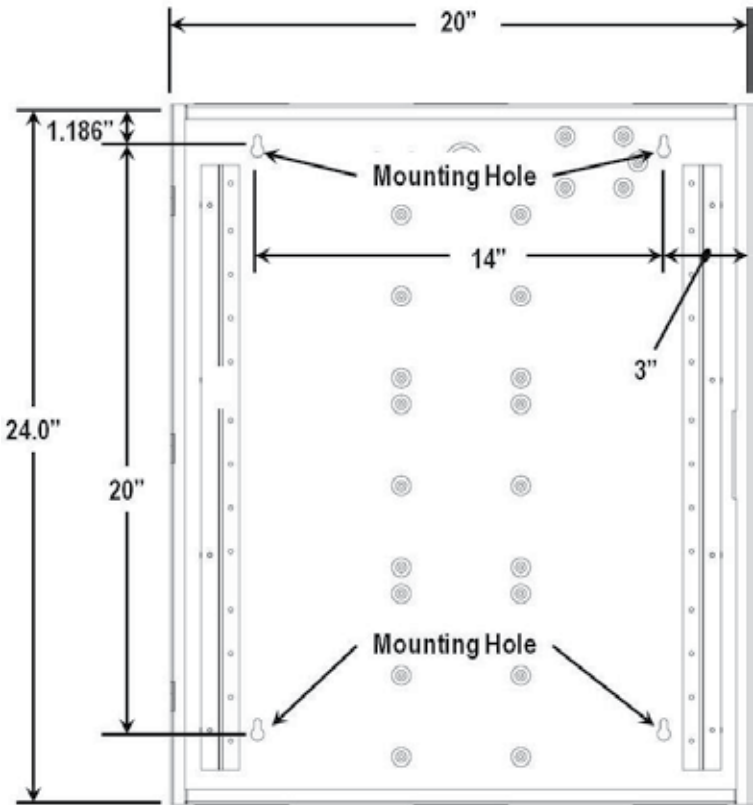

CU300ELC Unit Wired with Control Unit CU300HD

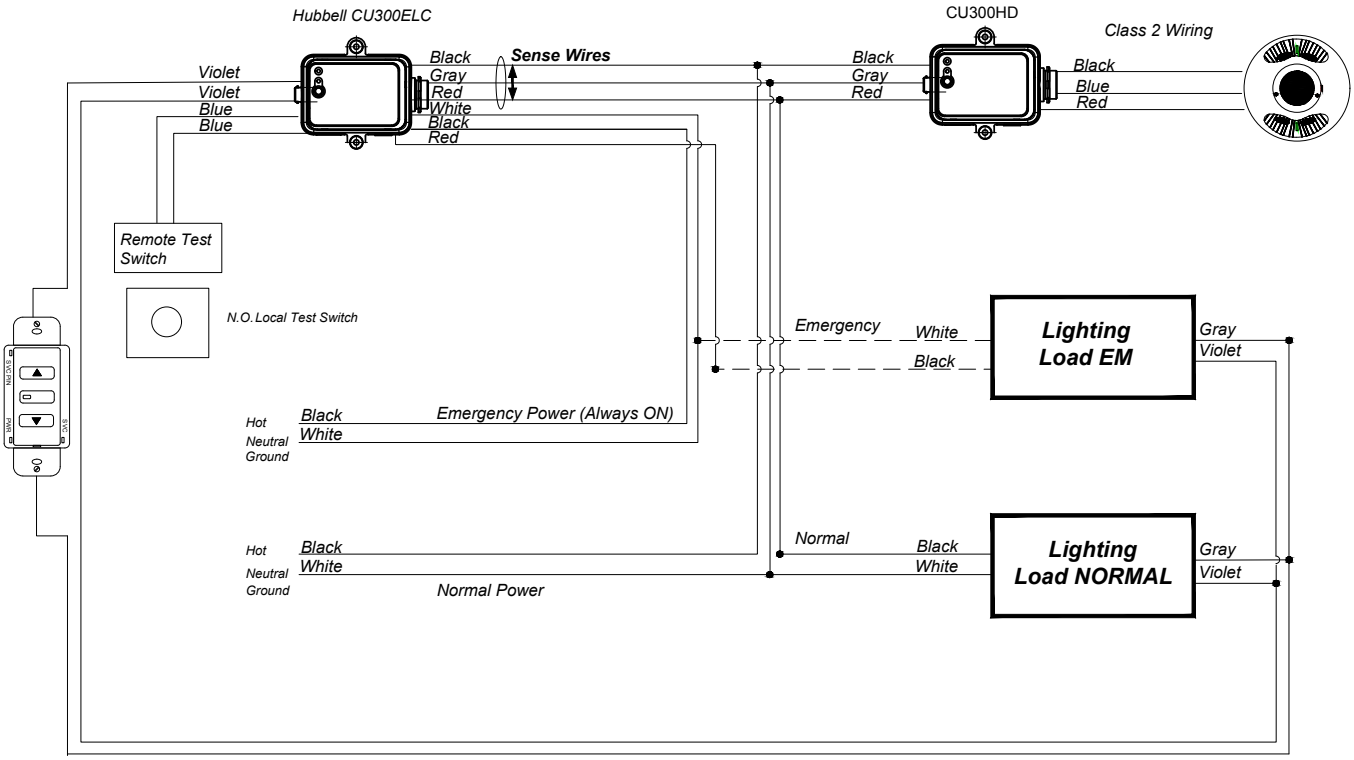

Class 2 Wiring 0-10V Dimming

CU300ELC Unit Wired with Room Controller LLC2RD

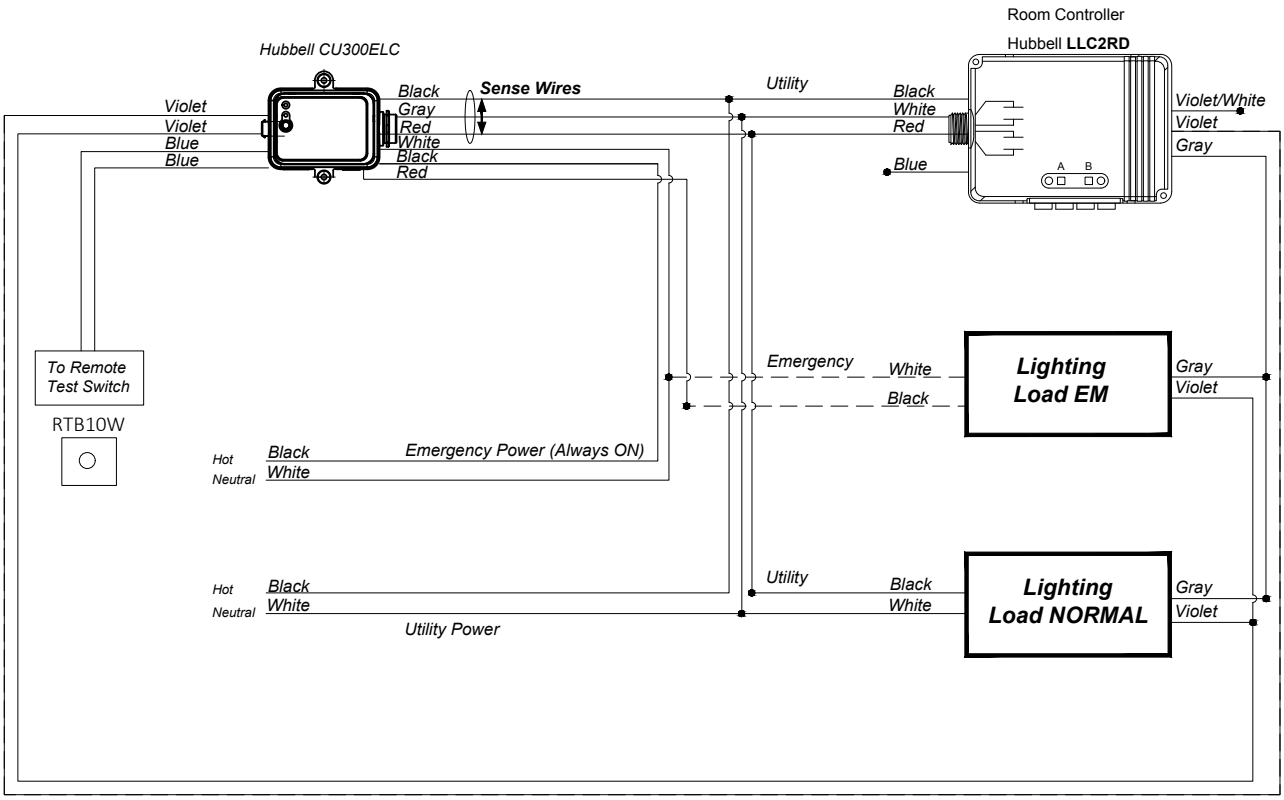

Class 2 Wiring 0-10V Dimming