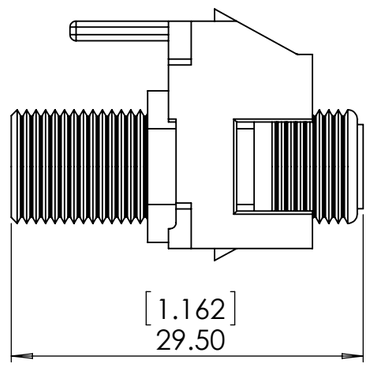

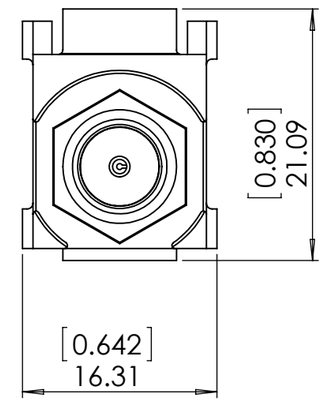

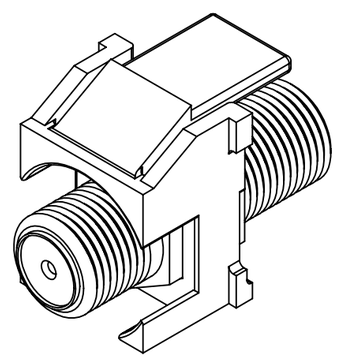

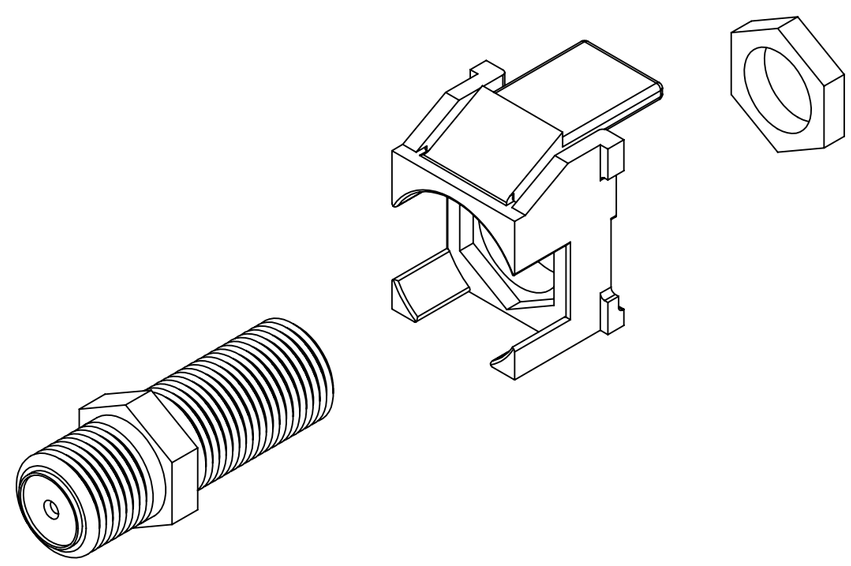

PROPRIETARY AND CONFIDENTIAL
THE INFORMATION CONTAINED
IN THIS DRAWING IS THE SOLE
PROPERTY OF On-Q/LEGRAND.
ANY REPRODUCTION IN PART OR
AS A WHOLE WITHOUT THE WRITTEN
PERMISSION OF On-Q/LEGRAND
IS PROHIBITED. DRAWING IS SUBJECT
TO CHANGE WITHOUT NOTICE.

legrand®
P.O. Box 60907
Middletown, PA 17106-0907
1-800-321-2343

TITLE:
GOLD STANDARD F CONNECTOR
-

SIZE	DWG NO	FILE NAME	CUST REV
A	WP3480-WH	CD-WP3480-WH	A

REVISED DATE	SCALE	SHEET
3/26/2015	NONE	1 OF 1

ACAD