NOTES:

1. COATING: POWDER
2. STEEL GAUGE: 18

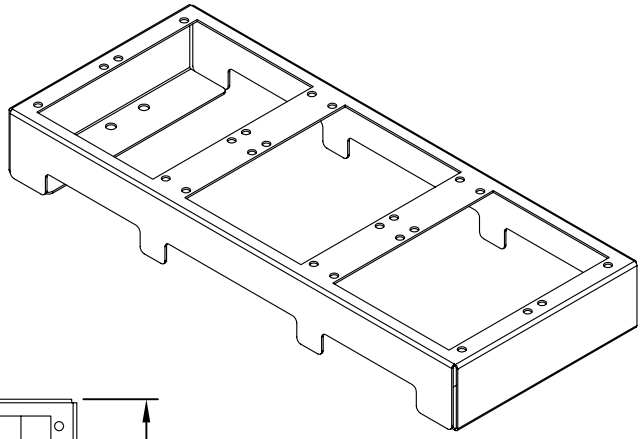

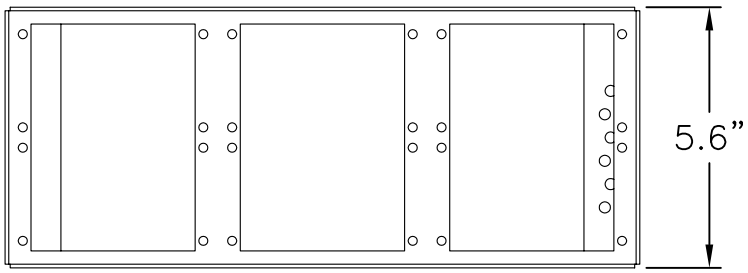

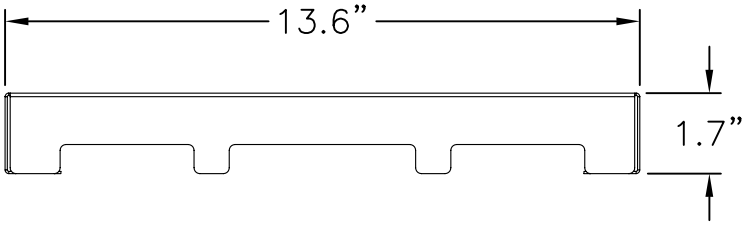

PROPRIETARY AND CONFIDENTIAL
THE INFORMATION CONTAINED
IN THIS DRAWING IS THE SOLE
PROPERTY OF On-Q/LEGRAND.
ANY REPRODUCTION IN PART OR
AS A WHOLE WITHOUT THE WRITTEN
PERMISSION OF On-Q/LEGRAND
IS PROHIBITED. DRAWING IS SUBJECT
TO CHANGE WITHOUT NOTICE.

on·Q
legrand
P.O. Box 60907
Middletown, PA 17106-0907
1-800-321-2343

TITLE:

SIX BAY MODULE MOUNTING BRACKET

SIZE	DWG NO	FILE NAME	CUST REV
A	F9001	CD-F9001	1

REVISED DATE	SCALE	SHEET
11/02/07	NONE	1 OF 1

ACAD