Instruction Sheet

VWM SERIES

Vertical Wall Mount Rack

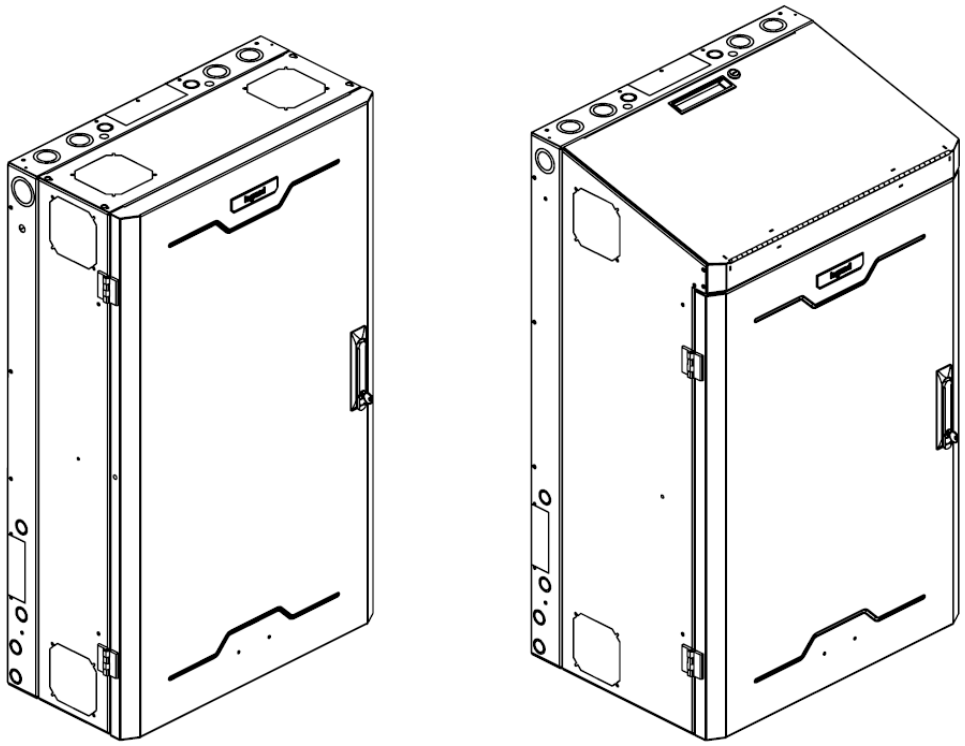

THANK YOU

Thank you for purchasing the VWM Series.
Please read these instructions thoroughly before installing or assembling this product.

PRODUCT FEATURES

- Flexible and configurable vertical wall mount solution to accommodate a wide variety of applications.
- Two backpan sizes with multiple rail mounting locations, and rail bracket options allow customers to choose their mounting depth and rail type (12-24 or cagenut).
- Deeper overall depth helps future-proof your equipment space needs while leaving room for cabling.
- Full and split door options available.
- The enclosure also facilitates cable management and device mounting utilizing the patented Lever Lock™ system.

71601943 Rev 00

TABLE OF CONTENTS

Important Safety Instructions....3 - 4
Weight Ratings....4
Specifications....4
Backpan Supplied Components and Hardware....5
Required Tools....5
Introduction....6
Removing the Full Door and Top From a Full Door Configuration....7 - 10
Removing the Split and Front Door From a Split Door Configuration....11 - 13
Reversing the Door (If Applicable)....14
Removing Extenders From the Backpan (If Applicable)....14 - 16
Mounting the Backpan....17
Grounding and Bonding....18
Connecting 4” AC Fan Options to Bonding Points....18
Relocating Rackrails on the Fixed Position Mounting Rail Brackets....19
Rotating Pivot Bracket Rackrails From 10-32 to Cagenut (If Desired)....19
Relocating Fixed Position Mounting Rail or Pivot Brackets on the Backpan....20
Using the Pivot Mounting Rail Brackets....21
Relocating Optional Lever Lock™ on the Backpan....22 - 24
Venting the Enclosure Passively With a Full Door Configuration....25
Venting the Enclosure Actively With a Full Door Configuration....26
Venting the Enclosure Passively With a Split Door Configuration....27
Venting the Enclosure Actively With a Split Door Configuration....28
Installing the Power Mounting Bracket....29 - 30
Cable Management....31

IMPORTANT SAFETY INSTRUCTIONS

- Read these instructions.
- Keep these instructions.
- Heed all warnings.
- Follow all instructions.
- Clean only with dry cloth.
- Only use attachments/accessories specified by the manufacturer.

DANGER HAZARDOUS VOLTAGE: The lightning flash with the arrowhead symbol, within an equilateral triangle is intended to alert the user to the presence of uninsulated dangerous voltage within the product's enclosure that may be of sufficient magnitude to constitute a risk of electric shock to persons.

WARNING: A warning alerts you to a situation that could result in serious personal injury or death.

CAUTION: A caution alerts you to a situation that may result in minor personal injury or damage to the product and/or property.

NOTE: A note is used to highlight procedures pertaining to the installation, operation, or maintenance of the product.

WARNING: Failure to read, understand and follow the following information can result in serious personal injury, damage to the equipment or voiding of the warranty.

CAUTION: All installation and assembly steps must be performed by qualified personnel.

CAUTION: Ensure that the wall has a structural load capacity that will support the weight of the cabinet fully loaded with equipment.

CAUTION: Individual components mounted inside of the wall mount rack must have their own fire enclosure.

CAUTION: The following parts are not effectively bonded to the protective earth terminal: Rack rails, lace bars, Lever Lock™, shelves, baffle, blanking panels, fans, and cable management. If any part needs to be bonded to the protective earth terminal it shall be done in accordance with Article 250 of the National Electrical Code.

CAUTION: Power cord, for fans or other accessories, need to be secured to ensure that they are routed away from pinch points and moving parts.

CAUTION: Do not attempt to unload or move the enclosures alone. Make sure to have sufficient amount of personnel and equipment to safely move this product.

CAUTION: To reduce the risk of personal injury, these mounting instructions must be followed and proper weight capacities must be observed.

INSTRUCTIONS IMPORTANTES SUR LA SÉCURITÉ

- Lire ces instructions.
- Conservez ces instructions.
- Respectez tous les avertissements.
- Suivez toutes les instructions.
- Nettoyer uniquement avec un chiffon sec.
- N'utilisez que des accessoires spécifiés par le fabricant.

DANGER TENSION DANGEREUSE: Le symbole de la pointe de flèche, dans un triangle équilatéral, est destiné à alerter l'utilisateur sur la présence de tension dangereuse non isolée dans l'enceinte du produit qui peut être d'une ampleur suffisante pour constituer un risque d'électrocution.

AVERTISSEMENT: Un avertissement vous avertit d'une situation pouvant entraîner des blessures graves ou la mort.

ATTENTION: Une attention vous avertit d'une situation pouvant entraîner des blessures mineures ou des dommages au produit et/ou à la

REMARQUE: Une remarque est utilisée pour mettre en évidence les procédures relatives à l'installation, au fonctionnement ou à l'entretien du produit.

AVERTISSEMENT: Ne pas lire, comprendre et suivre les informations suivantes peut entraîner des blessures graves, des dommages à l'équipement ou de la nullité de la garantie.

ATTENTION: Toutes installation et de montage étapes doivent être effectuées par du personnel qualifié.

ATTENTION: Veiller à ce que le mur a une capacité de charge structurelle qui supporter le poids de le cabinet entièrement chargé avec l'équipement.

ATTENTION: Les composants individuels montés à l'intérieur du rack doivent avoir leur propre.

ATTENTION: Les pièces suivantes ne sont pas correctement liés à la borne de terre de protection: rails de rack, des bars de dentelle, Lever Lock™, des étagères, des chicanes, des panneaux d'obturation, des fans, et la gestion des câbles. Si une partie doit être lié à la borne de terre de protection, il doit être fait conformément à l'article 250 du Code national de l'électricité.

ATTENTION: Le cordon d'alimentation, pour les fans ou autres accessoires, doivent être fixé à veiller à ce que ils sont acheminés loin des points de pincement et des pièces mobiles.

ATTENTION: Ne essayez pas de décharger ou déplacer les enceintes seul. Assurez-vous d'avoir quantité suffisante de personnel et de matériel pour déplacer ce produit en toute sécurité.

ATTENTION: Pour réduire le risque de blessures, ces instructions de montage doivent être respectées et les capacités de poids appropriées doivent être respectées.

WEIGHT RATINGS

Model	Weight Rating
VWM	150 lbs. Maximum Total Rated Load
Optional Pivoting Mounting Rail Bracket	20 lbs. Maximum Total Rated Load
Full Door Option	30 lbs. Maximum Total Rated Load

SPECIFICATIONS

Heights: 36” and 42”
Widths: 25”
Depths: 10” and 16“ (2, 4, 6, 8, RU with Fixed Position Mounting Rail Bracket; 2 and 4 RU with Pivot Mounting Rail Bracket)

- Enclosure is intended for use in ambient temperatures of 32°F (0°C) to 140°F (60°C).

BACKPAN SUPPLIED COMPONENTS AND HARDWARE

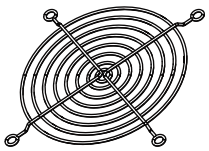

(4x) Vent Guard
A

(16x) 6-32
Flange Nut
B

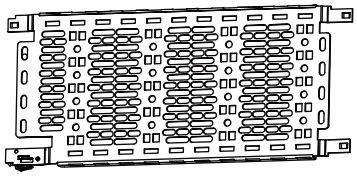

Backpan
Lever Lock™ Plate*
(VWMBPLL)
C

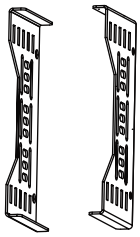

Backpan
Lever Lock
Brackets*
D

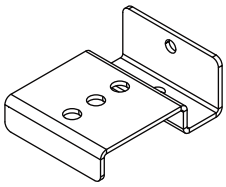

(2x) Power
Mounting
Bracket
E

(2x) 10-32
Flange Nut
F

(2x) 10-32 x 3/8”
Thread Forming Screw
G

(5x) 6-32 x 5/16”
Phil. Bonding Screw*
H

(2x) Lever Lock
Securing Rivet*
K

(20x) Lever Lock
Plate Washer*
L

(16x) 6-32 x 3/8”
Phil. Screw
M

* Optional accessories. Ordered Separately.

NOTE: Additional hardware is included that may not be required for your installation.

OPTIONAL PROTECTIVE EARTH TERMINAL COMPONENTS (FOR USE WITH 4” AC FAN OPTIONS, MODEL NO. PET-K-VWM)

10-32 Locking Nut
N

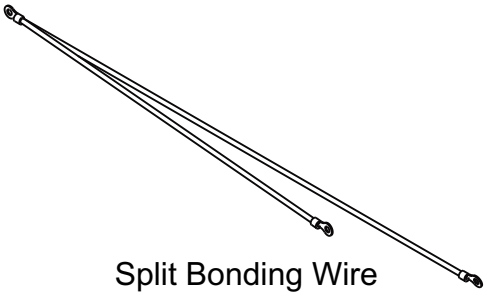

Split Bonding Wire
P

(2x) M4 x 8MM Phil.
Head Combo Screw
R

REQUIRED TOOLS

- No. 2 Phillips Driver
- 10 IP Torx Plus bit
- 5/16” Socket Wrench
- 3/8” Socket Wrench
- 10mm Socket Wrench
- Hammer

WARNING: Use tools with caution and follow all necessary safety protocols.
AVERTISSEMENT: Utiliser des outils avec prudence et suivre tous les protocoles de sécurité nécessaires.

INTRODUCTION

NOTE: The enclosures shown in this instruction sheet includes several components, such as doors and brackets, which may or may not be a part of your configuration. Topics show how to remove or reposition many of these items and separate instruction sheets provide even more detail.

BACKPANS FOR DIFFERENT DOORS

There are 2 VWM series backpans that differ based on your selection of a full door or split door as follows:

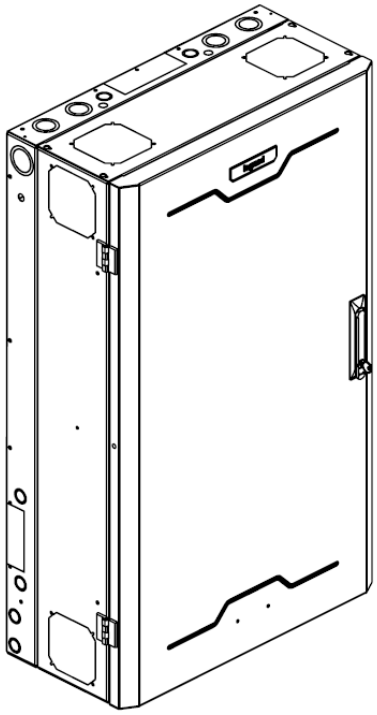

VWM With Full Door
VWMFD-XRU-36-B

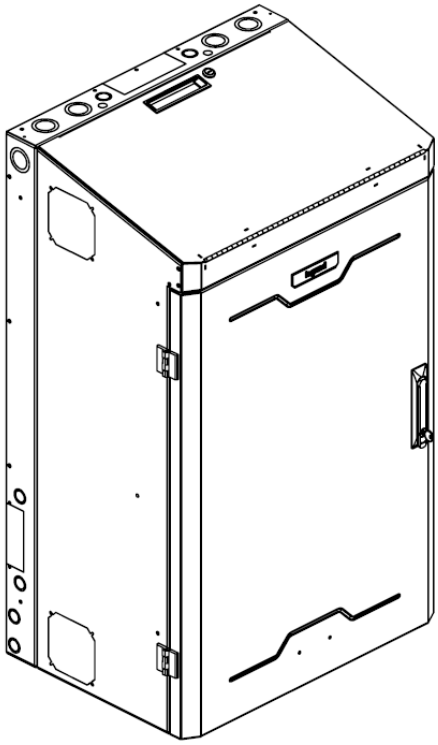

VWM With Split Door
VWMSD-XRU-XX-B

NOTE: Images in this guide not specifically illustrating the full or split door may show either backpan.

REMOVING THE FULL DOOR AND TOP FROM A FULL DOOR CONFIGURATION

NOTE:

- If your preconfigured enclosure includes a full door, it may be helpful to remove either the full door and/or the top before mounting the backpan and installing any equipment.

1. Use the quick disconnect on the door bonding wire to free the connection between the full door bonding stud and the extender bonding stud. (**FIGURE A**)

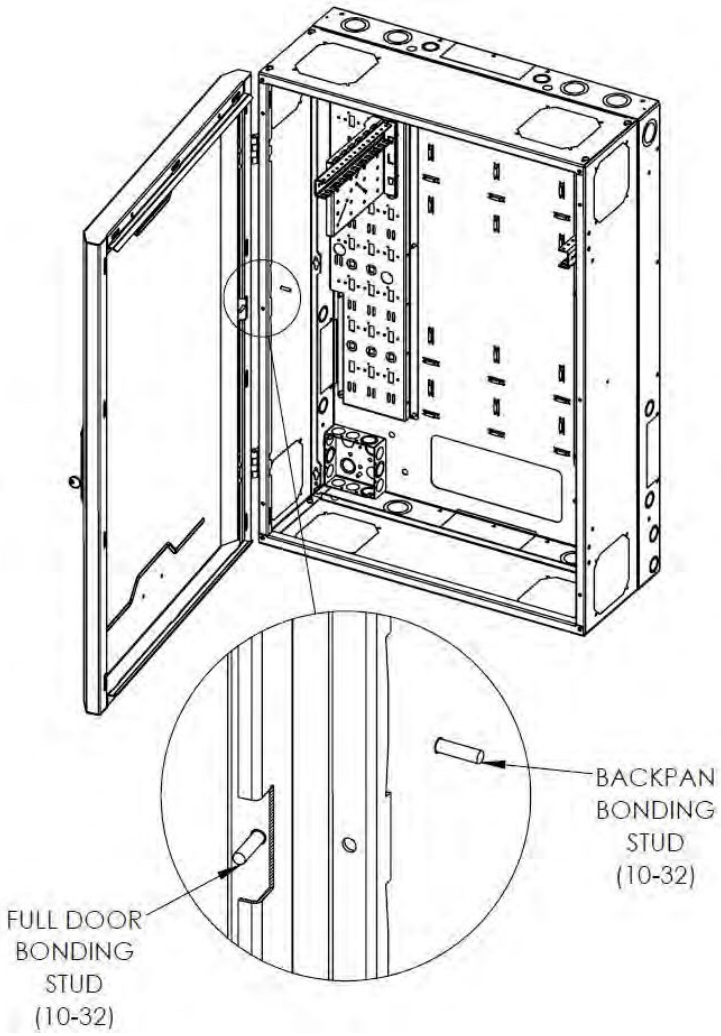

FIGURE A

CAUTION: The bonding wire must be used when reattaching the door to ensure proper bonding.
ATTENTION: Le fil de liaison doit être utilisé lorsque la porte est remis pour assurer une connexion électrique appropriée.

REMOVING THE FULL DOOR AND TOP FROM A FULL DOOR CONFIGURATION (CONTINUED)

2. Open the full door to 90º.
3. Remove the (2x) M6 nuts from each hinge (remove nuts from the bottom hinge first). (**FIGURE B**) Carefully set the full door and hardware aside for reinstallation.

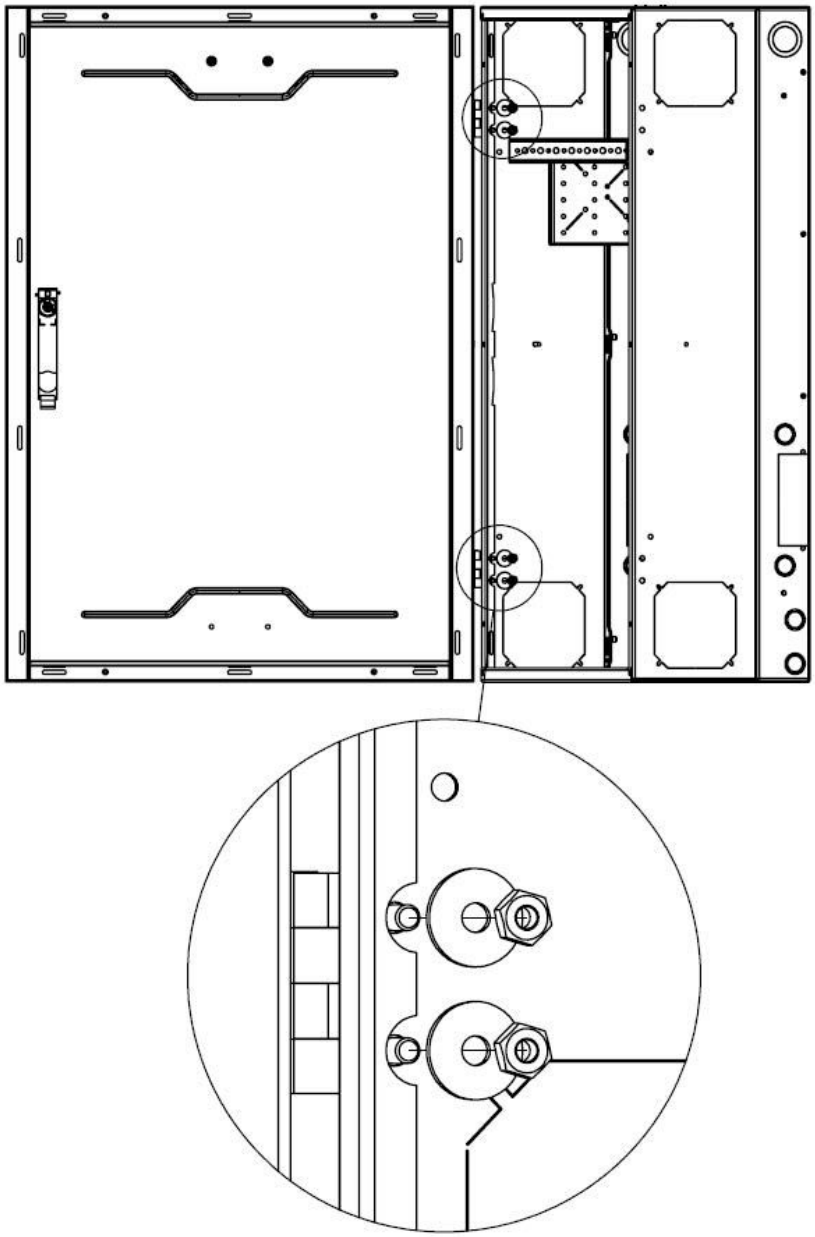

FIGURE B

REMOVING THE FULL DOOR AND TOP FROM A FULL DOOR CONFIGURATION (CONTINUED)

4. Remove (2x) 6-32 x 5/16” bonding screws from the front corners of the top as shown. (**FIGURE C**)

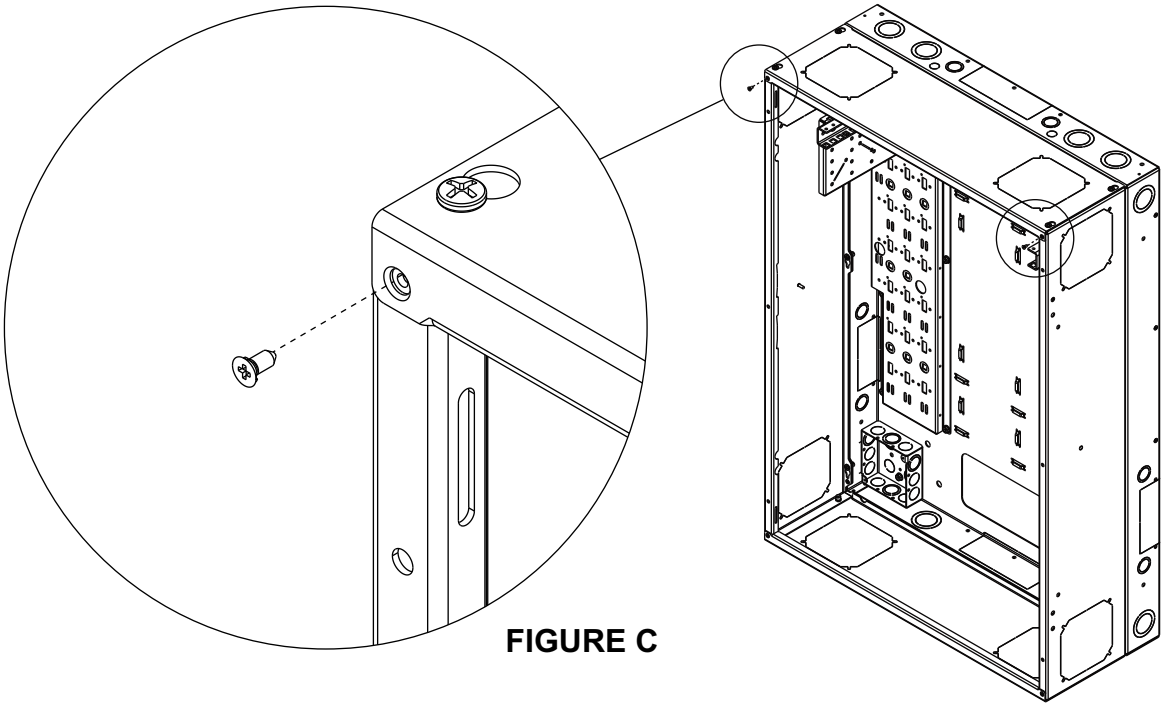

FIGURE C

5. Loosen (approximately 2 turns) the (4x) 10-32 x 1/2” screws from the top as shown. (**FIGURE D**)

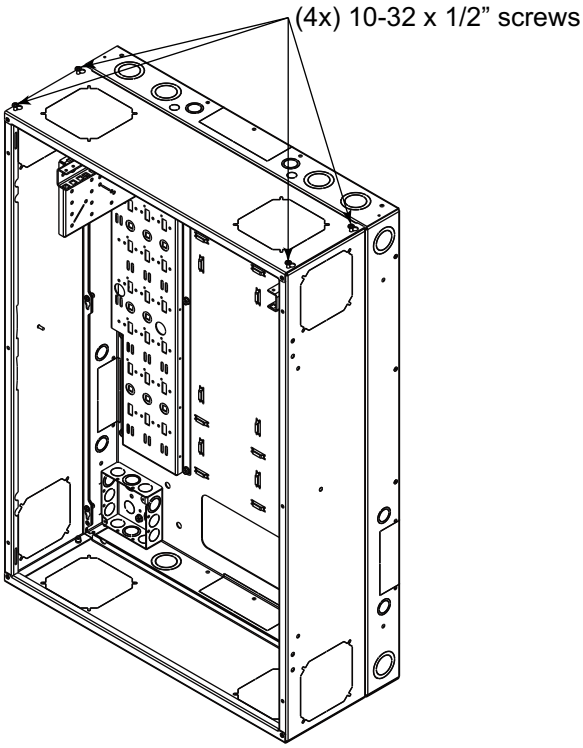

FIGURE D

REMOVING THE FULL DOOR AND TOP FROM A FULL DOOR CONFIGURATION (CONTINUED)

6. Remove the top by pulling the top towards you, and then lifting the keyholes off the loosened (4x) 10-32 x 1/2” screws as shown. (**FIGURE E**)

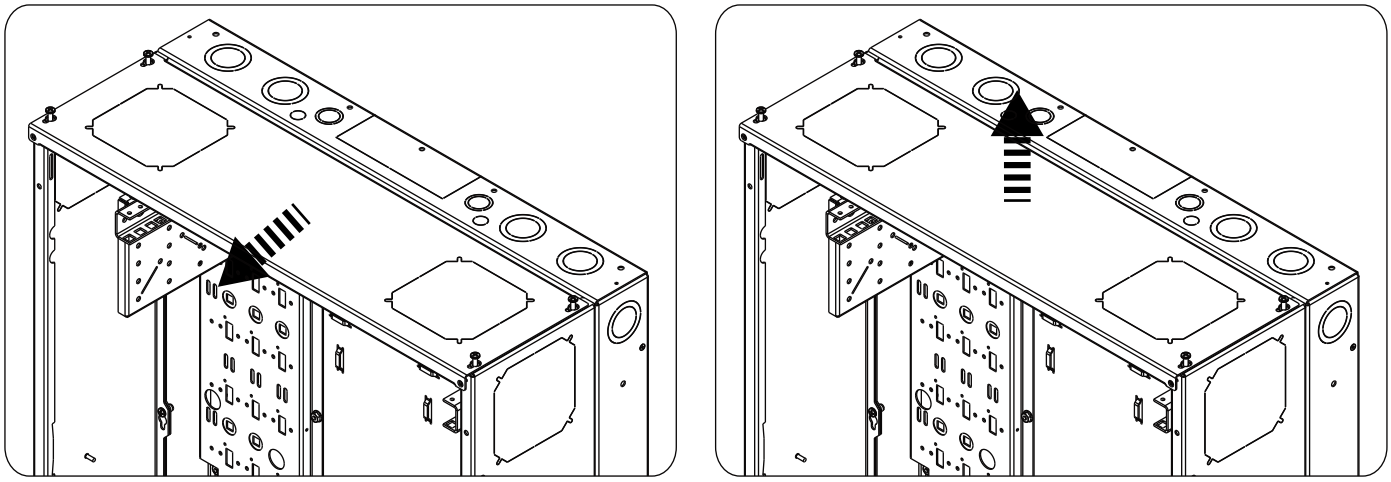

FIGURE E

REMOVING THE SPLIT AND FRONT DOOR FROM A SPLIT DOOR CONFIGURATION

NOTE: It may be helpful to remove either the split and/or the front door before mounting the backpan and installing any equipment.

1. Remove (3x) 6-32 Torx security bonding screws from each side of the split door as shown. (**FIGURE F**)

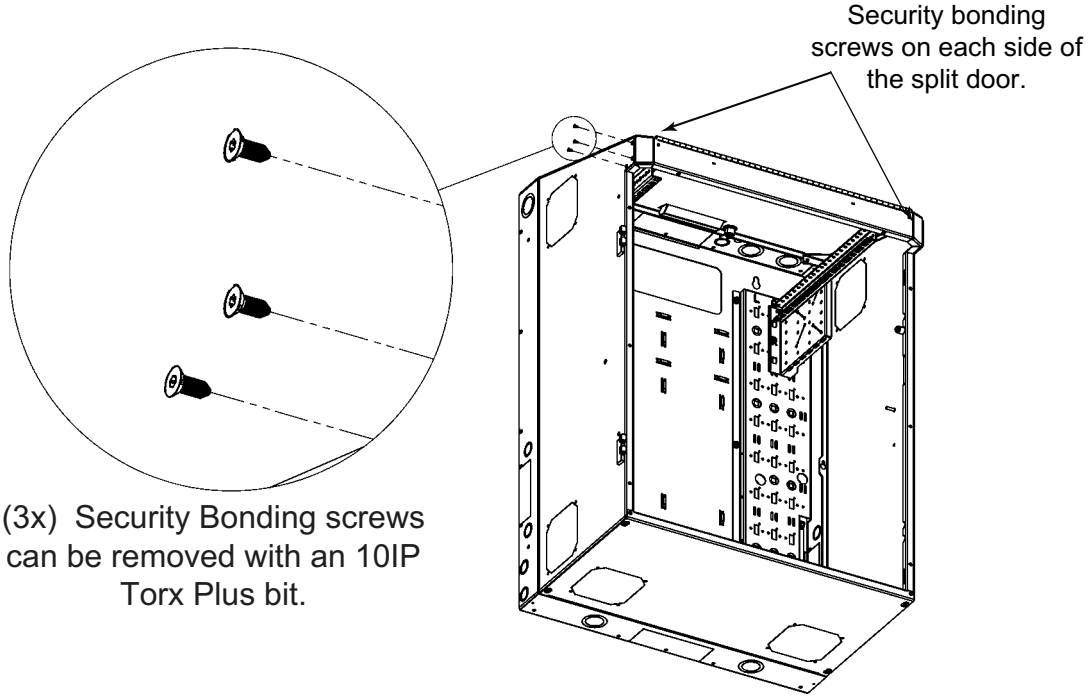

FIGURE F

2. Carefully remove the split door and set it aside for reinstallation. (**FIGURE G**)

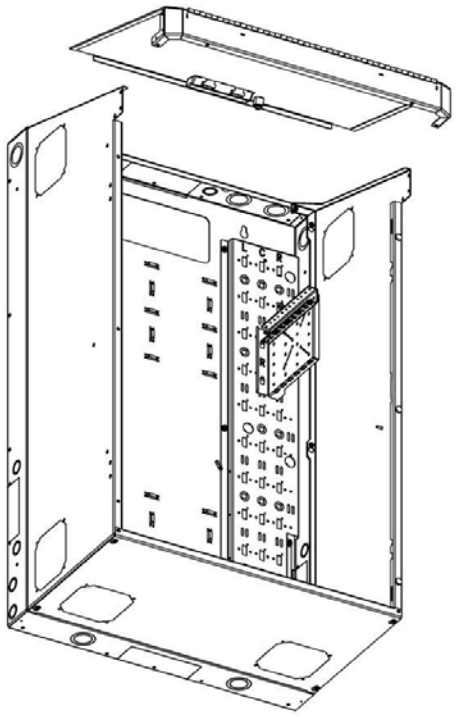

FIGURE G

REMOVING THE SPLIT AND FRONT DOOR FROM A SPLIT DOOR CONFIGURATION (CONT'D.)

3. Open the front door to 90º.
4. Use the quick disconnnect on the door bonding wire to free the connection between the front door bonding stud and the extender bonding stud. (**FIGURE H**)

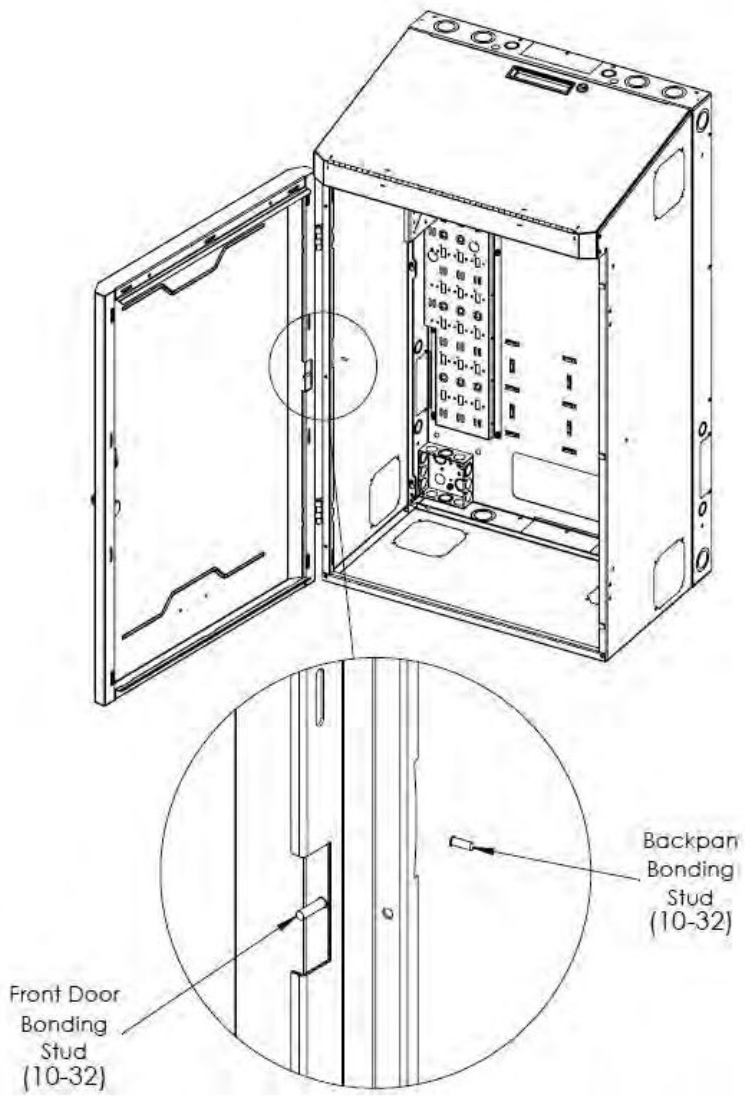

FIGURE H

CAUTION: The bonding wire must be used when reattaching the door to ensure proper bonding.
ATTENTION: Le fil de liaison doit être utilisé lorsque la porte est remis pour assurer une connexion électrique appropriée.

5. Remove the (2x) M6 nuts from each hinge (remove nuts from the bottom hinge first). (**FIGURE J**) Carefully set the full door and hardware aside for reinstallation.

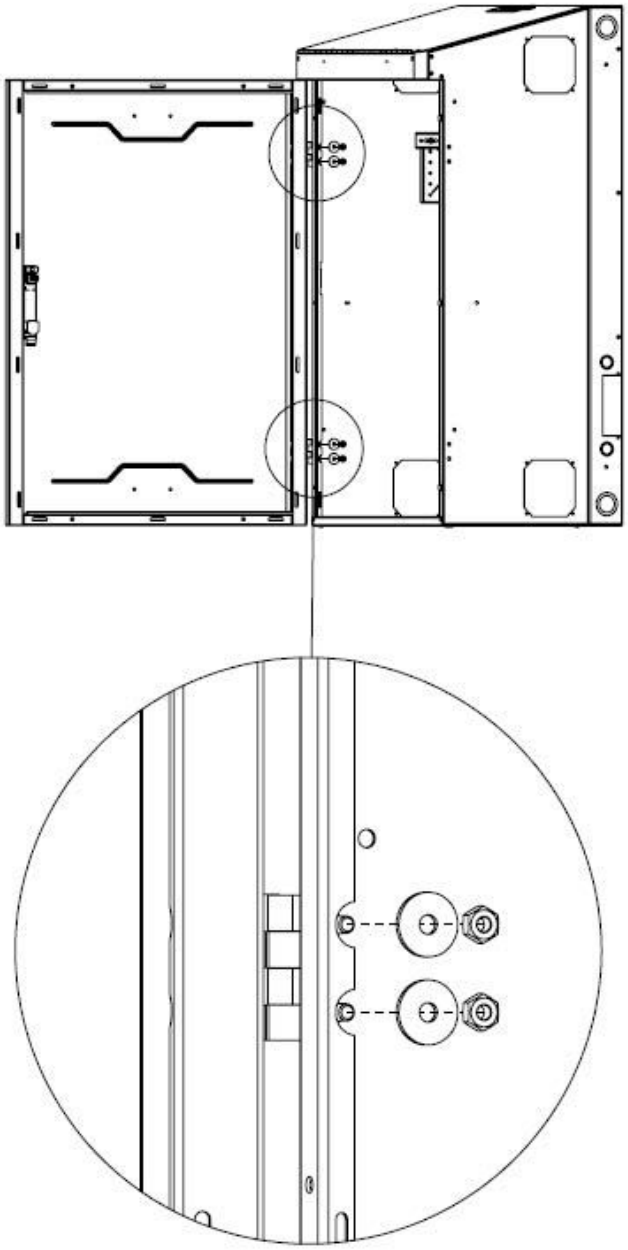

FIGURE J

REVERSING THE DOOR (IF APPLICABLE)

1. Use the quick disconnect on the door bonding wire to free the connection between the door bonding stud and the backpan bonding stud.
2. Remove the (4x) 1/4"-20 nuts and (4x) washers from the hinges (lower hinge first).
3. Carefully set aside front door.
4. Remove and attach the rubber bumpers to the holes on the opposite side of the hinges.
5. Rotate door and reattach hinges to the opposite side of the backpan (top hinge first).
6. Remove cam screw and cam. (**FIGURE K**)
7. Remove the (2x) handle screws as shown. (**FIGURE K**)
8. Rotate and reattach the handle to the door.
9. Rotate cam 180°, and reattach cam with screw (cam facing the outside of enclosure). (FIGURE K)
10. Remove the (2x) speednuts from the back of the badge and remove the badge from the door.
11. Rotate the badge and reinstall on the opposite side of the door.
12. Reattach the door bonding wire to the front door to ensure proper bonding to the backpan.

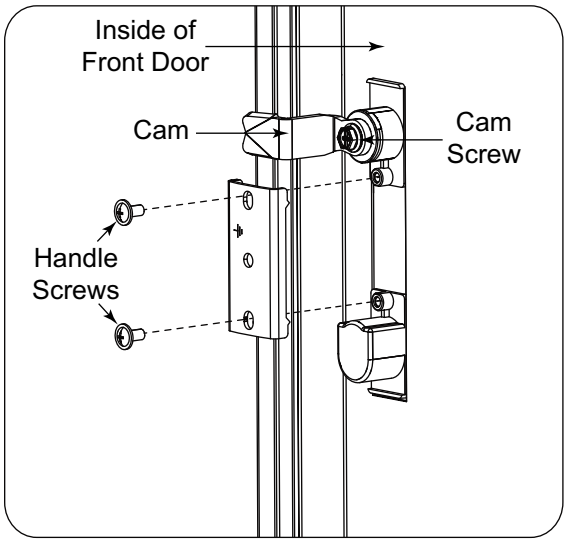

FIGURE K

CAUTION: The bonding wire must be used when reattaching the door to ensure proper bonding.
ATTENTION: Le fil de liaison doit être utilisé lorsque la porte est remis pour assurer une connexion électrique appropriée.

REMOVING EXTENDERS FROM THE BACKPAN (IF APPLICABLE)

NOTE:
- It may be helpful to remove extenders for some mounting and equipment installations. (**FIGURE L**)
- Mounting equpment in the center of the backpan is recommended when removing and reinstalling extenders. For more information, see “Relocating Fixed Position Mounting Rail or Pivot Brackets on the Backpan” on page 20.
- A longer drill bit may be required when reinstalling extenders to the backpan after mounting equiment in the center of the enclosure.

1. If you have a preinstalled door, use the previous topics to remove the door before proceeding.

NOTE: When removing extenders, do not remove the top on the full door configuration.

FIGURE L

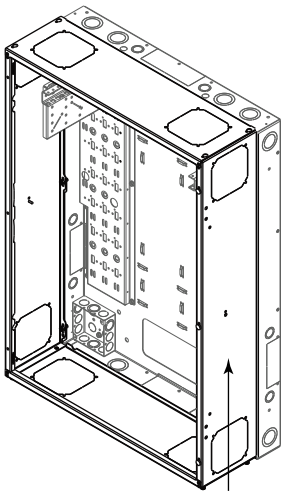

REMOVING EXTENDERS FROM THE BACKPAN (IF APPLICABLE, CONTINUED)

2. Remove the (2x) 6-32 x 5/16” bonding screws connecting the lower-back corners of the extender to the backpan as shown. (**FIGURE M**)

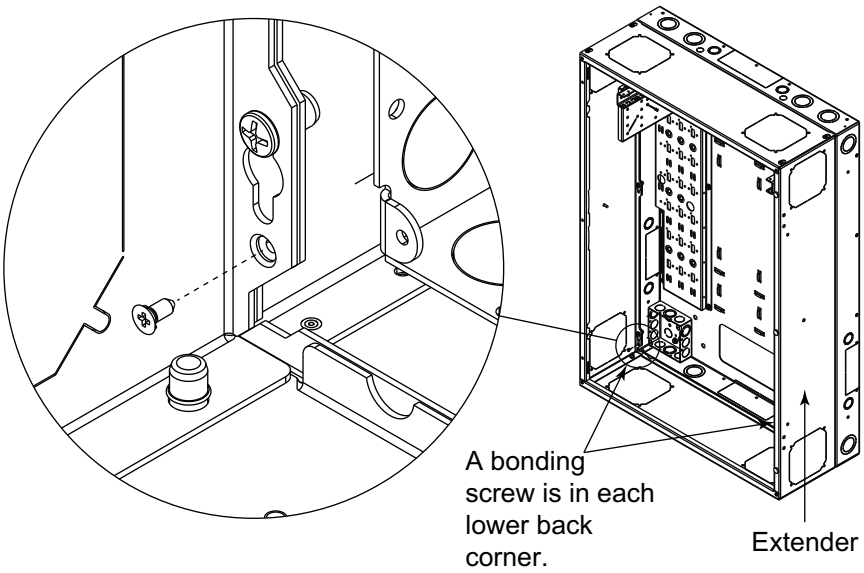

FIGURE M

CAUTION: The bonding screws must be used as explained to ensure proper bonding.
ATTENTION: Les vis doivent être utilisées comme expliqué pour assurer approprié électrique de liaison.

3. **Split door configuration only**:
   Remove the (2x) 10-32 x 1/2” screws connecting the top of the extender to the backpan as shown. (**FIGURE N**)

NOTE:
- Split door configurations have 2 extra 10-32 x 1/2” screws.
- Split door removed for clarity.

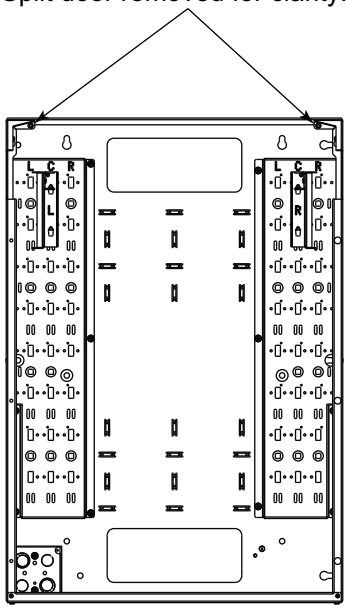

FIGURE N

4. Loosen (approximately 2 turns) the (6x) 10-32 x 1/2” screws connecting the extender to the backpan as shown. (**FIGURE P**)

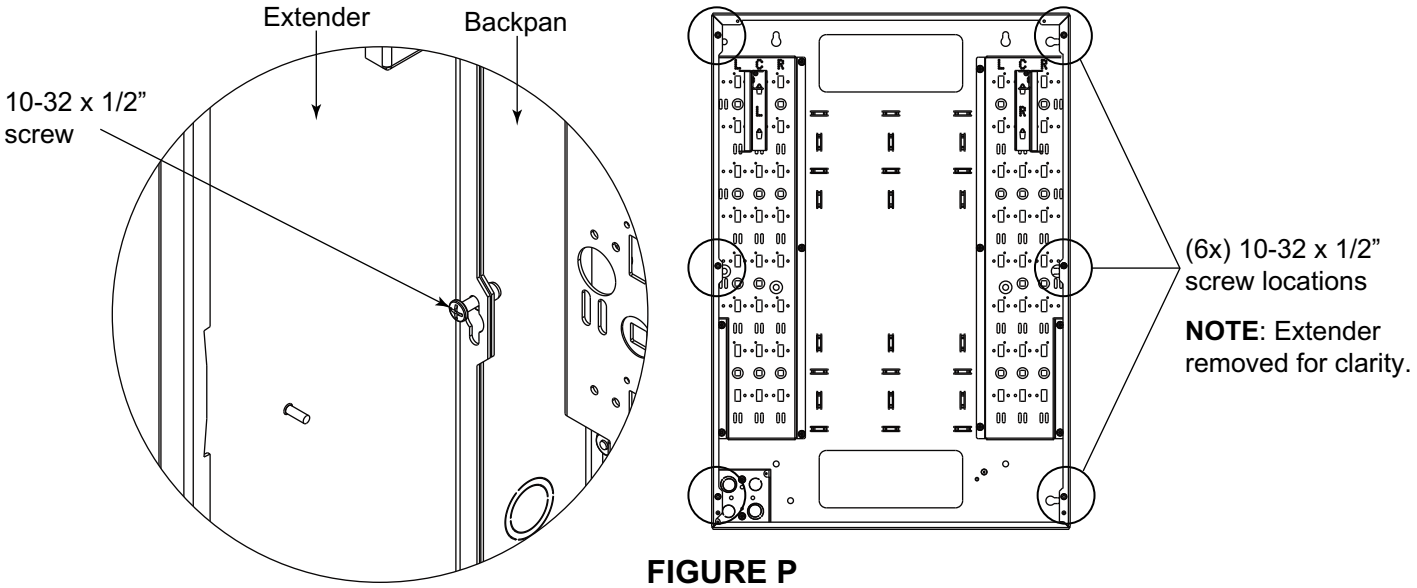

FIGURE P

5. Lift and remove the extender keyholes from the loosened screws on the backpan as shown. (**FIGURE R**)

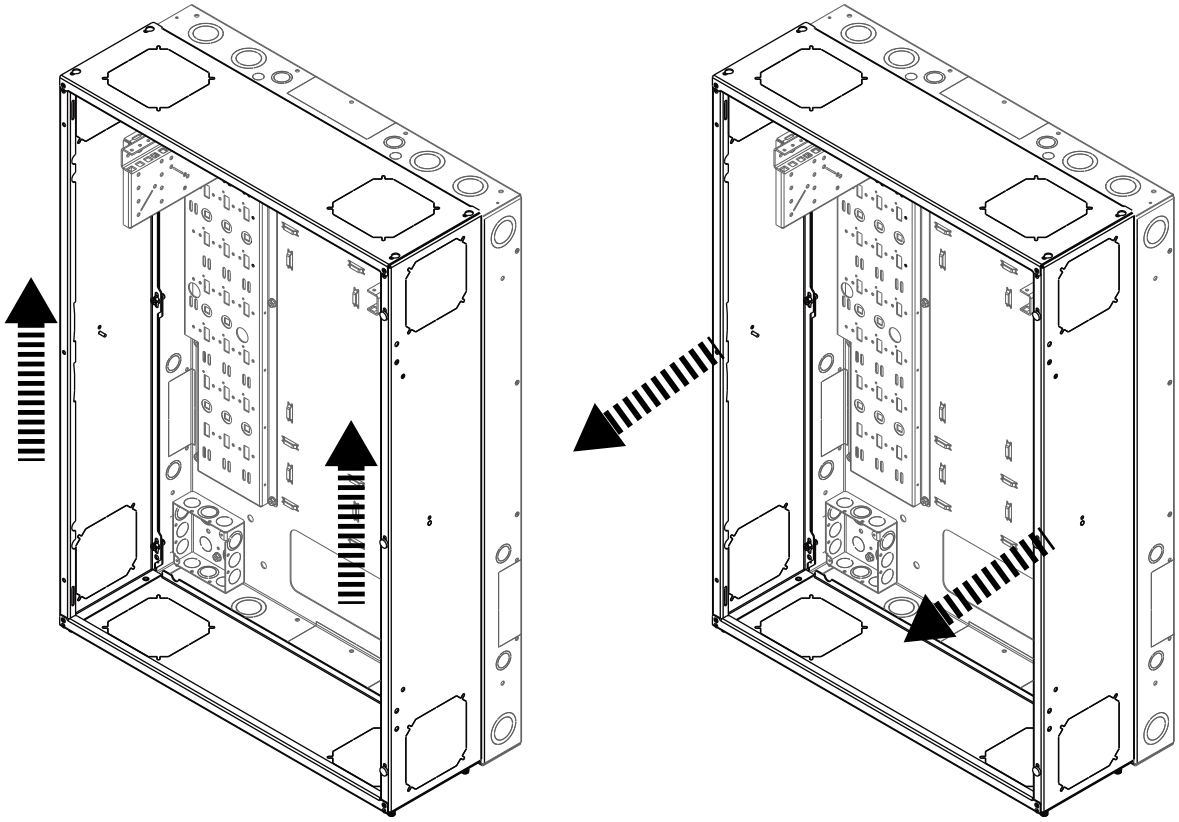

FIGURE R

MOUNTING THE BACKPAN

CAUTION: The backpan must be installed plumb and level for proper operation.
ATTENTION: La plaque profilée doit etre aplomb et de niveau pour un fonctionnement.

NOTE: When mounting the backpan:

- Ensure the backpan is screwed to the studs. (**FIGURE S**)
- Use 3/8" diameter lag bolts with a minimum length of 2" and standard flat washers for hardware (not provided).
- The standard flat washers must be installed under the lag bolt heads.
- The backpan must be mounted using all 6 mounting points. (**FIGURE T**)

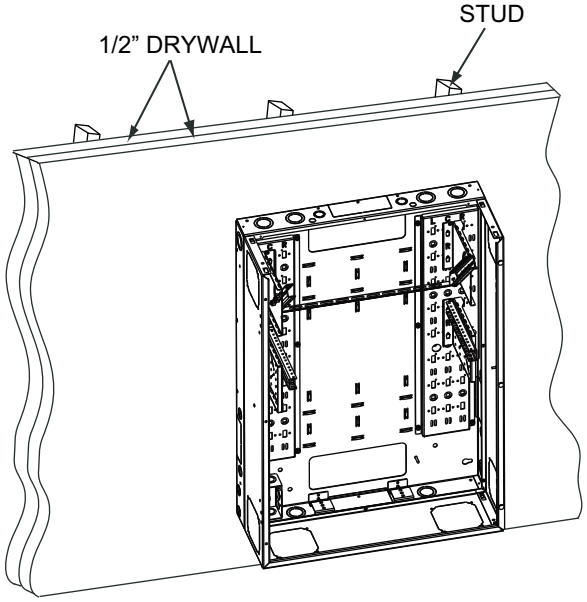

FIGURE S

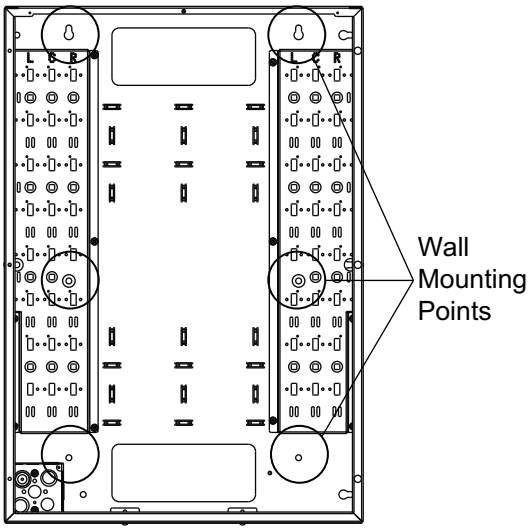

FIGURE T

1. Install one of the top mounting bolts. Do not tighten. (**FIGURE S**)
2. Check for plumb and level before installing the second top mounting bolt. Tighten both bolts.
3. Install the remaining mounting bolts.

GROUNDING AND BONDING

Protective Earth Terminals (PET) are located in the backpan of the wall rack. These terminals are marked with the symbol ⏚. Wall rack parts, center section, door, and fans contain or are provided with bonding points for connection to the PET. Protective earth and bonding connections shall be in accordance with Article 250 of the National Electric Code.

The main protective earth ground needs to be the first terminal placed on the PET and this terminal needs to be secured on its own with a nut. (**FIGURE U**)

NOTE:
- The backpan PET stud is on the lower-right (facing) of the backpan on both the full door and split door options.
- The door bonding stud is on the hinge side of both the full door and split door options.
- Additional bonding hardware is provided with optional components.

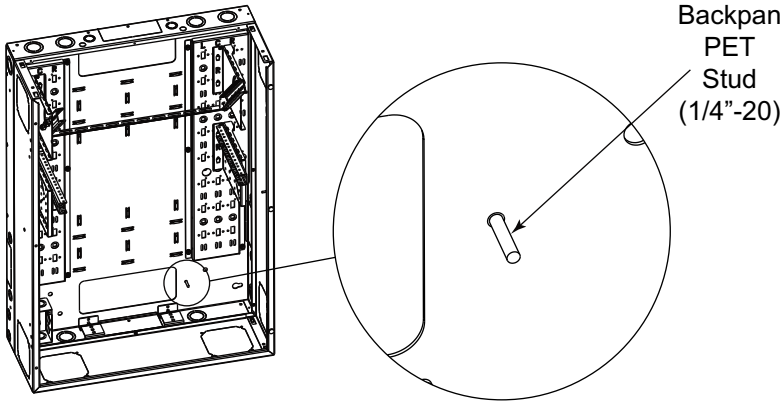

FIGURE U

OPTIONAL CONNECTING 4” AC FAN TO BONDING POINTS

1. Use the locking nut (N) to connect the first eyelet on the bonding wire (P) to a bonding point on either side of the extender’s interior as shown. (**FIGURE V**)
2. Use the M4 screws (R) to connect the second and third bonding wire eyelets to the ground points (GND) on each 4” AC fan option (not provided, sold separately). (**FIGURE V**)

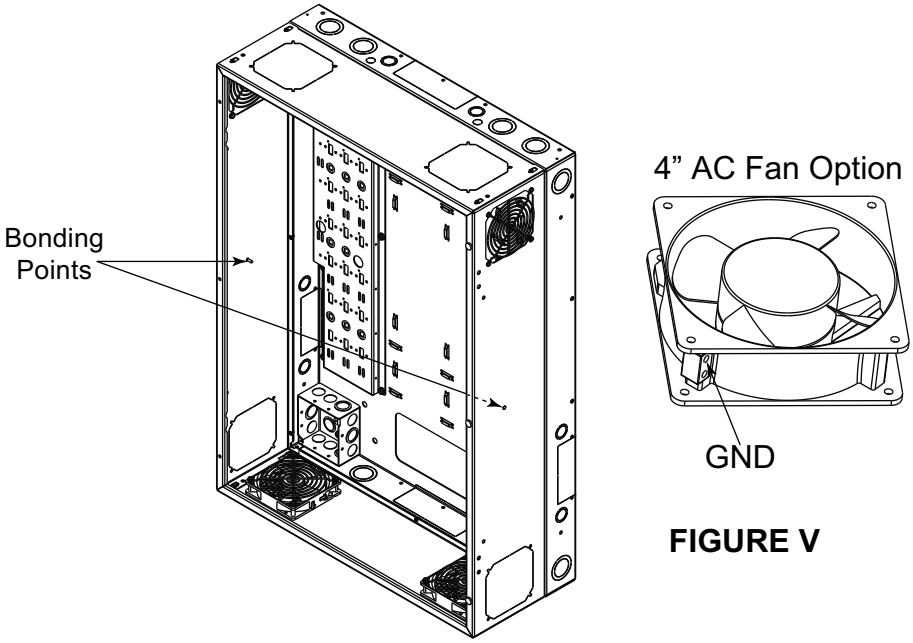

FIGURE V

NOTE:
- Follow installation steps as described in the instructions provided with your 4” AC fan option.
- For more information, see "Venting The Enclosure Actively With A Full Door Configuration" or "Venting The Enclosure Actively With A Split Door Configuration," on pages 26 and 28, respectively.

CAUTION: The bonding wire must be used when connecting AC fans to ensure proper bonding.
ATTENTION: Le fil de liaison doit être utilisé lors de la connexion des AC ventilateurs pour assurer une connexion électrique appropriée.

RELOCATING RACKRAILS ON THE FIXED POSITION MOUNTING RAIL BRACKETS

NOTE:
- The fixed position mounting rail bracket option (VWM-RR-XRU) will be factory installed.
- The rackrails have 10-32 and cagenut sides for convenience.

1. Use (2x) 10-32 screws and (2x) 10-32 nuts in the outermost holes to remove and reattach rackrails to the inside of mounting rail brackets. There are 4 horizontal, vertical, and diagonal (45º) positions available. (**FIGURE W**)

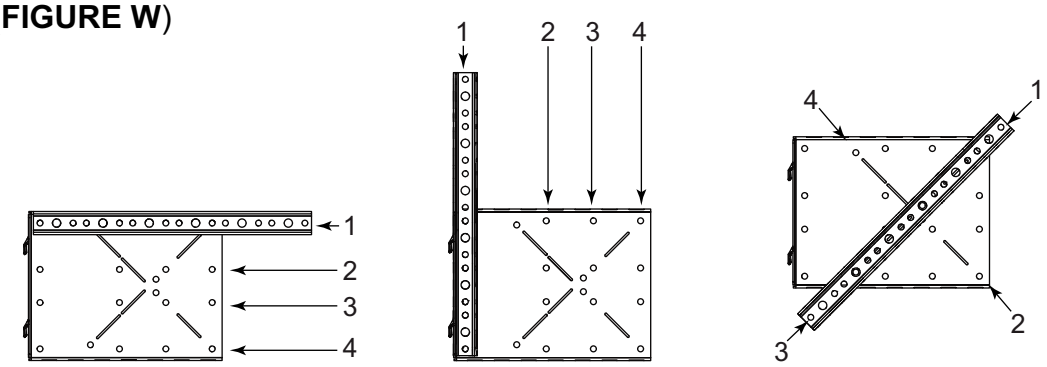

(4x) Horizontal Positions (4x) Vertical Positions (4x) Diagonal (45º) Positions

FIGURE W

2. Repeat the process with a second rackrail and the other fixed position mounting rail bracket.

ROTATING PIVOTING BRACKET RACKRAILS FROM 10-32 TO CAGENUT (IF DESIRED)

Optional: Pivoting mounting rail bracket (VWM-PIV-XRU).

1. Remove the wing nuts and 5/16”-18 nuts from the studs. (**FIGURE X**)

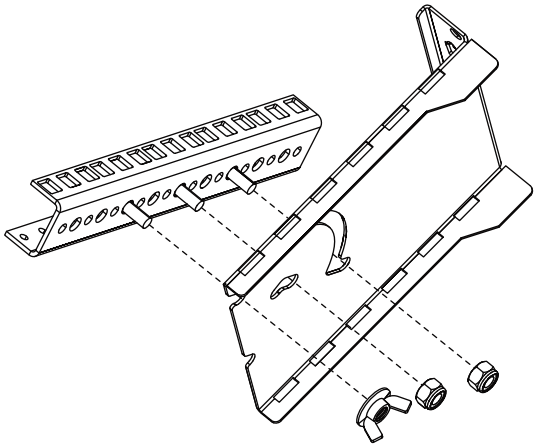

FIGURE X

2. Rotate the rackrails so the cagenut holes are positioned for use.
3. Reattach wing nuts and 5/16”-18 nuts to the studs on both rackrails.

NOTE: Leave the 5/16”-18 nuts loose enough so the rackrails pivot on the brackets.

RELOCATING FIXED POSITION MOUNTING RAIL OR PIVOT BRACKETS ON THE BACKPAN

NOTE:

- The fixed position mounting rail bracket (VWM-RR-XRU) factory installed and the pivoting mounting rail bracket option (VWM-PIV-XRU).
- Consider your equipment's power and cabling requirements to determine a left, center, or right bracket alignment. Preinstalled brackets are in the center position.
- Fixed position mounting rail and pivoting bracket pairs are labeled left (L) and right (R).

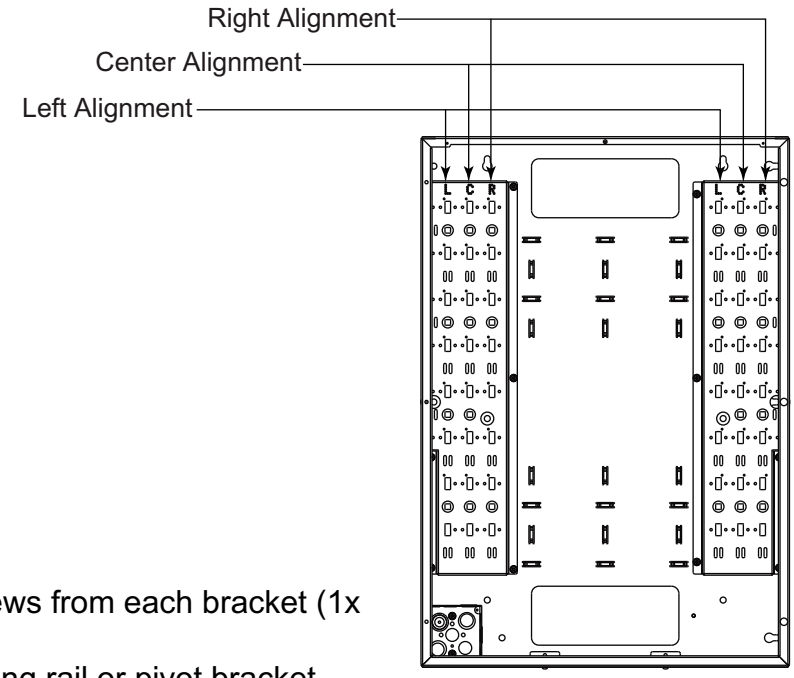

FIGURE Y

1. Remove the (2x) 6-32 x 5/16" bonding screws from each bracket (1x per bracket).
2. Remove and reattach fixed position mounting rail or pivot bracket pairs to labeled columns on the backpan for left (column L), center (column C), and right (column R) alignment of your equipment. (**FIGURE Y**)
3. Reattach the bonding screws (1x per bracket) to ensure proper bonding.

CAUTION: The bonding screws must be used as explained to ensure proper bonding.
ATTENTION: Les vis doivent être utilisées comme expliqué pour assurer approprié électrique de liaison.

USING THE PIVOTING MOUNTING RAIL BRACKETS

NOTE: Installing pivoting mounting rail bracket option (VWM-PIV-XRU).

1. Loosen the wing nuts on both sides of the rackrail, lift, and rotate the assembly from the in-use to punch down and service position. Tighten the wing nuts. Do not overtighten. (**FIGURE Z**)

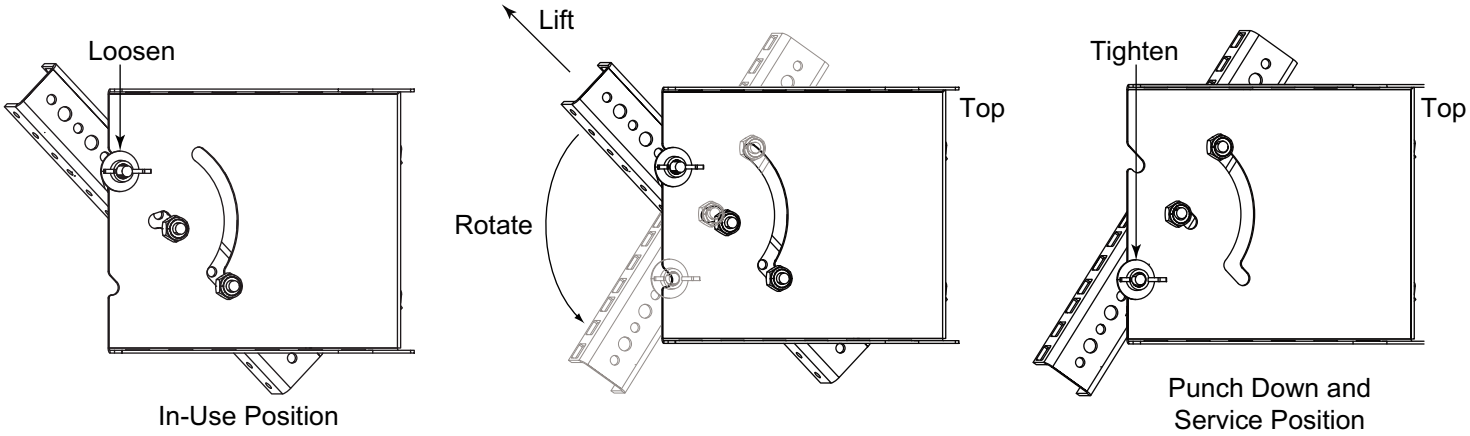

FIGURE Z

2. When rotating, the bottom of the mounted component(s) swing forward for easier access to the connection points.

3. Use (2) 10-32 x 3/4” screws to attach the lacer bar. (**FIGURE AA**)

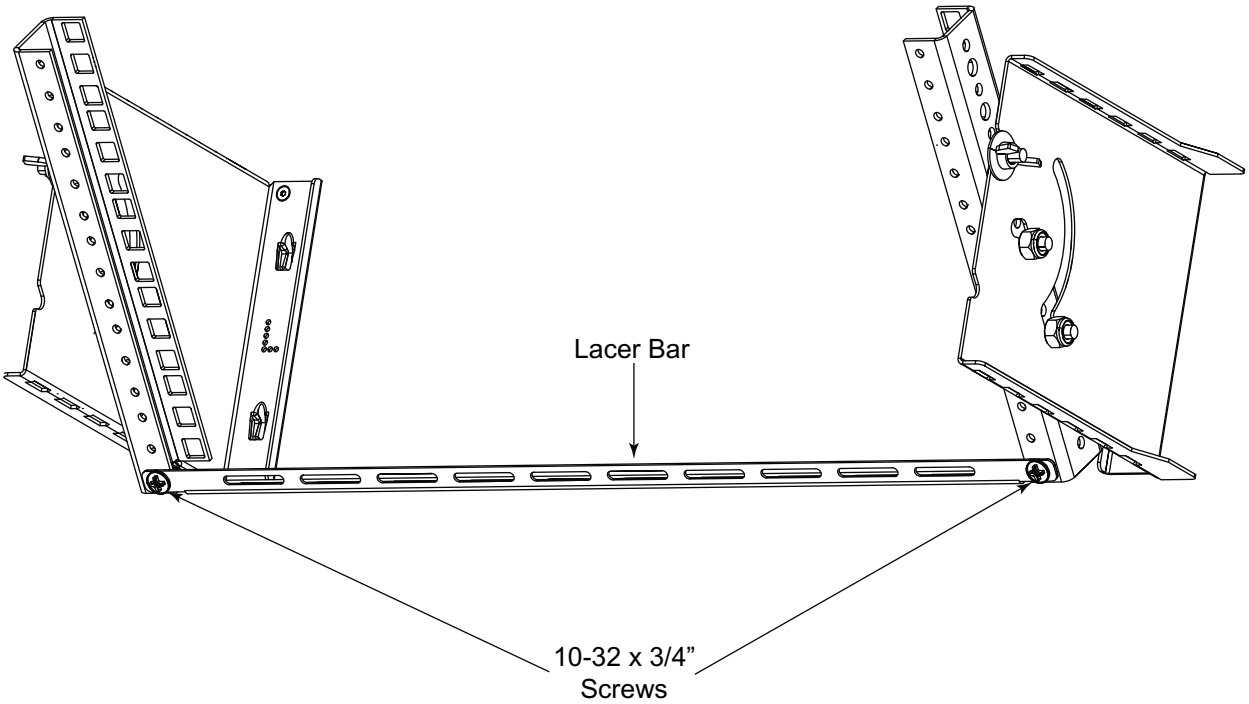

FIGURE AA

RELOCATING THE OPTIONAL BACKPAN LEVER LOCK™

NOTE: The Lever Lock™ backpan (VWMBPLL) is optional.

1. Press the clip on one corner to remove the Lever Lock backpan plate from the brackets. (**FIGURE AB**)

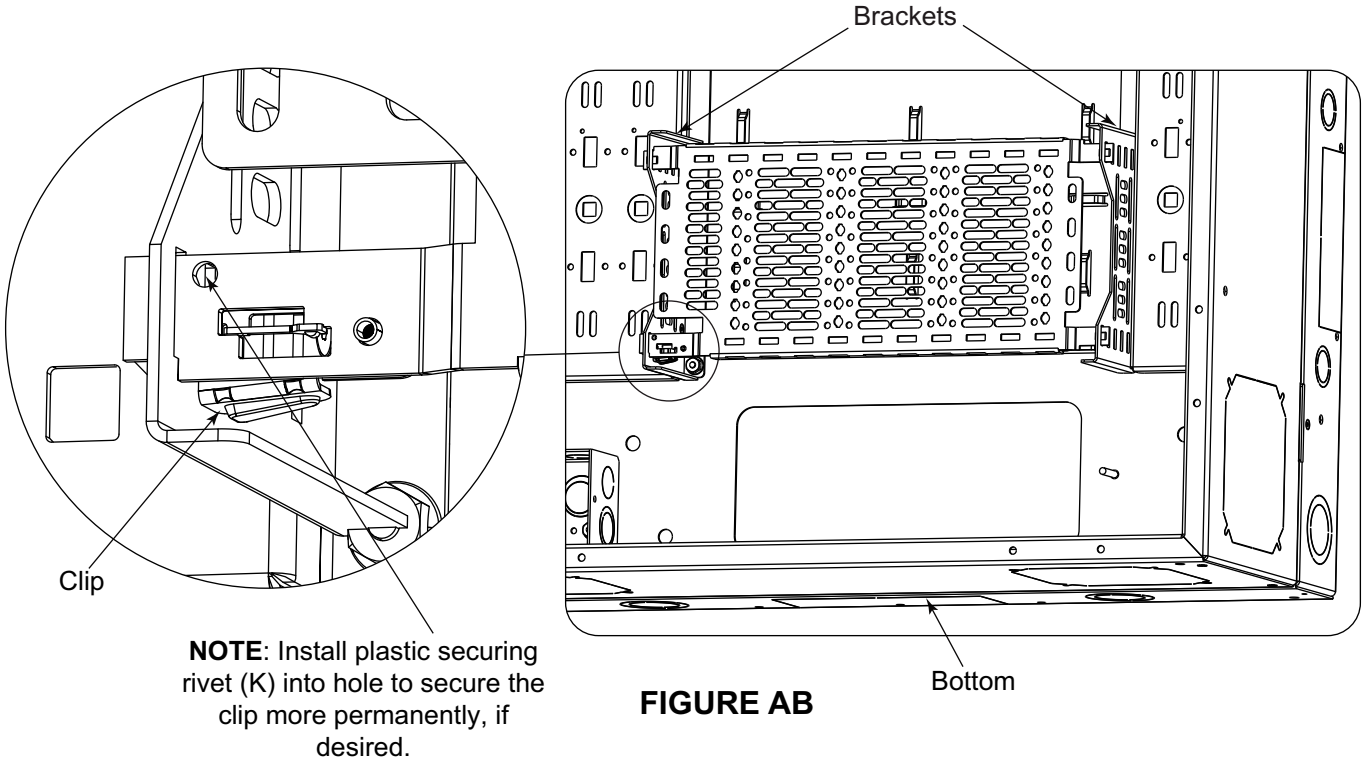

FIGURE AB

NOTE: (20x) Lever Lock plate washers (L) are provided for equipment mounting convenience.

2. Remove (4x) 6-32 x 5/16” bonding screws (2x per side) to relocate brackets into any of the following backpan locations. (**FIGURE AC**)

CAUTION: The bonding screws must be used as explained to ensure proper bonding.
ATTENTION: Les vis doivent être utilisées comme expliqué pour assurer approprié électrique de liaison.

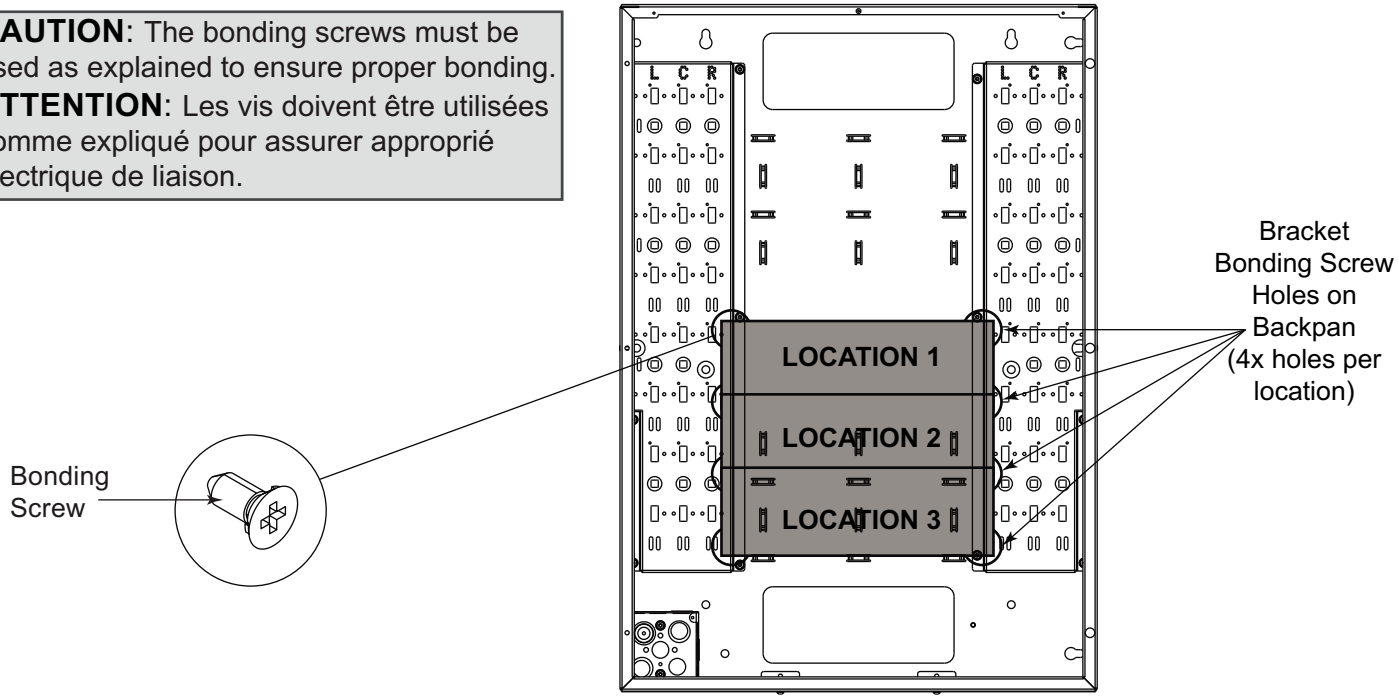

FIGURE AC

NOTE:

- The bracket bonding screw holes are located on the inside edges of the backpan. Each bracket is assembled as shown. (**FIGURE AD**)

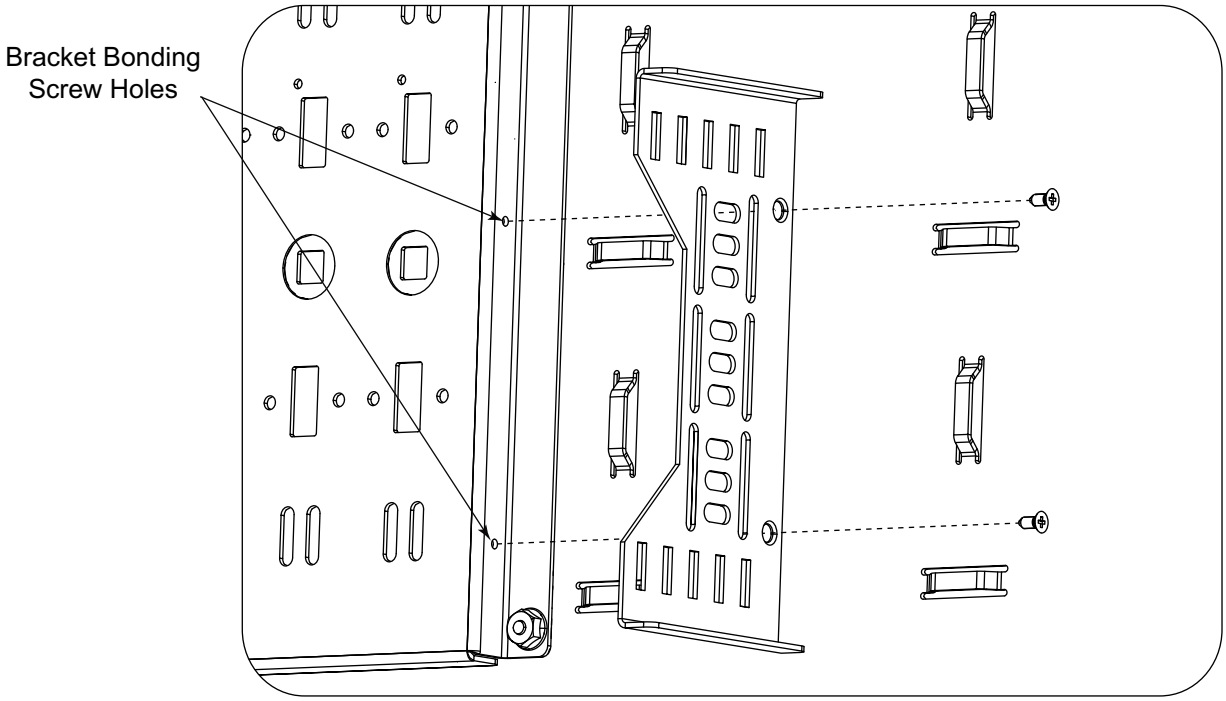

FIGURE AD

- Reattach the Lever Lock backpan plate by installing the side without the clip into the brackets first. Then install the side with the clip until it clicks into place. (**FIGURE AE**)

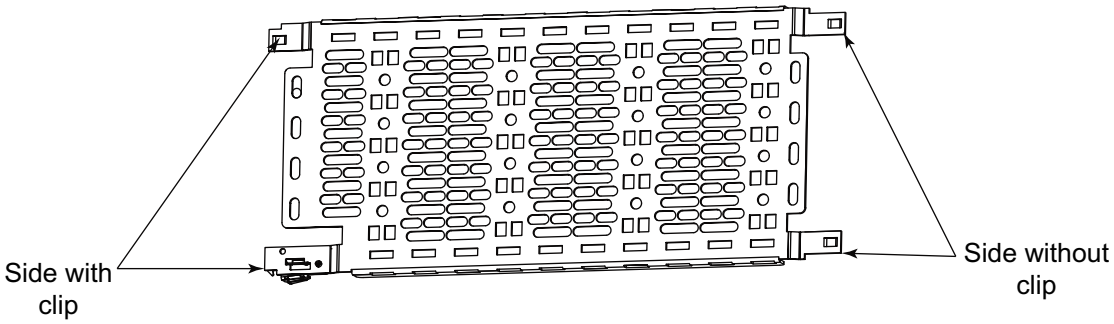

FIGURE AE

- The Lever Lock backpan plate may be installed on the brackets at different depths. All 4 corners of the Lever Lock backpan plate must be inserted into the brackets at the same depth in order to function correctly.

VENTING THE ENCLOSURE PASSIVELY WITH A FULL DOOR CONFIGURATION

NOTE: There are 8 knockout locations available on your full door enclosure for a variety of ventilation configurations. (**FIGURE AF**)

The configuration used in this topic provides an example.

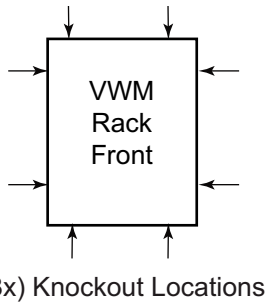

FIGURE AF

1. Use a hammer to knock out the 4 plates as shown. (**FIGURE AG**)

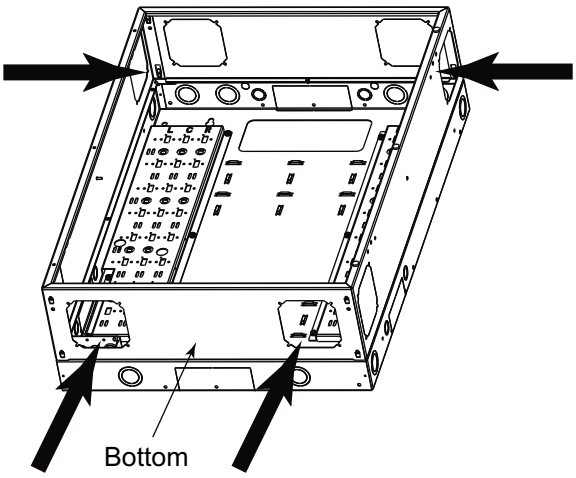

FIGURE AG

2. Install a vent guard into each of the 4 openings (from the outside into the enclosure) using a guard (A), (4x) 6-32 x 3/8” screws (M), and (4x) 6-32 flange nuts (B) in each location. (**FIGURE AH**)

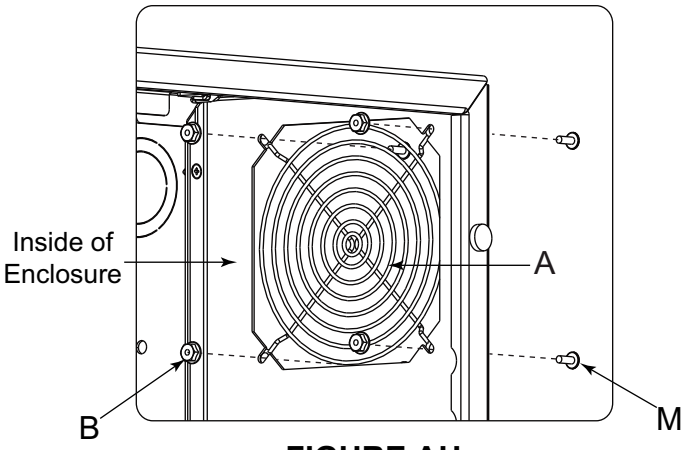

FIGURE AH

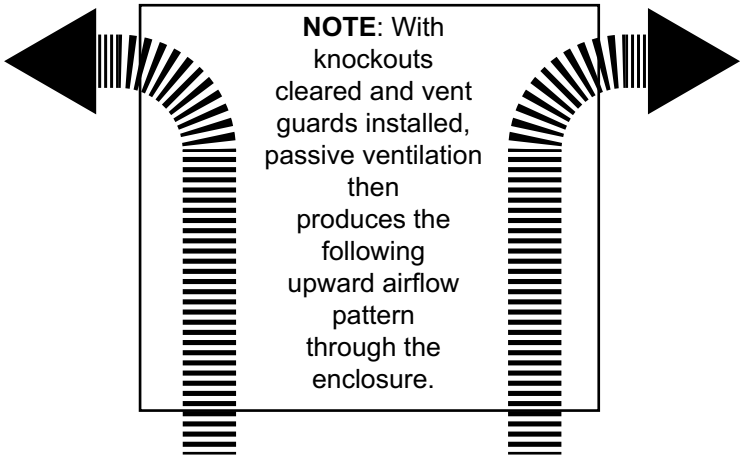

VENTING THE ENCLOSURE ACTIVELY WITH A FULL DOOR CONFIGURATION

NOTE: There are 8 knockout locations available on your full door enclosure for a variety of ventilation configurations. (**FIGURE AJ**)

The configuration used in this topic provides an example.

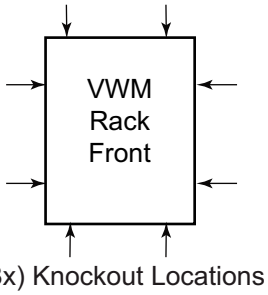

FIGURE AJ

1. Use a hammer to knock out the 4 plates as shown. (**FIGURE AK**)

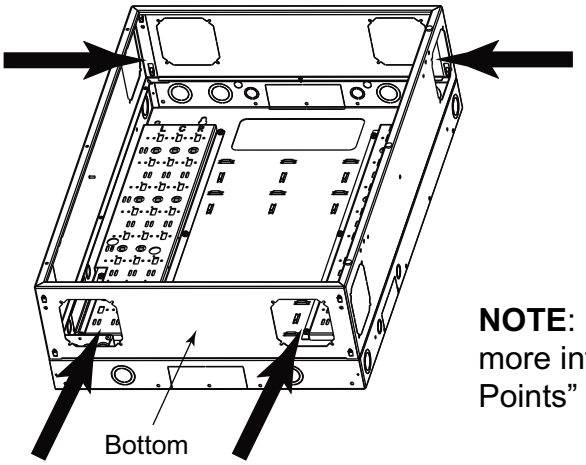

FIGURE AJ

2. Install any 4” AC fan option (not provided, sold separately) into each of the 2 openings on the bottom of the rack using a fan, (4x) screws and (4x) nuts from the hardware provided with your fan. (**FIGURE AL**)

NOTE: If using a 4” AC fan option, be sure to bond it correctly. For more information, see “Connecting 4” AC Fan Options to Bonding Points” on page 18.

3. Install a vent guard into each of the 2 openings on the top sides of the rack (from the outside into the enclosure) using a guard (A), (4x) 6-32 x 3/8” screws (M), and (4x) 6-32 flange nuts (B) in each location. (**FIGURE AH**)

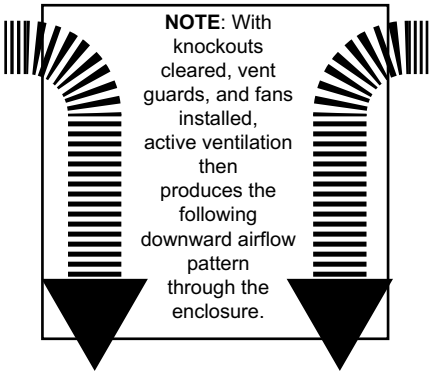

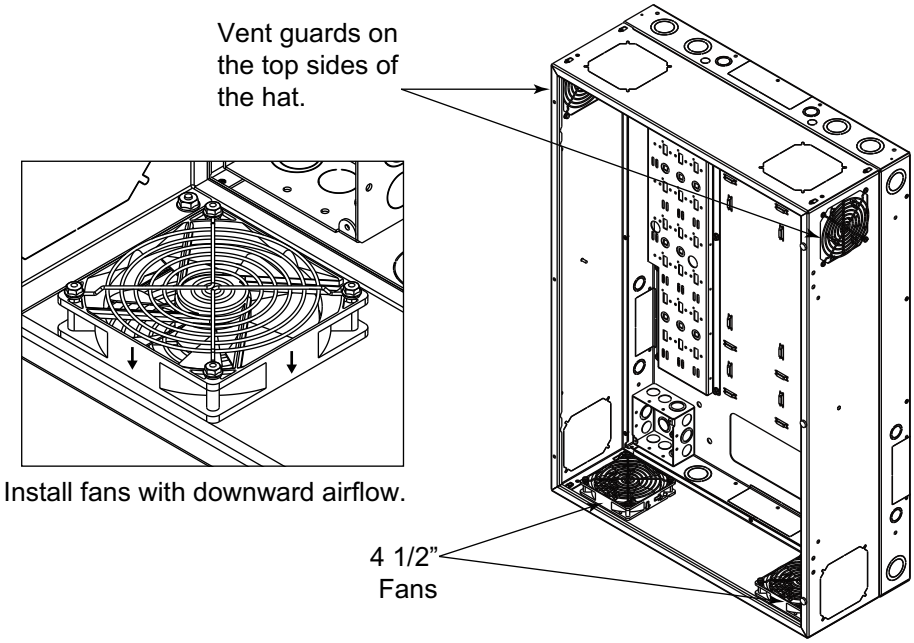

FIGURE AL

VENTING THE ENCLOSURE PASSIVELY WITH A SPLIT DOOR CONFIGURATION

NOTE: There are 6 knockout locations available on your split door enclosure for a variety of ventilation configurations. (**FIGURE AM**)

The configuration used in this topic provides an example.

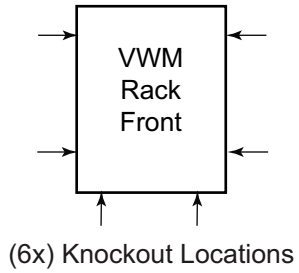

FIGURE AM

1. Use a hammer to knock out the 4 plates as shown. (**FIGURE AN**)

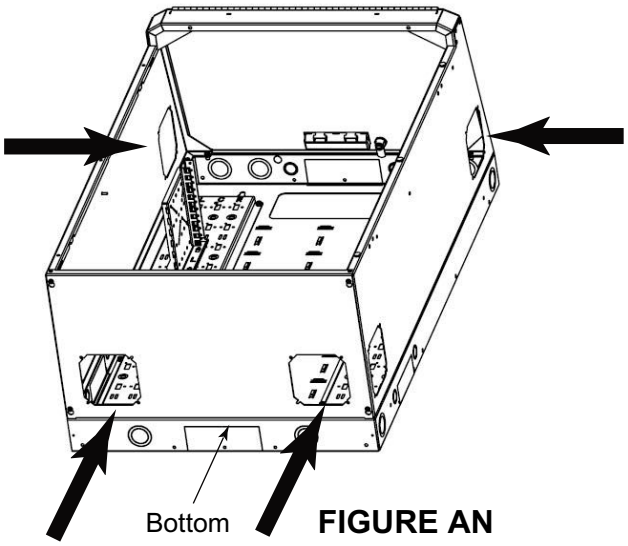

FIGURE AN

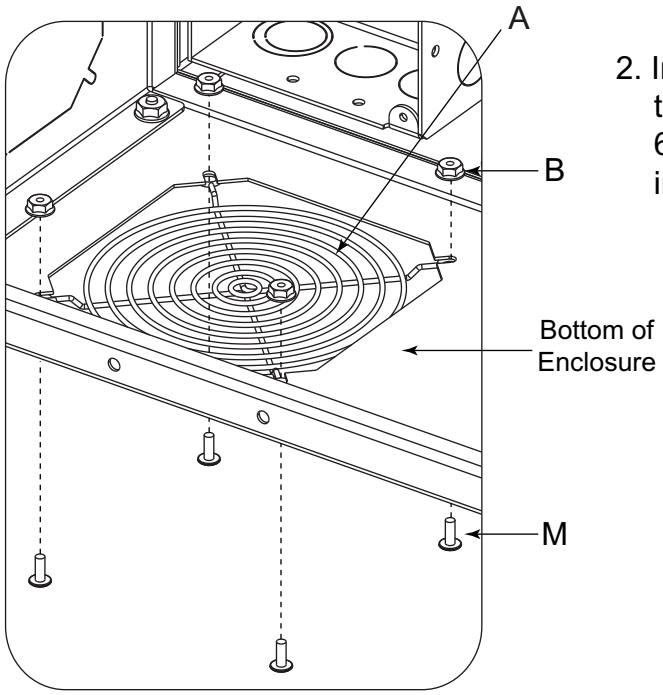

FIGURE AP

2. Install a vent guard into each of the 4 openings (from the outside into the enclosure) using a guard (A), (4x) 6-32 x 3/8” screws (M), and (4x) 6-32 flange nuts (B) in each location. (**FIGURE AP**)

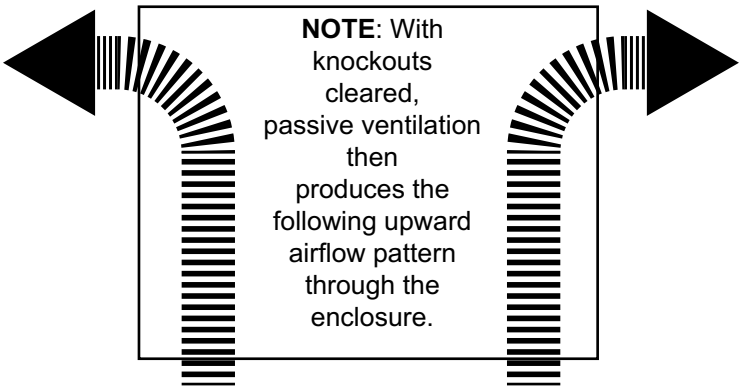

VENTING THE ENCLOSURE ACTIVELY WITH A SPLIT DOOR CONFIGURATION

NOTE: There are 6 knockout locations available on your split door enclosure for a variety of ventilation configurations. (**FIGURE AR**)

The configuration used in this topic provides an example.

1. Use a hammer to knock out the 4 plates as shown. (**FIGURE AS**)

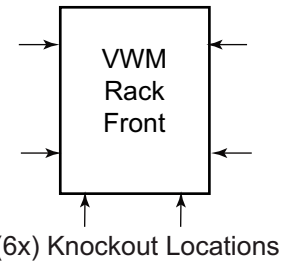

FIGURE AR

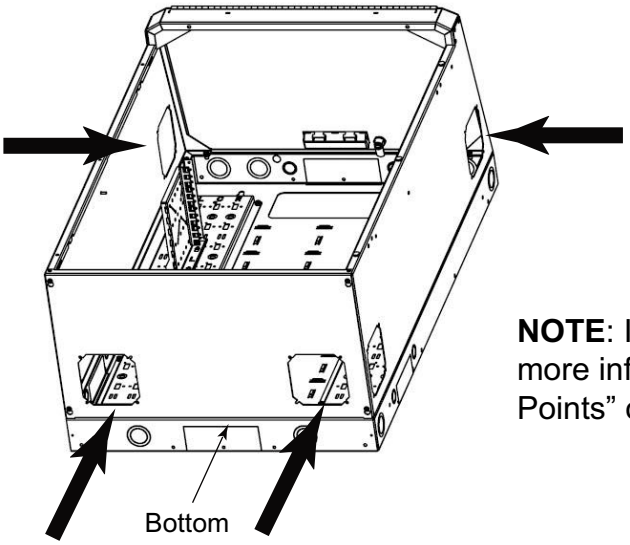

FIGURE AS

2. Install any 4” AC fan option (not provided, sold separately) into each of the 2 openings on the bottom of the rack using a fan, (4x) screws and (4x) nuts from the hardware provided with your fan. (**FIGURE AT**)

NOTE: If using a 4” AC fan option, be sure to bond it correctly. For more information, see “Connecting 4” AC Fan Options to Bonding Points” on page 18.

3. Install a vent guard into each of the 2 openings on the top sides of the rack (from the outside into the enclosure using a guard (A), (4x) 6-32 x 3/8” screws (M), and (4x) 6-32 flange nuts (B) in each location. (**FIGURE AH**)

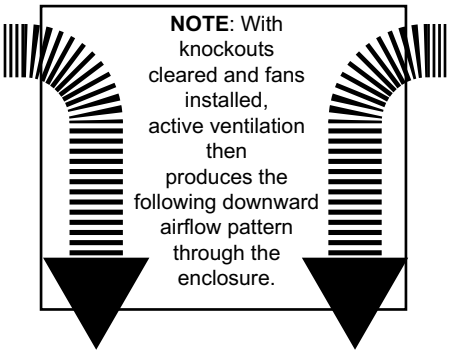

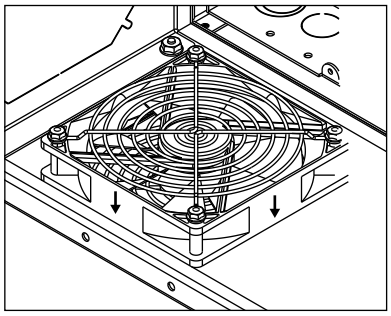

Install fans with downward airflow.

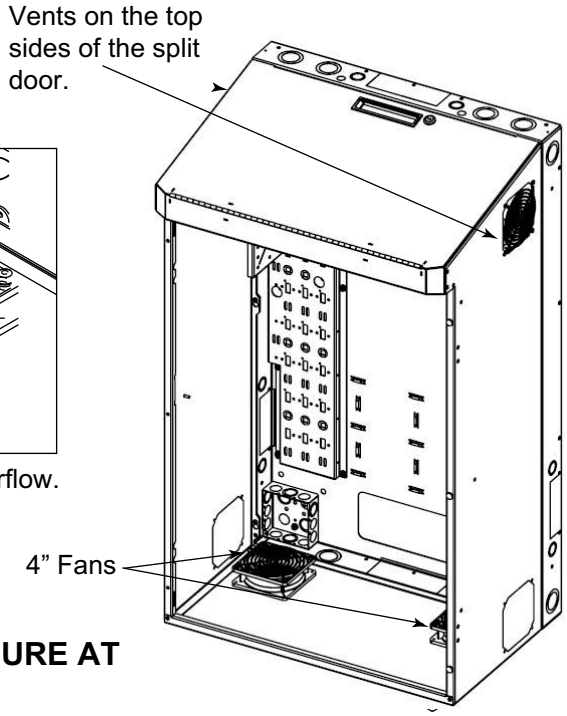

FIGURE AT

INSTALLING THE POWER MOUNTING BRACKET

NOTE:

- Before installing the power mounting bracket to the backpan, install the clip included with your PDU to the bracket using the 10-32 nut and screw provided with your PDU.
- PDU products are sold separately.
- The power mounting bracket may be installed in a variety of configurations. The following procedures are meant to provide some examples.

Installing Vertically to the Backpan

Use a 10-32 x 3/8” screw (G) to install the power mounting bracket vertically to the backpan with outlets facing forward or inside the enclosure as shown. (**FIGURE AU and AV, respectively**)

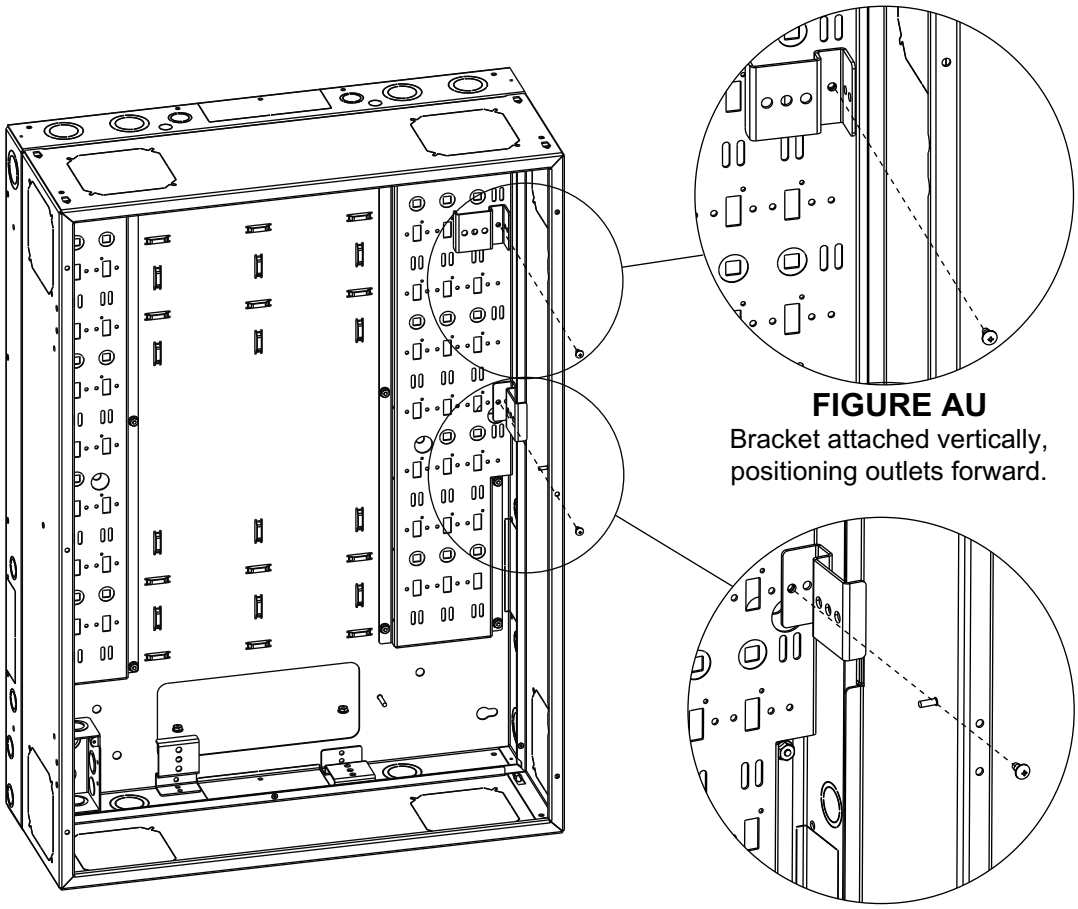

FIGURE AU
Bracket attached vertically, positioning outlets forward.

FIGURE AV
Bracket attached vertically, positioning outlets inside.

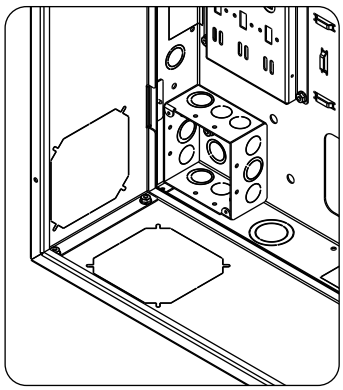

NOTE: A junction box is also included in the lower-left of the enclosure.

NOTE:

- Before installing the power mounting bracket to the backpan, install the clip included with your PDU to the bracket using the 10-32 nut and screw provided with your PDU.
- PDU products are sold separately.
- The power mounting bracket may be installed in a variety of configurations. The following procedures are meant to provide some examples.

Installing Horizontally to the Bottom of the Backpan

Use a 10-32 x 3/8” screw (G) and a 10-32 flange nut (F) to install the power mounting bracket horizontally to the bottom of the backpan with outlets facing upward or forward as shown. (**FIGURE AW and AX, respectively**)

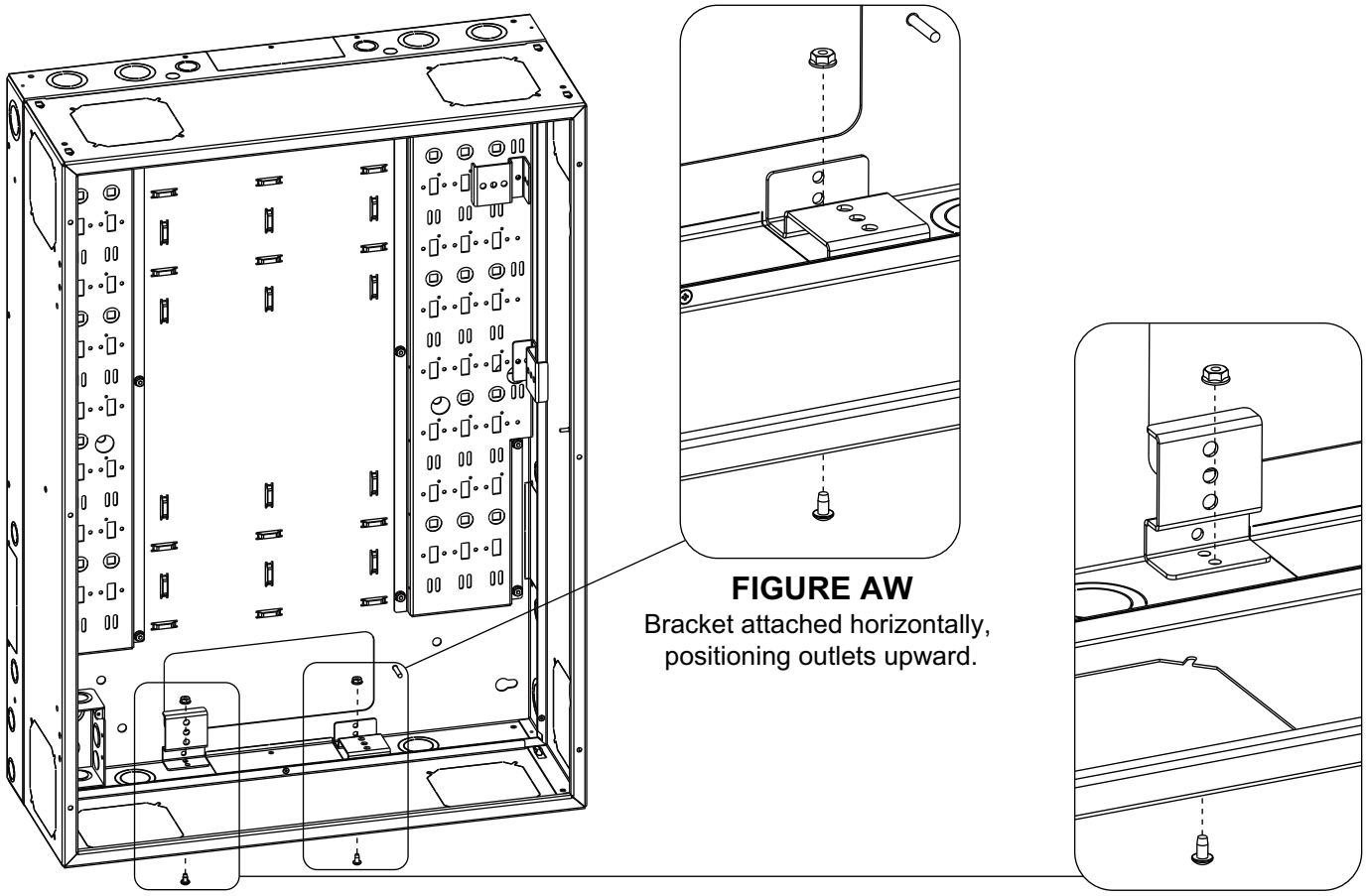

FIGURE AW
Bracket attached horizontally, positioning outlets upward.

FIGURE AX
Bracket attached horizontally, positioning outlets forward.

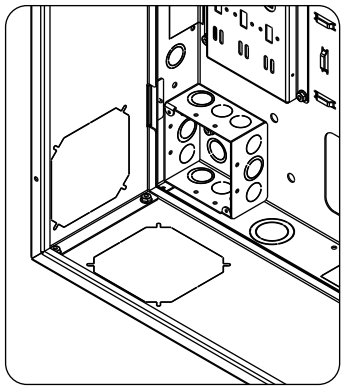

NOTE: A junction box is also included in the lower-left of the enclosure.

CABLE MANAGEMENT

- Route cables using the following knockouts provided on the top, sides, and bottom of the backpan. (**FIGURE AY**)

NOTE:
- Cable ties (not provided) may be used with bridge lances on the backpan to secure cabling.
- Optional grommets (VWMGR-30) are available to protect wiring when using circular knockouts.
- Optional VWM Series Cable Entry Brush Grommet (VWM-BGK) is also available. For more information, refer to the VWM Series Cable Entry Brush Grommet instruction sheet (71601952).

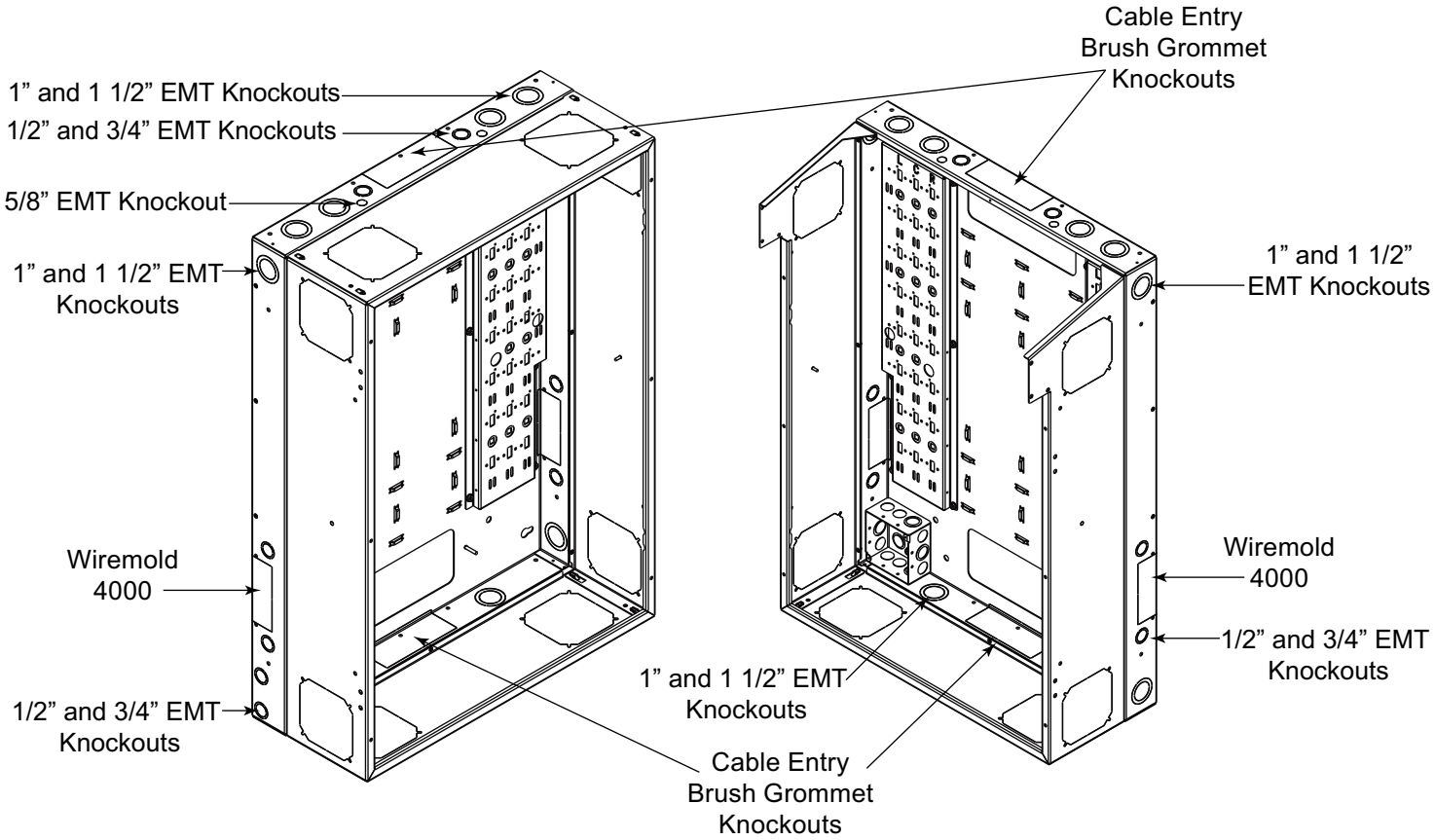

FIGURE AY