I005197

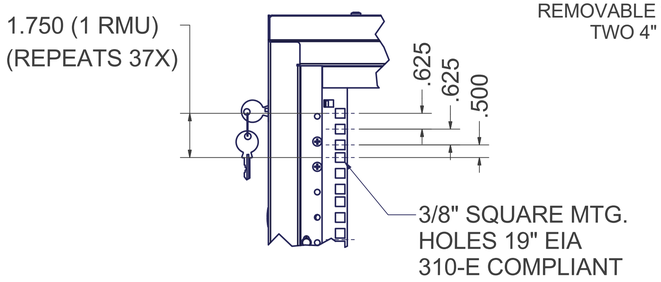

DETAIL A

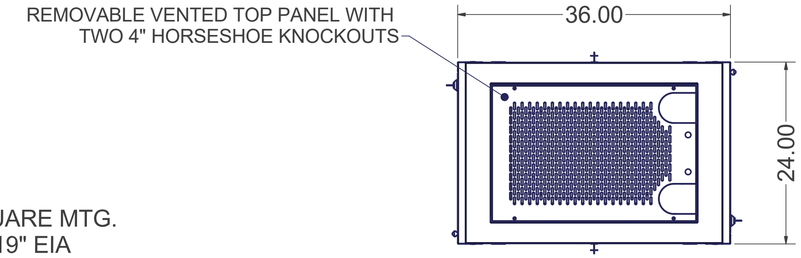

TOP VIEW

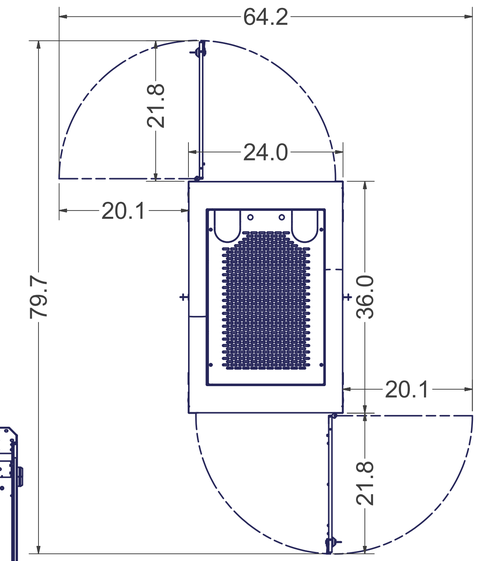

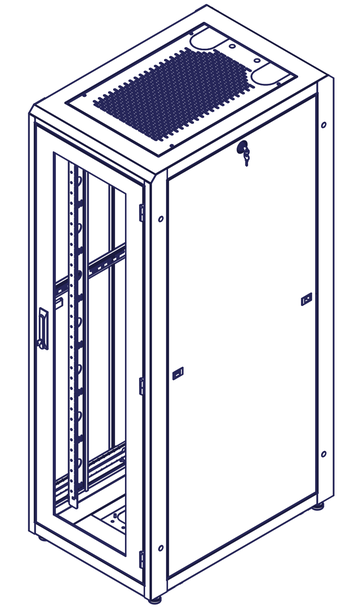

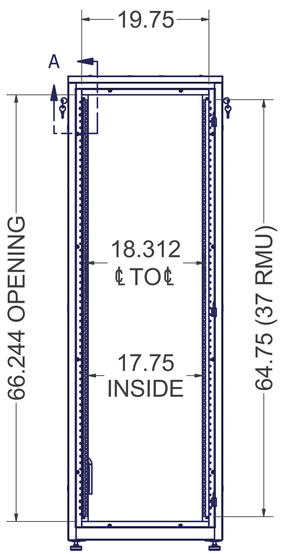

FRONT VIEW w/ DOORS REMOVED

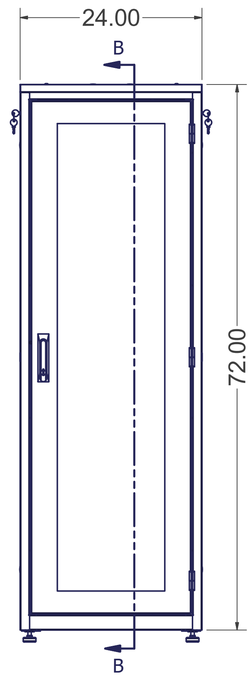

FRONT VIEW

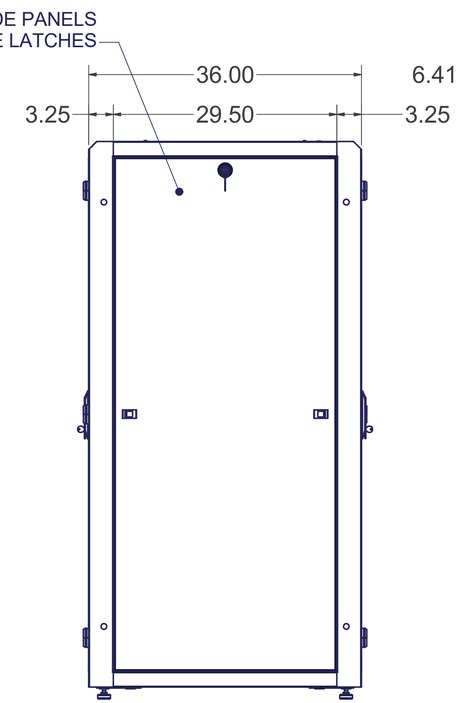

RIGHT SIDE VIEW

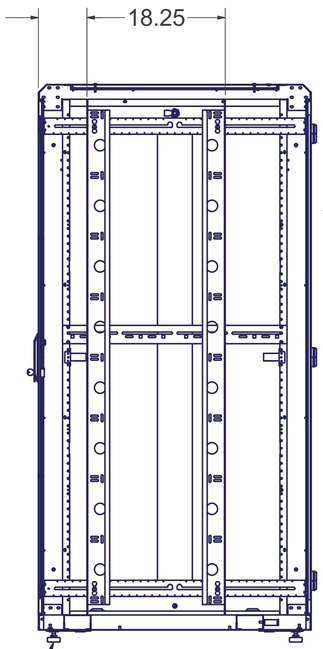

SECTION B-B

LEVELING GLIDES (4 INCLUDED)
1/2-13 UNC THREADED HOLES

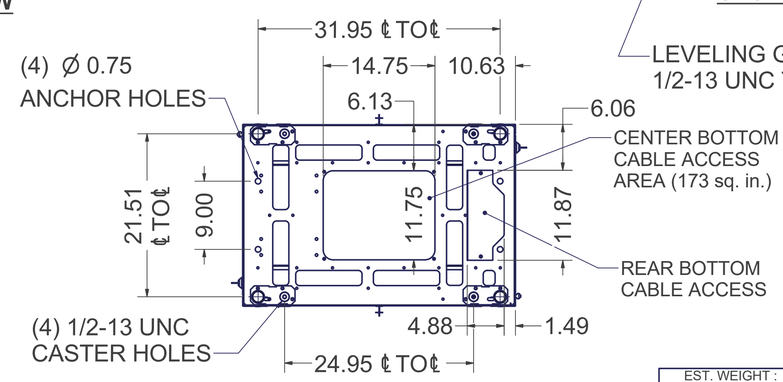

BOTTOM VIEW

SPECIFICATIONS:

DIMENTIONS: 72"H X 24"W X 36"D

RACK SPACES: 37 RMU w/ NUMBERED RMU INDICATORS, 19" EIA 310-E COMPLIANT

WEIGHT CAPACITY: 1500 LBS.

COLOR: DURABLE TEXTURE POWDER COATING

CONSTRUCTION: 2 PAIR MOUNTING RAILS, #12 GA. C.R.S.
FULLY WELDED FRAME, #16 GA. C.R.S.
DOOR, SIDE PANELS, TOP PANEL, #16 GA. C.R.S.

HARDWARE: PACKAGE OF QTY-50; M6 SCREWS AND CAGE NUTS, INCLUDED.

POPULAR CONFIGURATIONS

GL720E-2436-X-xxxxMS: CABINET WITH FRONT AND REAR MESH DOORS, PAIR SOLID SIDES, SOLID TOP PANEL; REPLACE 'xxxx' WITH SQM6 OR 1032 TO DESIGNATE MOUNTING RAILS

GL720E-2436-X-xxxxMS: CABINET WITH FRONT PLEXI DOOR AND REAR PERIMETER VENTED SOLID DOOR, PAIR SOLID SIDES, PERFORATED TOP PANEL; REPLACE 'xxxx' WITH SQM6 OR 1032 TO DESIGNATE MOUNTING RAILS

ADDITIONAL CONFIGURATIONS AVAILABLE; SEE CHART TO THE LEFT

COLOR / FRONT DOOR / REAR DOOR / SIDE PANEL / RAILS / TOP PANEL

720E-2436- X - X X X X X

OPTIONS WITH * MAY NOT BE CONFIGURABLE
ON WEBSITE. CONTACT FOR MORE INFORMATION

E PART NUMBER LEGEND

COLOR	FRONT DOOR	REAR DOOR	SIDE PANEL	RAILS	TOP PANEL
B Black	0 None*	0 None*	0 None*	0 None*	0 None*
W White	6 Plexi (shown)	8 Perimeter Vented Steel	1 Single Solid	1 19" EIA 10-32 Rails	2 Fan Top
	A Mesh	9 Solid	3 Pair Solid (shown)	5 19" M6 Cage Nuts (shown)	3 Solid Top
		A Mesh	4 Pair Vented		5 Perf Top (shown)

EST. WEIGHT : N/A

THIRD ANGLE PROJECTION

INTERPRET DRAWING PER ASME Y14.5M-1994
DIMENSIONAL LIMITS APPLY AFTER APPLICATION OF FINISH
DRAWING NOT TO SCALE
TOLERANCE UNLESS OTHERWISE NOTED:
ANGULAR +/- 1°
.XXXX +/- .010
.XXX +/- .015
.XX +/- .030
.X FOR REF. ONLY
UNLESS OTHERWISE SPECIFIED
ALL DIMENSIONS ARE IN INCHES

NOTICE:

Use of this document is subject to a confidentiality and nondisclosure agreement with Great Lakes Data Racks & Cabinets and may not be reproduced, disclosed or utilized in whole or in part without prior written authorization from Great Lakes.

PART NUMBER: 720E-2436-X-xxxMS/P
MATERIAL TYPE:
MATERIAL GAUGE:
FINISH:
DRAWN CDM DATE 3/12/2012
CHECKED & APP. DATE

TITLE: **72"H x 24"W x 36"D ENHANCED BASE UNIT ASSEMBLY**

GREAT LAKES DATA RACKS & CABINETS
P.O. BOX 551 EDINBORO, PA 16412
PHONE (814) 734-7303 FAX (814) 734-3907
E-MAIL info@greatcabinets.com

DWG NO: *720E-2436-X-xxxMS/P* REV SHEET: 1 OF 1