Instruction Sheet

Black Series

Universal Door Kit (BR-PD-XX)

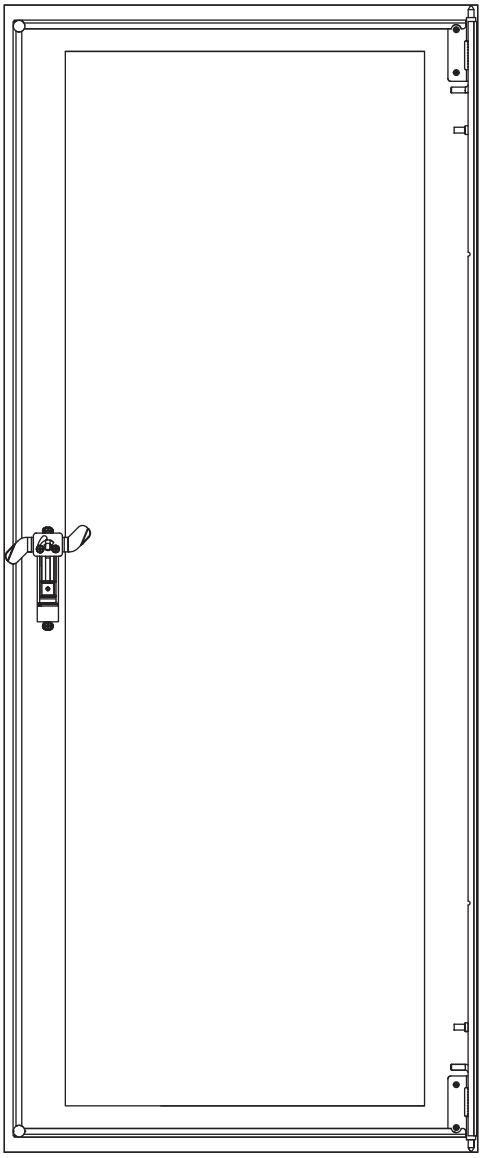

THANK YOU

Thank you for purchasing a Black Series Universal Door kit by Middle Atlantic Products. Please read these instructions thoroughly before installing or assembling this product.

Middle Atlantic Products

100-00045 Rev A

IMPORTANT SAFETY INSTRUCTIONS

- Read these instructions.
- Keep these instructions.
- Heed all warnings.
- Follow all instructions.
- Clean only with dry cloth.
- Only use attachments/accessories specified by the manufacturer.

DANGER HAZARDOUS VOLTAGE: The lightning flash with the arrowhead symbol, within an equilateral triangle is intended to alert the user to the presence of uninsulated dangerous voltage within the product's enclosure that may be of sufficient magnitude to constitute a risk of electric shock to persons.

WARNING: A warning alerts you to a situation that could result in serious personal injury or death.

WARNING: Middle Atlantic Products, Inc. electrical systems conform to and should be properly grounded in compliance with requirements of the current National Electrical Code or codes administered by local authorities.
All electrical products may present a possible shock or fire hazard if improperly installed or used. Middle Atlantic Products, Inc. electrical products may bear the mark of a Nationally Recognized Testing Laboratory (NRTL) and should be installed in conformance with current local and/or the National Electrical Code.

WARNING: Failure to read, understand and follow the following information can result in serious personal injury, damage to the equipment or voiding of the warranty. It is the responsibility of the Installer/User to ensure that this product is loaded according to specifications.

INSTRUCTIONS IMPORTANTES SUR LA SÉCURITÉ

- Lire ces instructions.
- Conservez ces instructions.
- Respectez tous les avertissements.
- Suivez toutes les instructions.
- Nettoyer uniquement avec un chiffon sec.
- N'utilisez que des accessoires spécifiés par le fabricant.

DANGER TENSION DANGEREUSE: Le symbole de la pointe de flèche, dans un triangle équilatéral, est destiné à alerter l'utilisateur sur la présence de tension dangereuse non isolée dans l'enceinte du produit qui peut être d'une ampleur suffisante pour constituer un risque d'électrocution.

AVERTISSEMENT: Un avertissement vous avertit d'une situation pouvant entraîner des blessures graves ou la mort.

AVERTISSEMENT: Middle Atlantic Products, Inc. électrique systèmes conformes à devraient être mis à la terre dans conformité avec les exigences de la National actuelle ou comme les codes électrique administré par les autorités locales autorités.
Tous les produits électriques peuvent présenter un choc ou un incendie danger si elle est mal installé ou utilisé. Middle Atlantic Products, Inc. produits électriques peuvent porter la marque d'un Nationally Recognized Testing Laboratory (NRTL) et doit être installé en conformité avec courant local et/ou le National Electrical Code.

AVERTISSEMENT: Refus de lire, comprendre et suivre la renseignements suivants peut traduire par de graves blessures, des dommages à l'équipement ou invalider la garantie. Il est la responsabilité de l'installateur / utilisateur de s'assurer que ce produit est chargé conformément aux spécifications.

REQUIRED TOOLS

- #2 Phillips Screwdriver

WARNING: Use tools with caution and follow all necessary safety protocols.
AVERTISSEMENT: Utiliser des outils avec prudence et suivre tous les protocoles de sécurité nécessaires.

INTRODUCTION

NOTE: Locking Side Panels (Model No. SIDE-XX-XX) are required on QAR Series enclosures when installing front or rear doors.

INSTALLATION

1. Pivot your door and place the lower hinge into the hole on the bottom front (or back) of your rack as shown. (**FIGURE A**)

2. Pull the upper hinge on the door to retract pin, pivot door into position, and release pin to insert into the hole on the top of the enclosure. (**FIGURE B**)

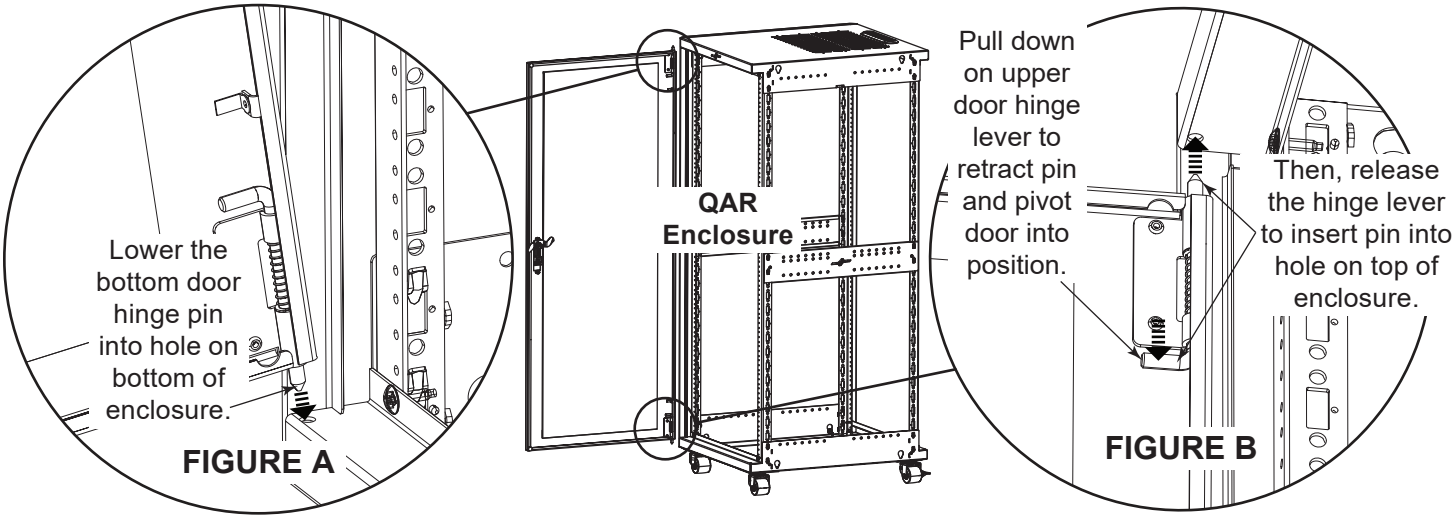

GROUNDING AND BONDING

Protective Earth Terminals (PET) are located in backpan of the wall rack. These terminals are marked with the symbol ⏚. Wall rack parts, center section and door, contain or are provided with bonding points for connection to the backpan/PET. Protective earth and bonding connections shall be in accordance with Article 250 of the National Electric Code.

- Use bonding wire and hardware provided with your door's optional protective earth terminal kit (Model No. PET-K-DOOR) to attach bonding wire from bonding points from your enclosure to the door as shown. (**FIGURE C**)

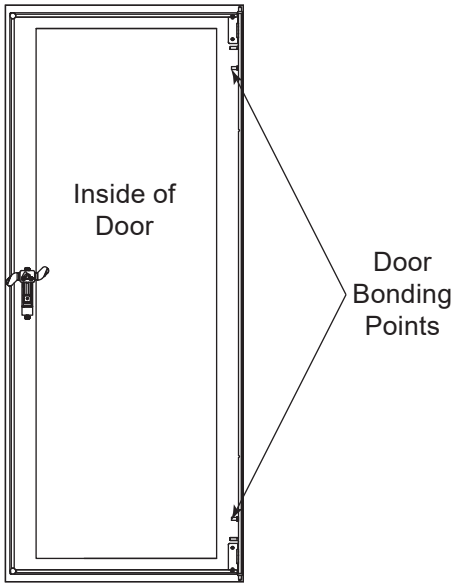

FIGURE C

REVERSING THE DOOR

1. Use #2 Phillips screwdriver to remove the (2x) screws from the handle as shown. (**FIGURE D**)

2. Remove the handle from your door and set it aside with the screws.

3. Reverse the “Grounding and Bonding” topic on page 3, if applicable.

4. Reverse “Installation” topic on page 3 to remove your door from the enclosure.

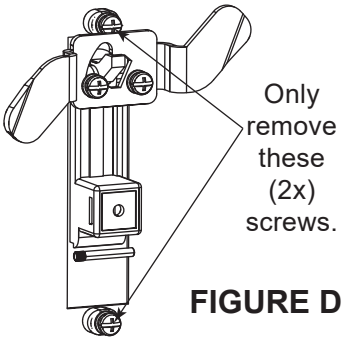

FIGURE D

5. Carefully rotate the door and install it on the other side using “Installation” and “Grounding and Bonding” topics as needed.

6. Use screwdriver and (2x) screws to re-install the handle.

WARRANTY

For warranty information, refer to http://www.middleatlantic.com/company/about-us.aspx#warranty

Corporate Headquarters
Voice: 973-839-1011 - Fax: 973-839-1976 - International Voice: +1 973-839-8821 -
Fax: +1 973-839-4982 - www.middleatlantic.com - info@middleatlantic.com

Middle Atlantic Canada
Voice: 613-836-2501 - Fax: 613-836-2690 - ca.middleatlantic.com -
customerservicecanada@middleatlantic.ca

Middle Atlantic EMEA Technical Support
Voice: +31 (0) 495 726002 - av.emea.middleatlantic.support@legrand.com

Factory Distribution
United States: New Jersey, California, Illinois - Canada: Ontario - The Netherlands: Weert

At Middle Atlantic Products we are always listening. Your comments are welcome.

Middle Atlantic Products is an ISO 9001 and ISO 14001 Registered Company.