G5 PTZ Corner Mount

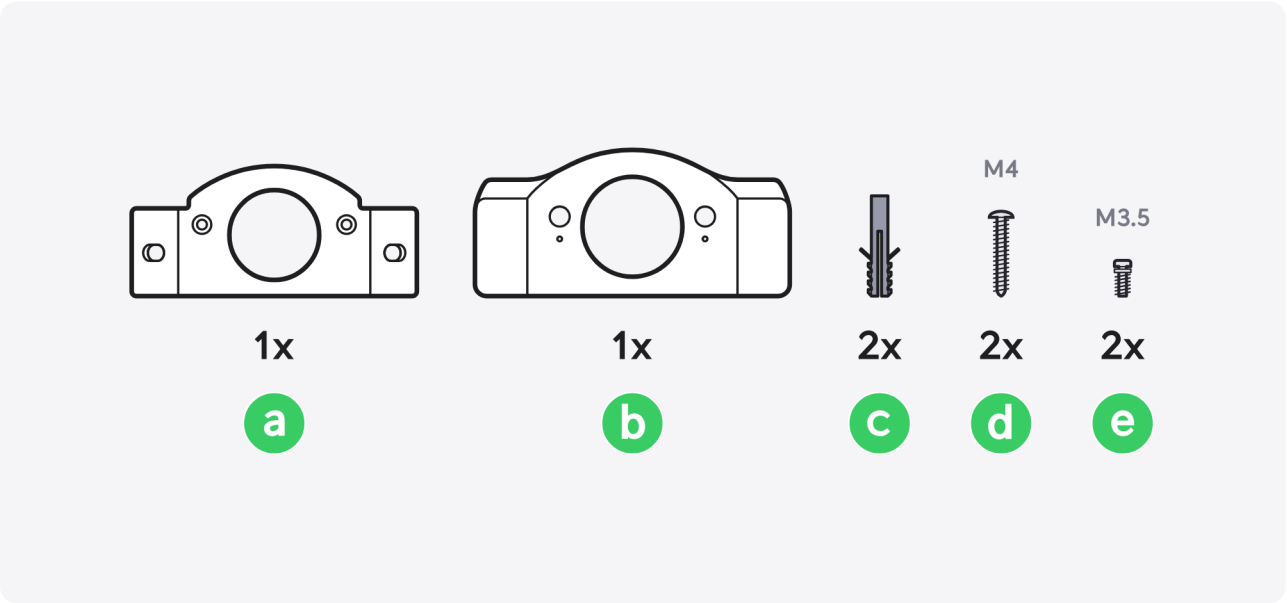
M4
M3.5
1x
1x
2x
2x
2x
a
b
c
d
e

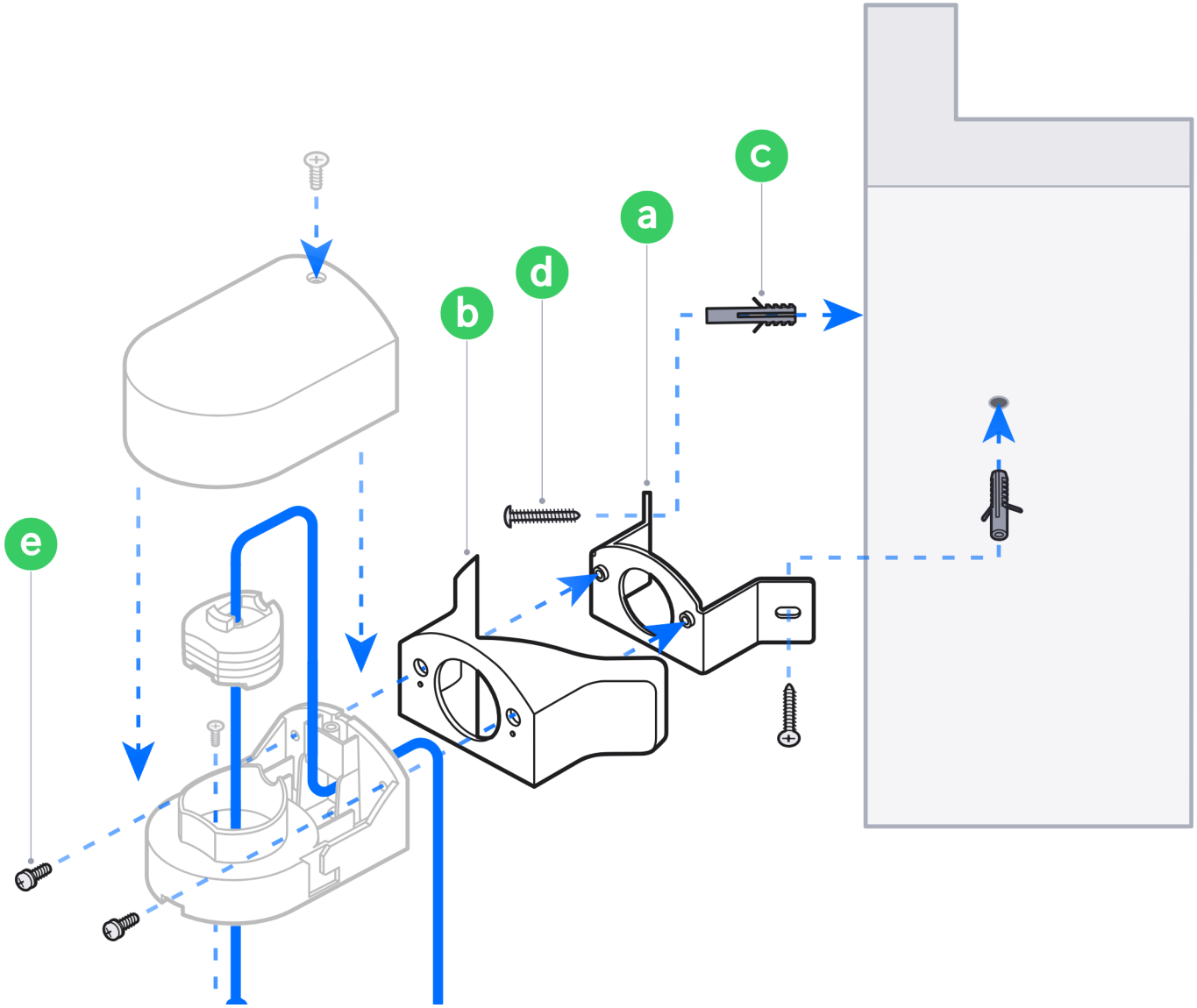
c
a
d
b
e

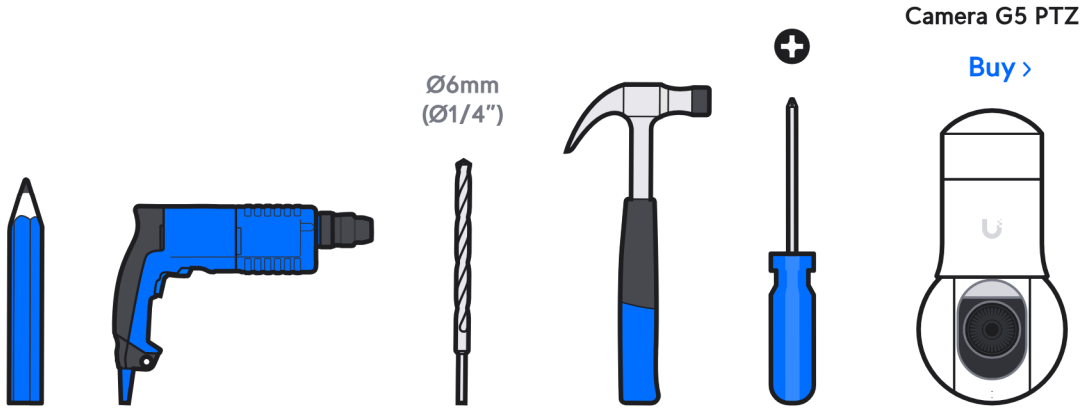
Ø6mm
(Ø1/4")
Camera G5 PTZ
Buy ›

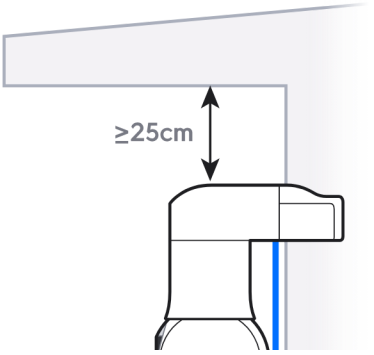
≥25cm

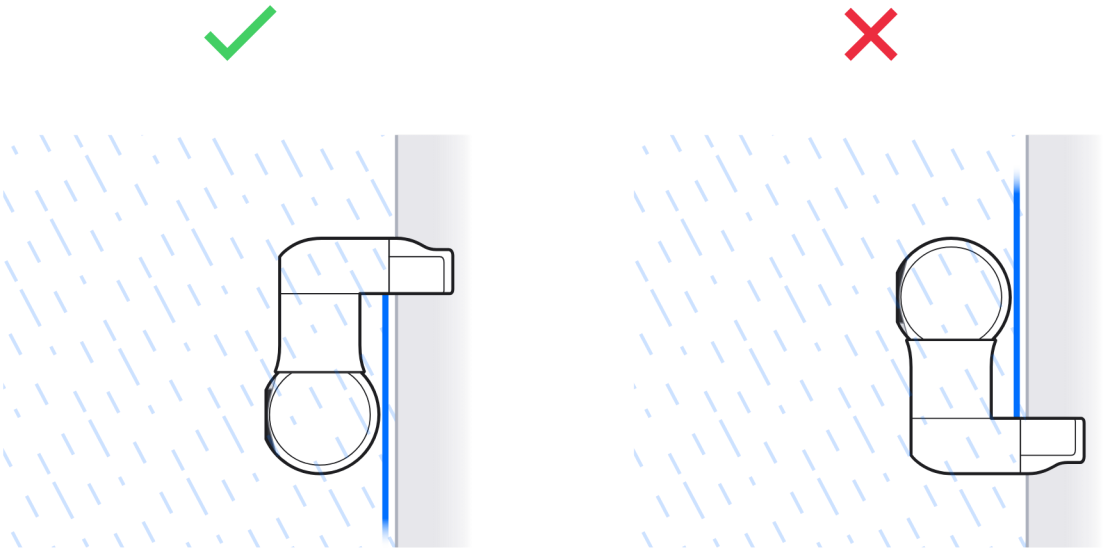

1

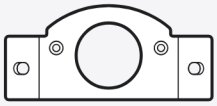

1x

a

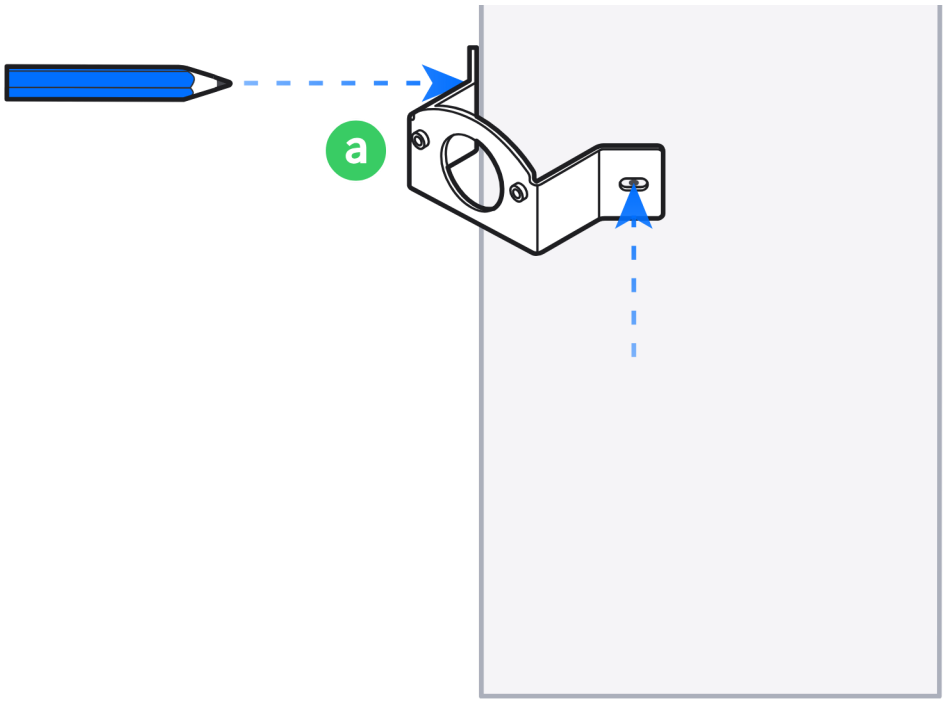

2

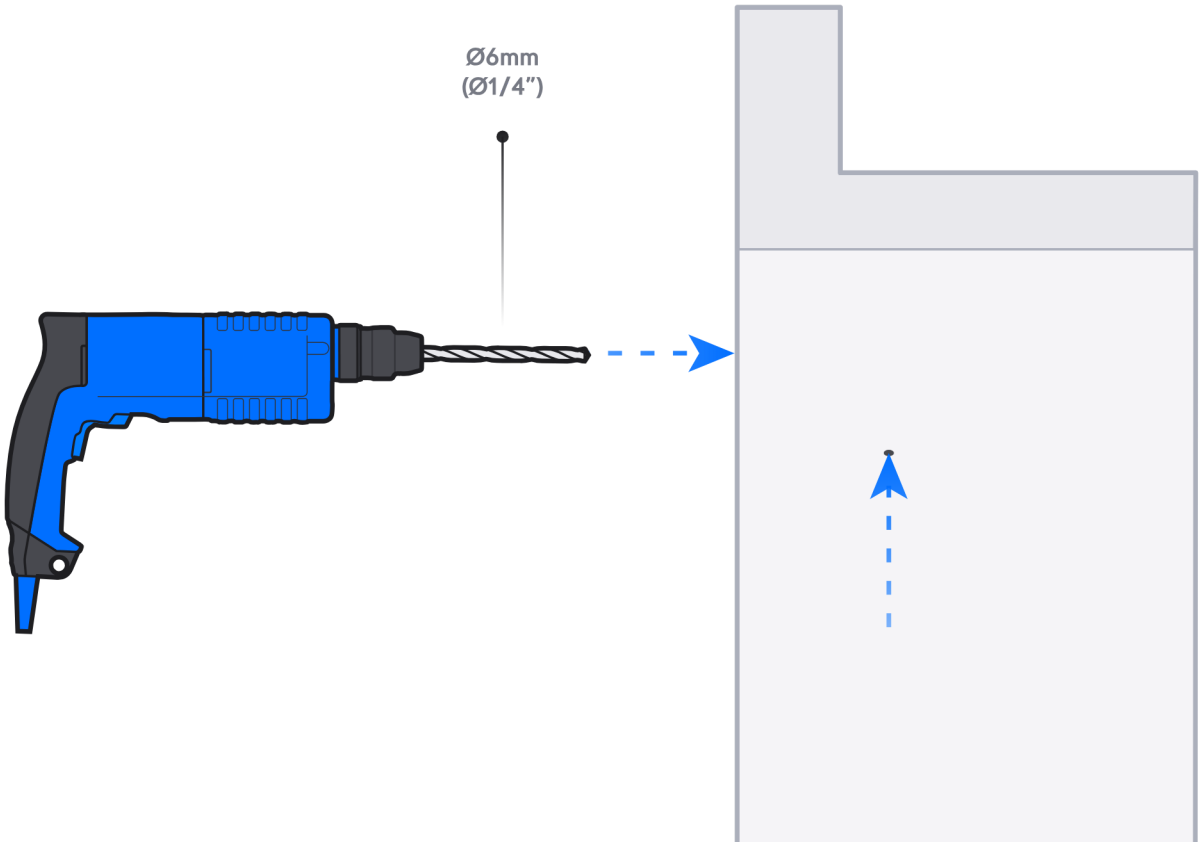

3

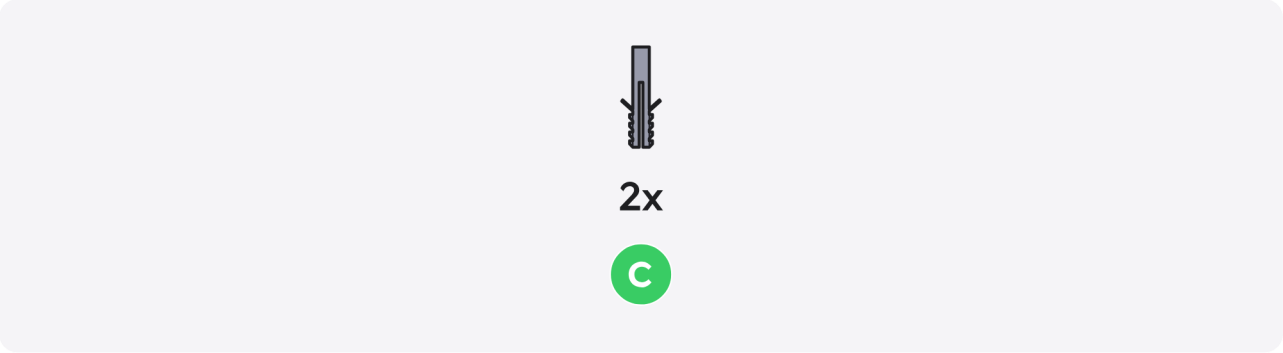

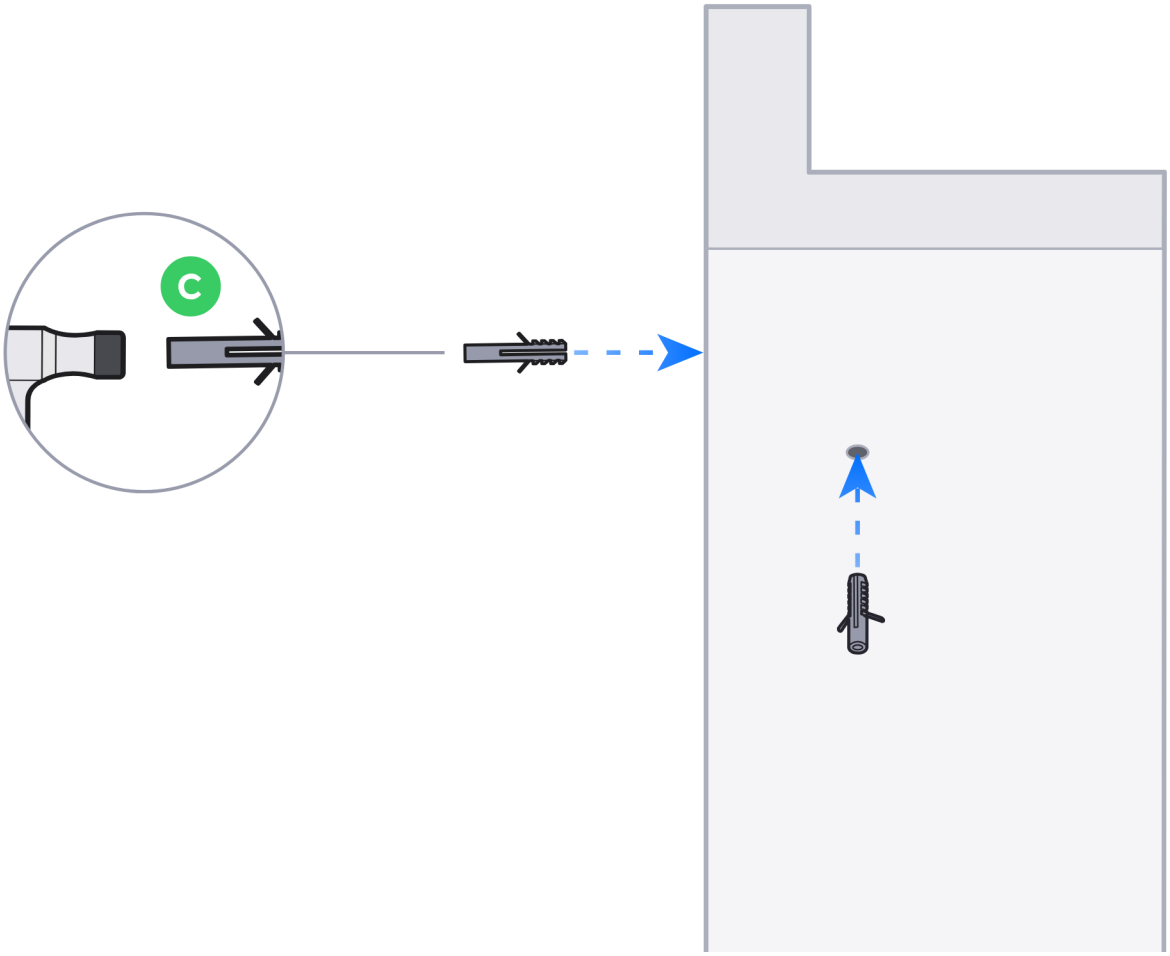

4

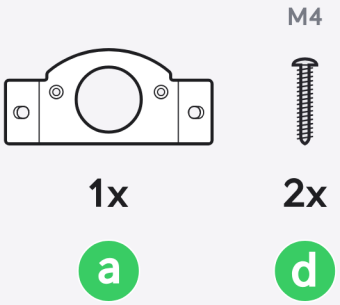

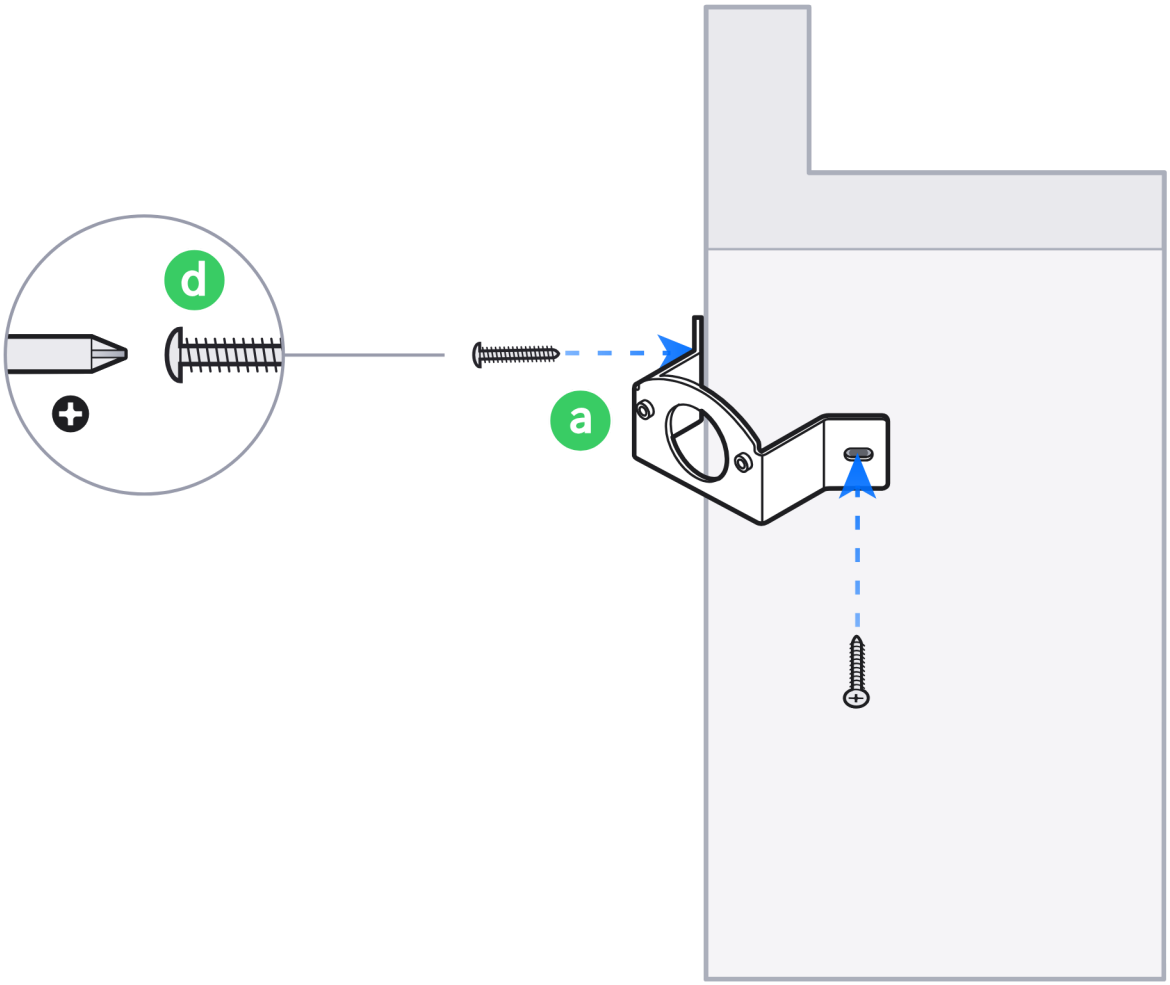

5

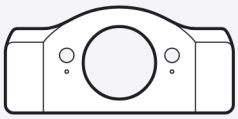

1x

b

M3.5

2x

e

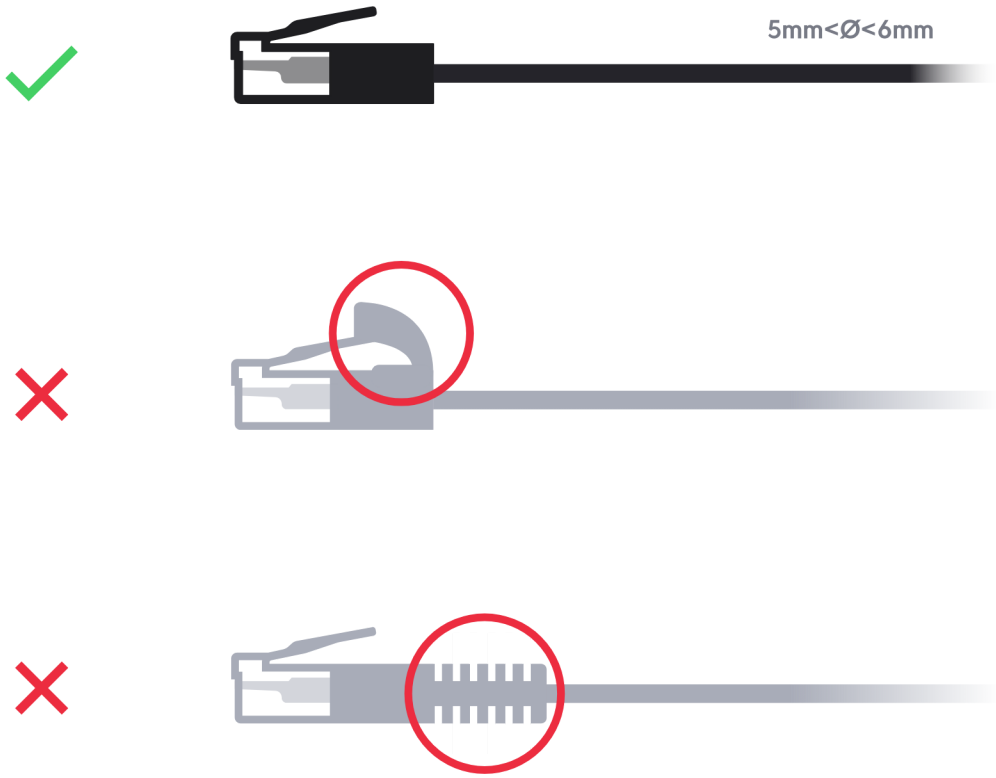

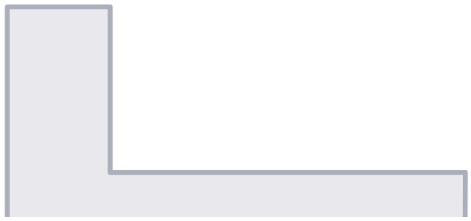

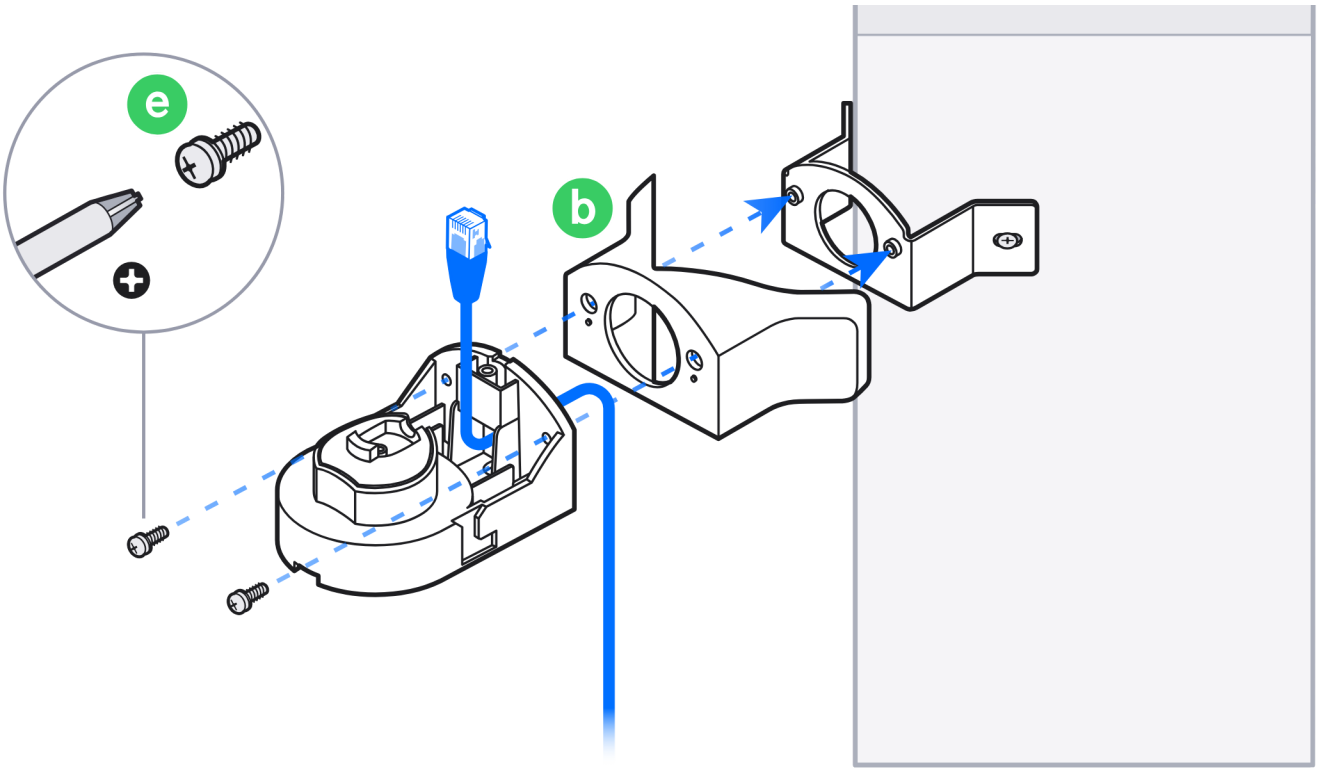

6

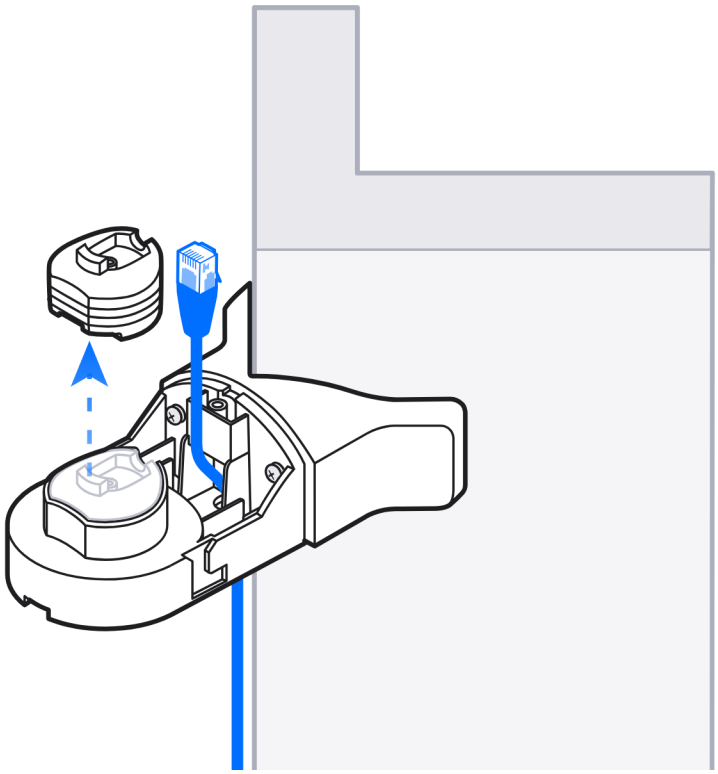

7

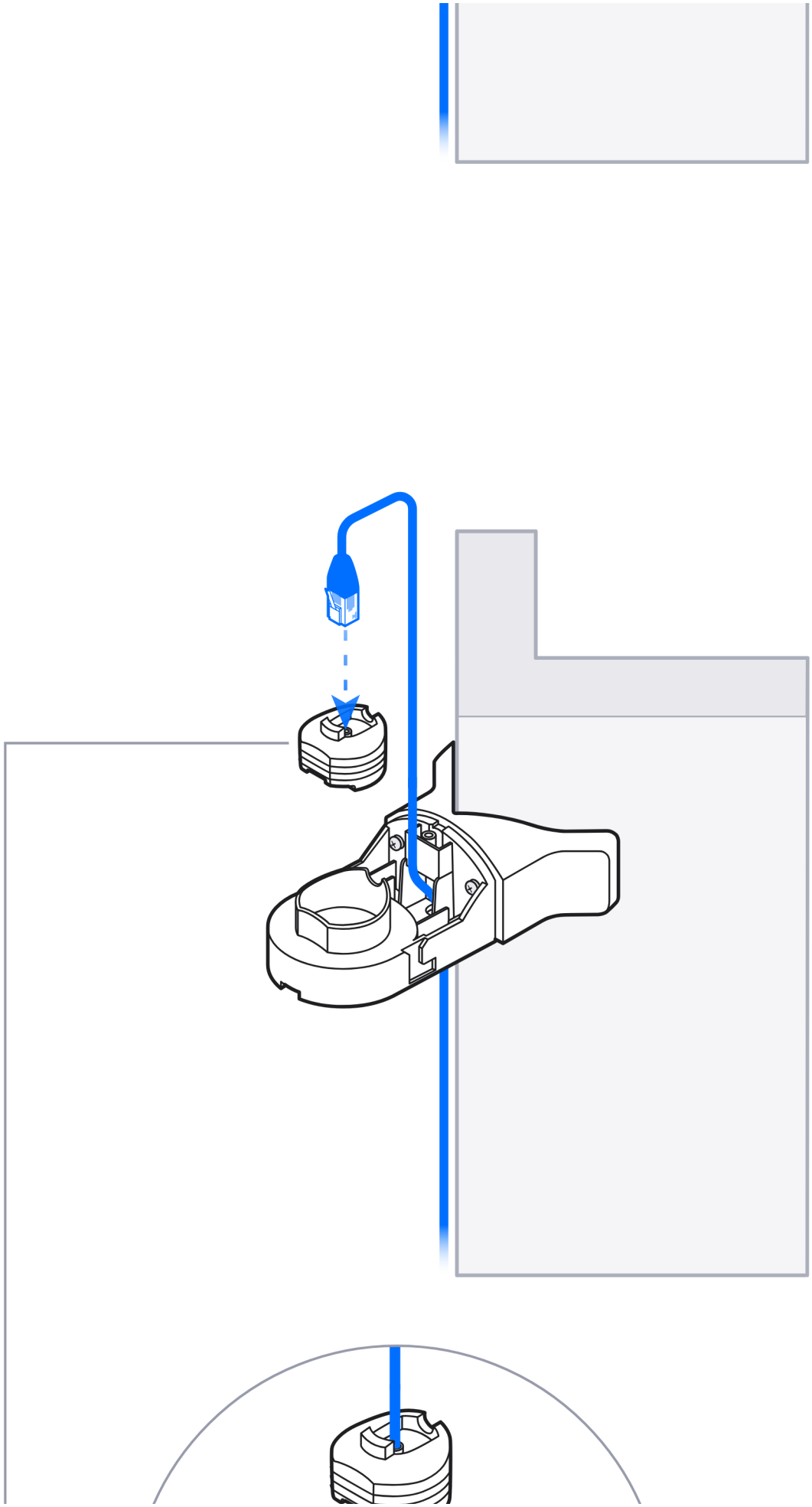

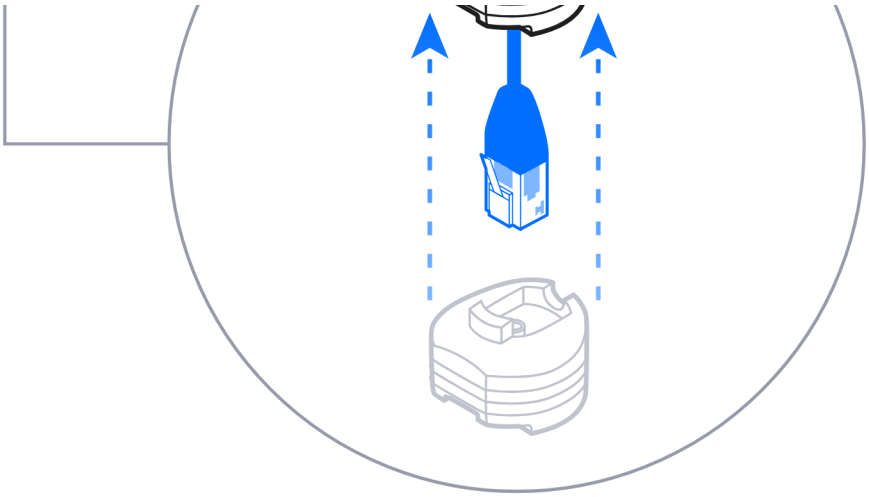

8

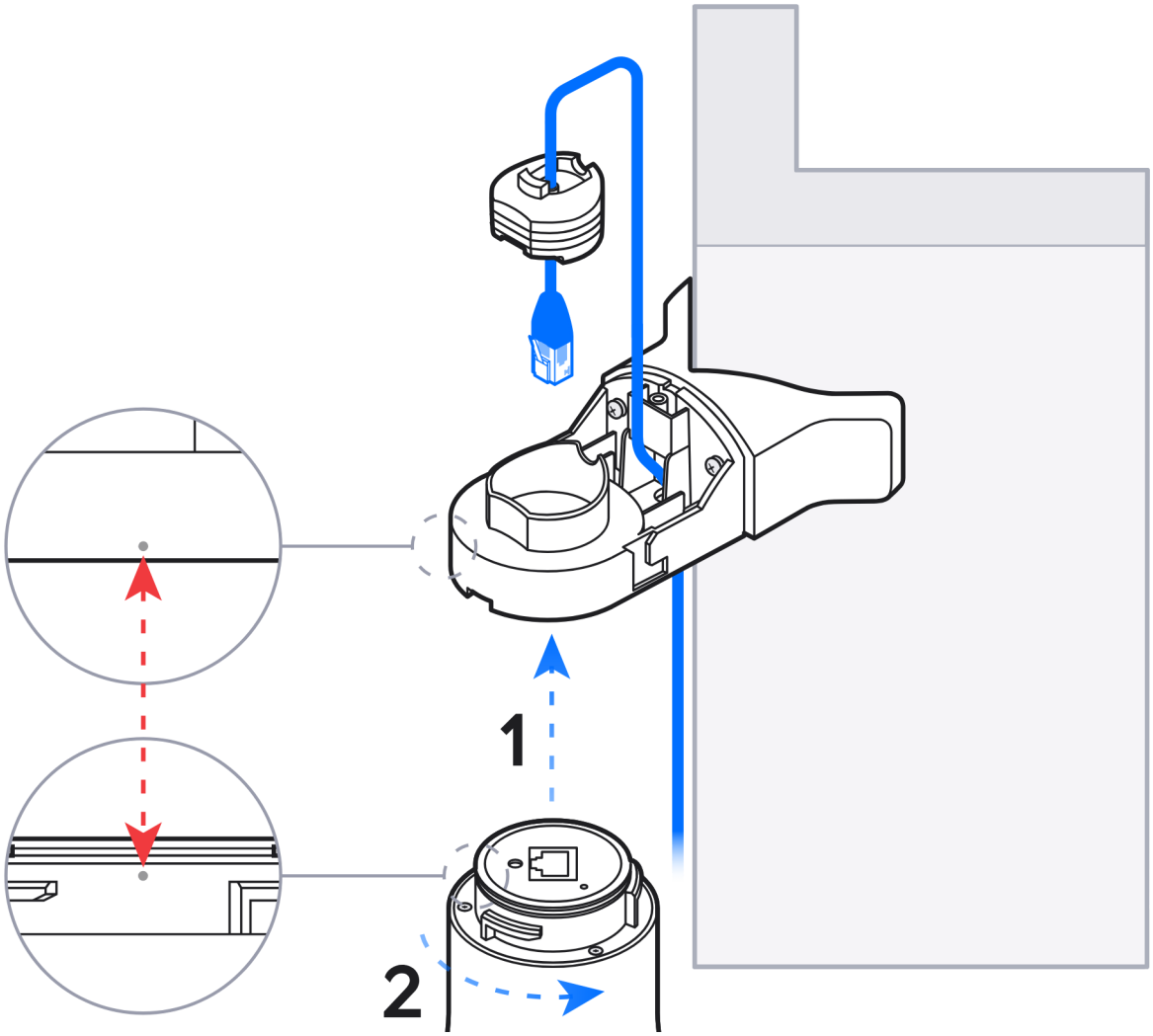

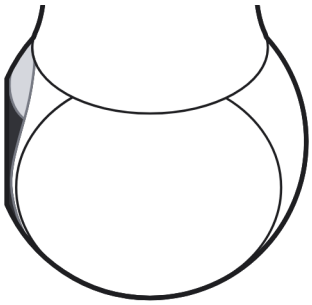

9

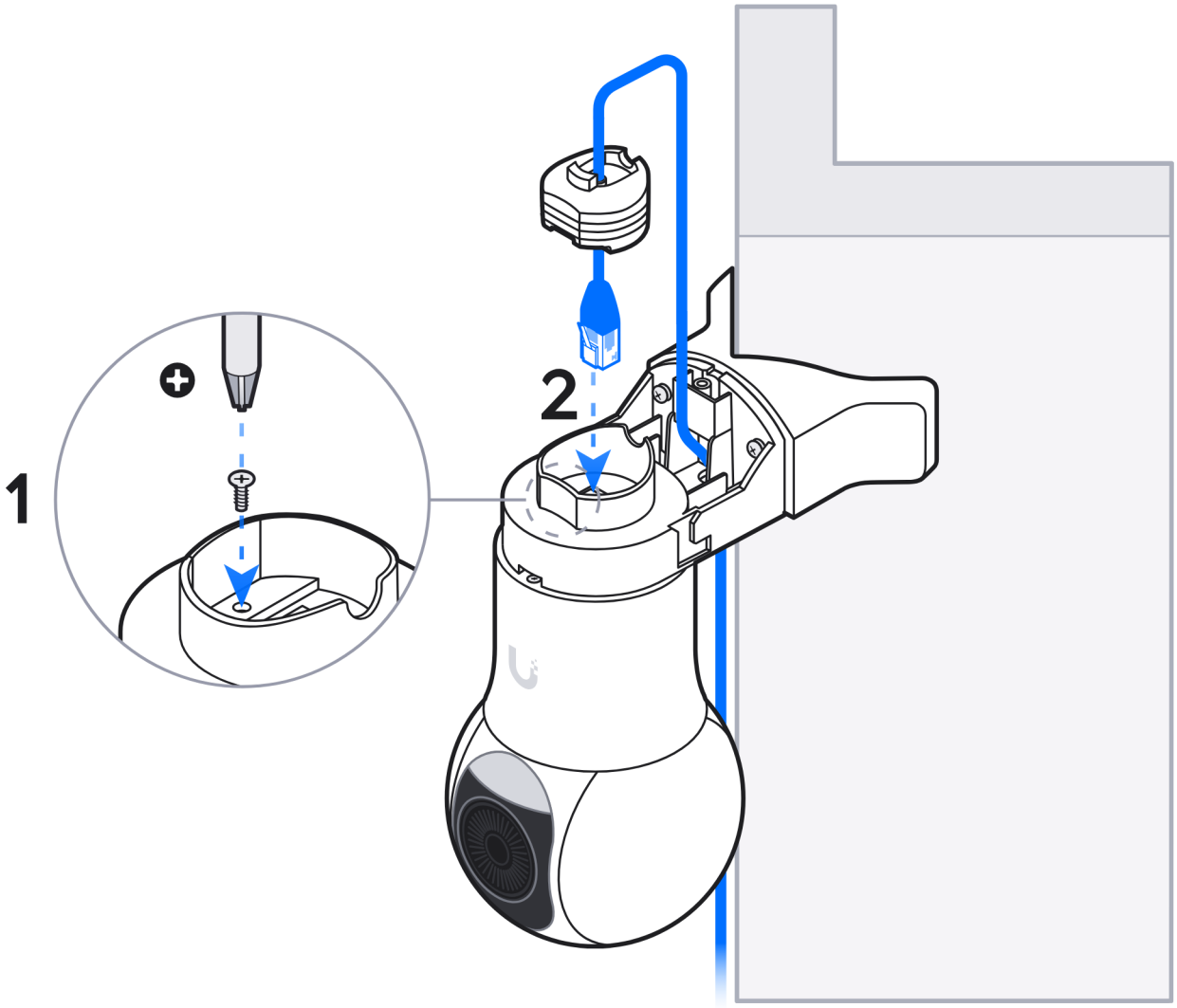

10

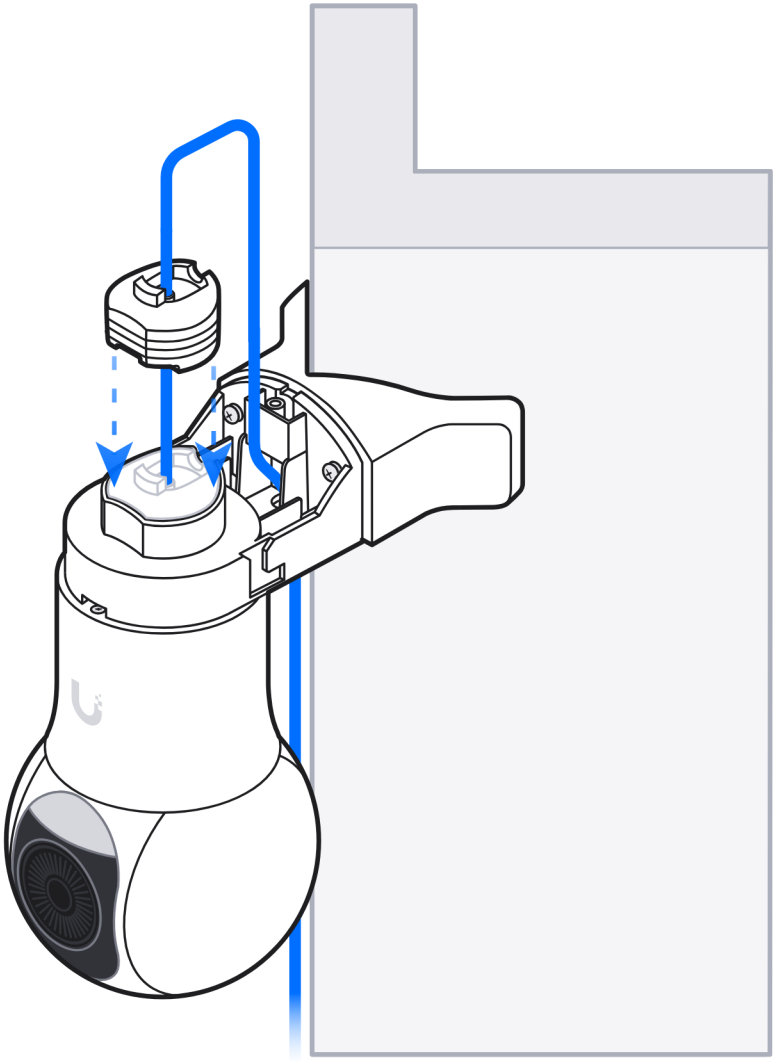

11

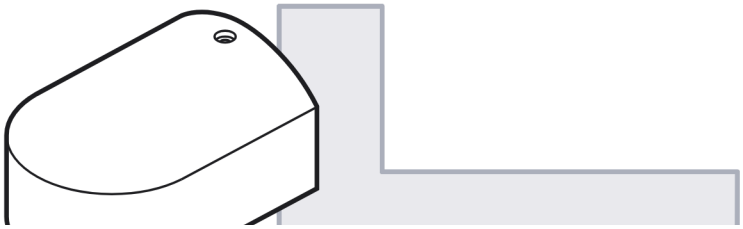

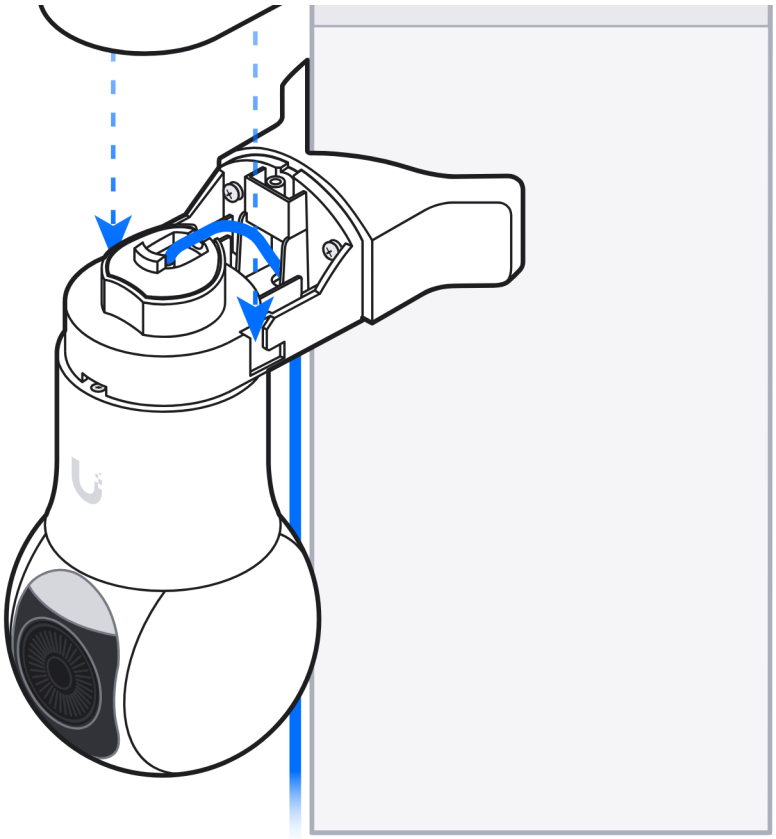

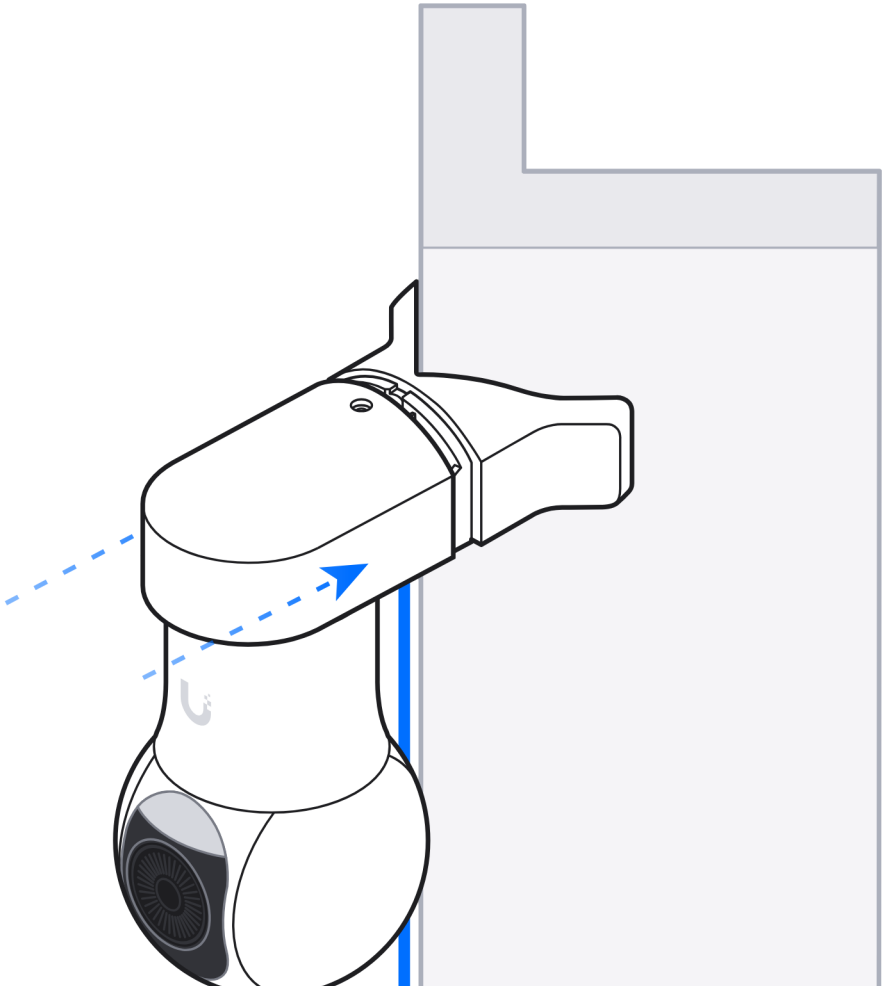

12

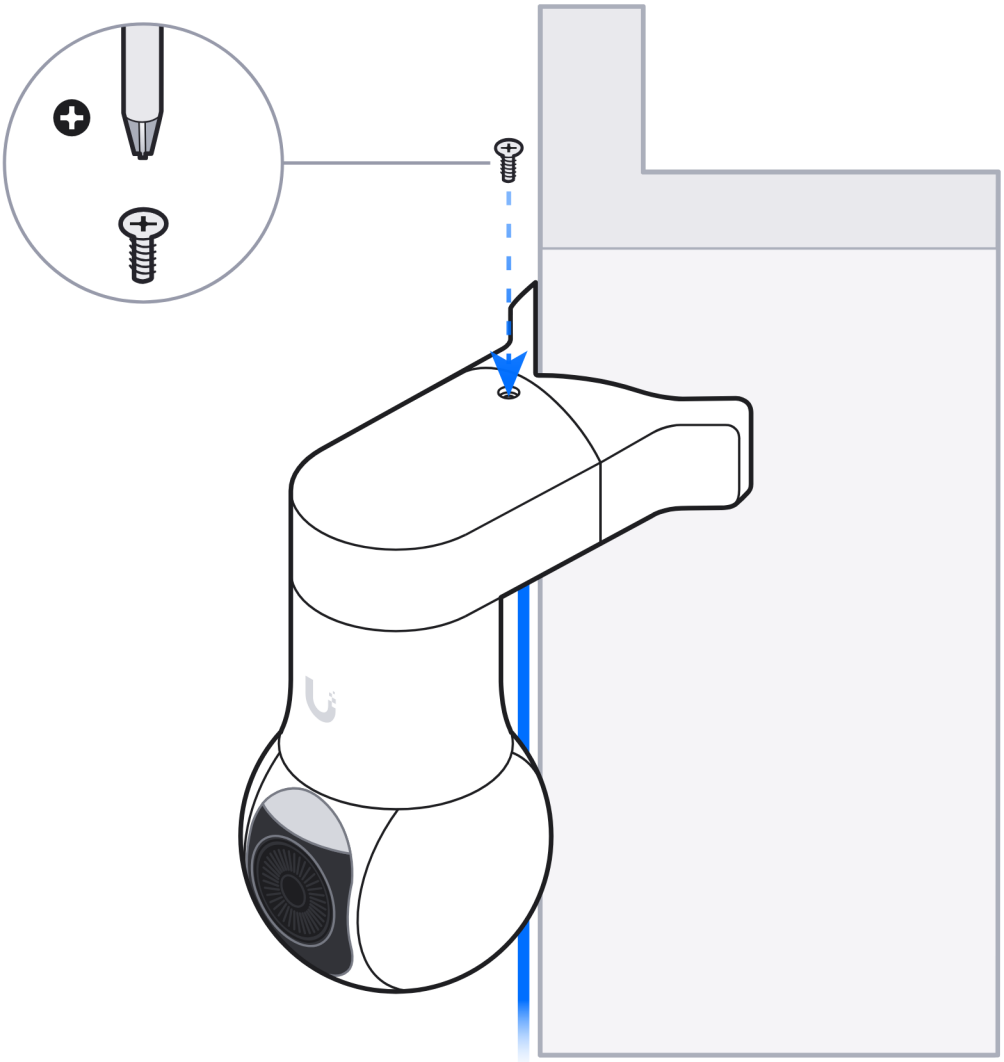

©2024 Ubiquiti Inc. All rights reserved. Ubiquiti and the Ubiquiti U logo are trademarks or registered trademarks of Ubiquiti Inc. in the United States and in other countries.