HI-Impact

Surface Mount Boxes

Steel Surface Mount Box

Features

- Easy Way to Mount and Protect Connectivity in Punishing Environments
- Supports All HI-Impact Media Types
- Provides NEMA 4/12/13 Environmental Protection

Ordering Information

Description	Color	Catalog Number	UPC
HI-Impact Steel Surface Mount Box, Powder Coated, 2-Port, NEMA Type Rating	Gray	**HI2CB2G**	662620853666

Listings

UL Listed

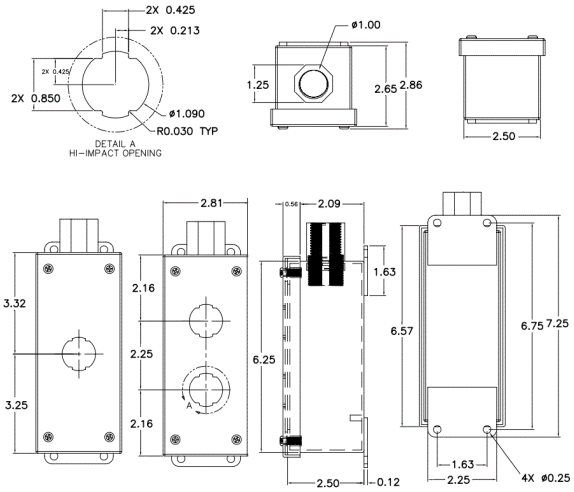

Specifications

Ports	2
NEMA Type Rating	4/12/13

Accessories

High-Impact Category 5E Connector	**HI5E**
High-Impact Category 5E Coupler	**HI5EC**
High-Impact Category 6 Connector	**HI6**
High-Impact Category 6 Coupler	**HI6C**
High-Impact Protective Cap	**HIC**

Online Resources

Customer Use Drawing
eCatalog