Panel Extension Kit

APPLICATION

Panel Extension Kit provides a mounting method for e2XHD Rear Cable Management in situations where the equipment cabinet or 4-post rack vertical rails have a profile that interferes with the mounting of the e2XHD Cable Management Shelf. They also can be used to mount cable management bars or recess-mount flat patch panels.

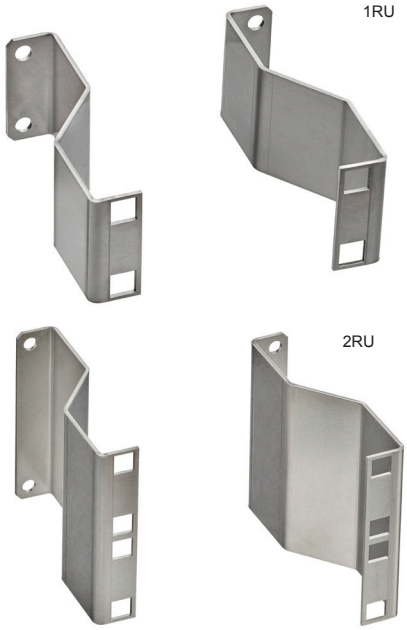

SPECIFICATION

Panel Extension Kit shall be constructed of 14-gauge stainless steel. It shall have a stainless steel finish for use with both black and white panels. Panel Extension Kit shall provide both square and round holes to accommodate multiple mounting scenarios.

FEATURES

- Constructed of durable 14-gauge stainless steel
- Compatible with Leviton e2XHD patch panels
- Can be used to recess mount flat patch panels
- Stainless steel finish for use with both white and black panels

DESIGN CONSIDERATIONS

- Can be used with the following Leviton cable management solutions:
  - E2X1F-CMB
  - 49006-AMB
  - 49005-DMB
  - 49258-TWB
- Can be used with the following Leviton patch panels:
  - E2X1F-S48
  - E2X1F-E48

MECHANICAL SPECIFICATIONS

Dimensions:	1RU: 4.228 inches X 1.75 inches
	2RU: 4.228 inches X 3.488 inches
Materials:	14-gauge stainless steel

COUNTRY OF ORIGIN

China

WARRANTY INFORMATION

For Leviton product warranties, go to leviton.com/ns/warranty

Copyright © 2022 Leviton Manufacturing Co., Inc. All rights reserved.
Leviton reserves the right to modify product specifications without notice.

E22 SS1140-GL ENv1
Created May 2022

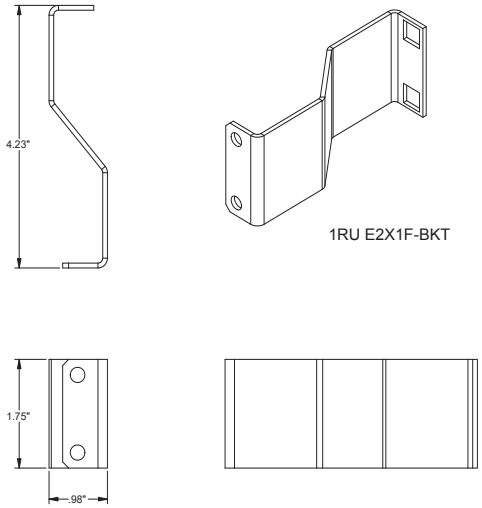

1RU E2X1F-BKT

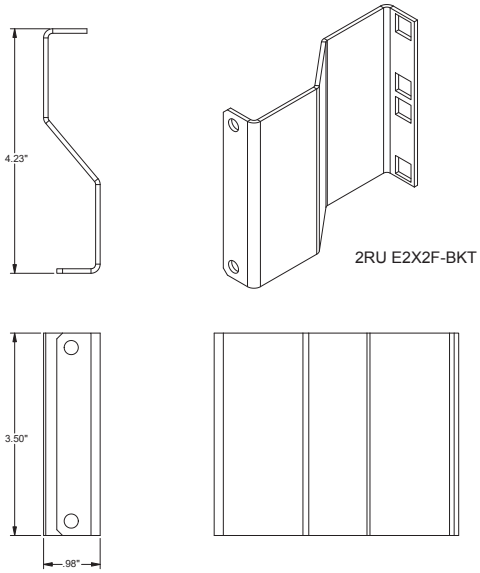

2RU E2X2F-BKT

PART NUMBERS	
Description	**Part No.**
Panel Extension Kit – 1RU	E2X1F-BKT
Panel Extension Kit – 2RU	E2X2F-BKT

For further support information, visit leviton.com/ns/support

USA
Network Solutions Headquarters
+1 (800) 722 2082
infoUSA@leviton.com
Leviton Berk-Tek Cable: +1 (800) 237 5835
berktek.info@leviton.com

Asia Pacific
+852 3620 2602
infoAPAC@leviton.com

Canada
+1 (800) 461 2002
infoCanada@leviton.com

Europe
+44 (0) 1592 772124
infoEurope@leviton.com

Latin America
MX: +52 (55) 2128 6286
LATAM: +52 (55) 2333 5963
infoLATAM@leviton.com

Middle East & Africa
+971 (4) 247 9800
infoMEA@leviton.com

NETWORK SOLUTIONS PRODUCTS ARE AVAILABLE WORLDWIDE IN OVER 100 COUNTRIES. VISIT US ONLINE AT LEVITON.COM/NS TO LEARN MORE.

Copyright © 2022 Leviton Manufacturing Co., Inc. All rights reserved.
Leviton reserves the right to modify product specifications without notice.

E22 SS1140-GL ENv1
Created May 2022