BRYANT®

Wallplate
.625" Opening
1-Gang

Features

- High-impact, self-extinguishing polycarbonate material
- More rigid; sharp lines and less dimpling
- Smooth satin finish; blends into wall with an optimum finish

Ordering Information

Description	Gang	Color	UPC Number	Catalog Number
Wallplate with .625" opening smooth satin finish, for use with coaxial	1	Ivory	883778312878	**P737I**

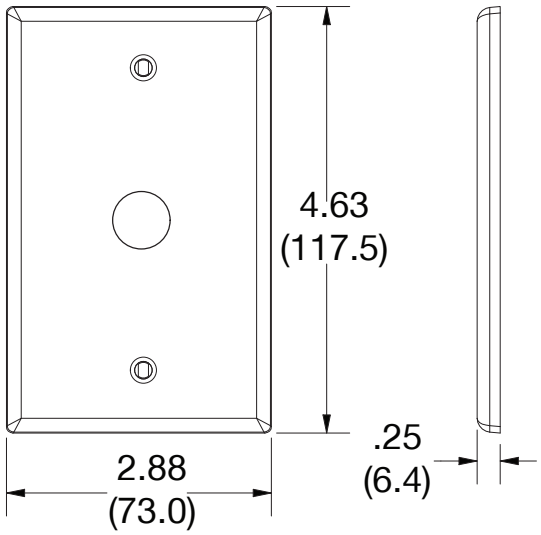

Listings

cULus Listed

Specifications

Material	Polycarbonate thermoplastic
Thickness	.25 (6.4)
Orientation	Orientation
Mounting	Screw
Mounting Screws	Painted steel
Dimensions	4.63 in x 2.88 in x 0.25 in
Flammability	UL 94 V2

Dimensions in Inches (mm)