FlexView™ IFP Series

display carts

interactive flat panel mounting with premium storage and power distribution

features:

- Mounting for interactive flat panels or displays ranging from 60”-102”, with a large, 1200x600 VESA pattern and a robust weight capacity of 300 lbs.
- Equipment storage with 2RU vertical mounting and removable, tool-free Lever Lock™ for small device mounting as well as power distribution built in
- Available in white and black bases with premium aesthetics:
  - 5 optional finishes in popular HPL colors and two textured, Metawave chemetals for interesting design elements to complement the décor in any space
- Offering includes fixed or height adjustable, ADA compliant electronic lift models
  - Height adjustability from 40” to 60” to center of the display paired with the unimpeded, scalloped base ensures the electronic lift design is compliant with ADA standard 803 for reachability, achieving up close display interaction at the desired ergonomic setting for any user
- Finishes correspond with Pre-configured technical furniture solutions, providing cohesive designs for any learning or meeting space
- Heavy duty, locking 4” casters
- Passive thermal management with ventilation in the top
- Simple and quick maintenance with easy-access key locked doors
- UL Listed in the US and Canada

specifications:

FlexView™ IFP Series Display carts and Stands shall be Middle Atlantic Products model #FVS-1200-_C-_H__ (see chart for available models). Overall dimensions of FVS IFP shall be __”H x 47.31” W x 34.66”D (see drawing). FVS IFP display height adjustability shall be from __ to __ (refer to chart). FVS IFP height adjustability method shall be __(Manual, Electric, refer to chart). FVS IFP shall have 4” diameter directional locking casters. FVS IFP series shall have a __(white, black, refer to chart) powdercoat and choice of finishes, refer to chart . FVS IFP Series shall have a steel subframe. FVS IFP Series shall provide 2 rackspaces (manual height adjustment model only) with a maximum of 46.1” usable space. FVS IFP shall include an accessory basket and Lever Lock system. FVS IFP shall have knockouts for six AVIP panels and one RACO 440 Knockout. FVS IFP shall accommodate one display and have horizontal VESA mounting patterns of 200, 400, 600, 800, 1000 and 1200 and a maximum vertical VESA pattern of 600, and a shall accept monitors with a diagonal display size of 60” to 102” (recommended.) FVS IFP shall have an overall weight capacity of 320 lb., with no more than 300 lb. for the monitor and 50 lb. mounted inside. FVS IFP shall include a 15 Amp power strip with surge protected 8 outlets and a 10’ SignalSAFE™ cord. FVS IFP shall comply with ADA Standard 803 (electric lift model only.) FVS IFP shall be UL Listed in the US and Canada. FVS IFP shall be GREENGUARD Gold Certified. FVS IFP shall be manufactured by an ISO 9001 and ISO 14001 registered company. FVS IFP shall be warrantied to be free from defects in material or workmanship under normal use and conditions for the 7 years.

Customizable specification clips available at middleatlantic.com

EIA/TIA COMPLIANT

c UL us LISTED

GREENGUARD GOLD

PRODUCT CERTIFIED FOR LOW CHEMICAL EMISSIONS
UL.COM/GG
UL 2818

options:

- Leveling feet shall be model # FVS-LEVELERS-4
- Camera bracket shall be model# FVS-CMTB-1200-BK (black finish) and FVS-CMTB-1200-WH (white finish)
- Soundbar bracket shall be model# FVS-SBBU-1200

FlexView™ IFP Series

basic dimensions, manual adjustment

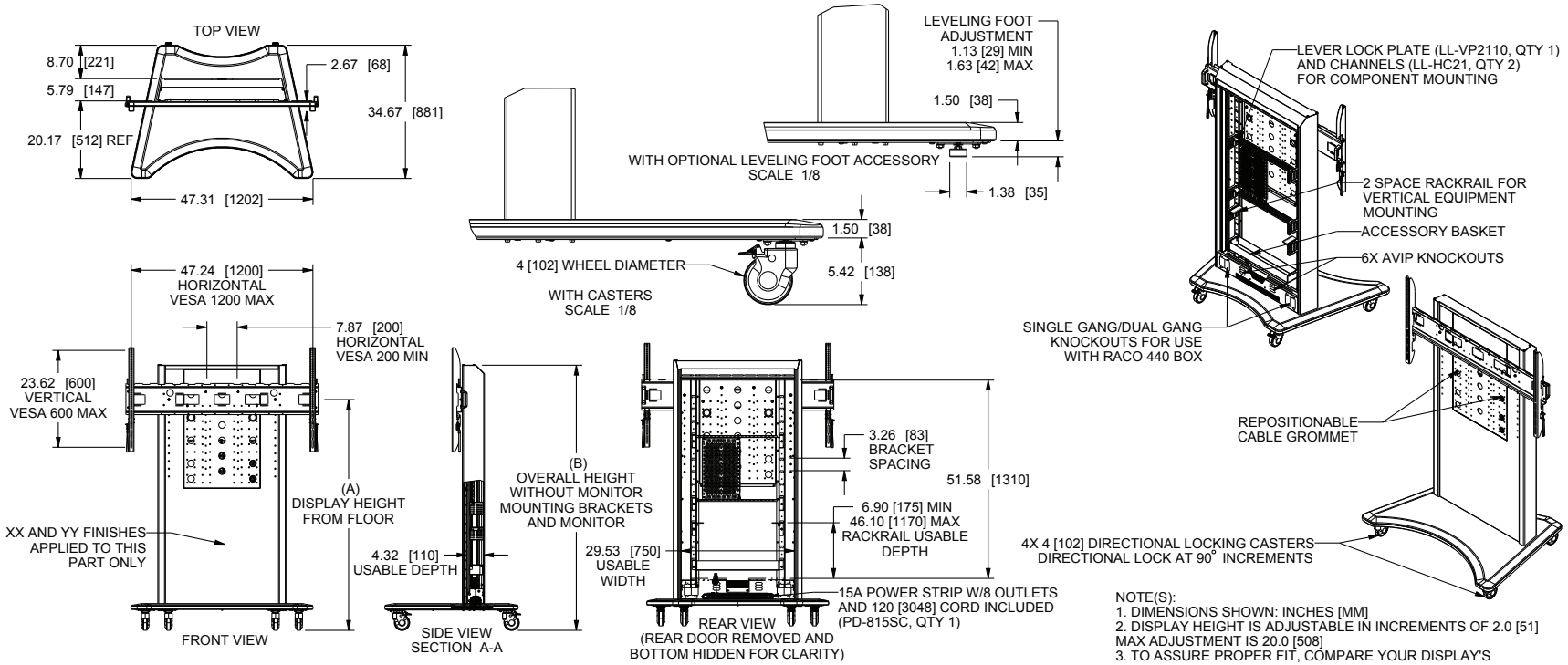

NOTE(S):
1. DIMENSIONS SHOWN: INCHES [MM]
2. DISPLAY HEIGHT IS ADJUSTABLE IN INCREMENTS OF 2.0 [51] MAX ADJUSTMENT IS 20.0 [508]
3. TO ASSURE PROPER FIT, COMPARE YOUR DISPLAY'S MOUNTING HOLE PATTERN (VESA), WEIGHT CAPACITY, AND OVERALL DIMENSIONS WITH THIS TECHNICAL SPECIFICATION

PART NUMBER	DISPLAY HEIGHT ADJUSTABILITY METHOD	COLOR	CASTERS OR LEVELING FEET*	(A) DISPLAY HEIGHT FROM FLOOR (SEE NOTE 2)		(B) OVERALL HEIGHT WITHOUT MONITOR MOUNTING BRACKETS AND MONITOR	RECOMMENDED SCREEN SIZE	WEIGHT CAPACITY	HORIZONTAL VESA PATTERN	MAX VERTICAL VESA PATTERN
				MINIMUM	MAXIMUM					
FVS-1200SC-BHXX	MANUAL	BLACK	CASTERS	40.0 [1016]	60.0 [1524]	68.98 [1752]	60 [1524] - 102 [2591]	50 LB [23 KG] INSIDE MAX	200, 400, 600, 800, 1000, 1200	600
			LEVELING FEET*	35.7 [907]	56.2 [1427]	64.7 [1643] - 65.2 [1656]		300 LB [136 KG] MONITOR ONLY MAX	200, 400, 600, 800, 1000, 1200	600
FVS-1200SC-WHYY	MANUAL	WHITE	CASTERS	40.0 [1016]	60.0 [1524]	68.98 [1752]	60 [1524] - 102 [2591]	320 LB [145 KG] MONITOR AND ACCESSORIES MAX	200, 400, 600, 800, 1000, 1200	600
			LEVELING FEET*	35.7 [907]	56.2 [1427]	64.7 [1643] - 65.2 [1656]			200, 400, 600, 800, 1000, 1200	600
XX = A5 FOR BLACK, A0 FOR 5TH AVE ELM, A3 FOR ASIAN NIGHT, B3 FOR GLAMOUR CHERRY, D4 FOR BLACK METAWAVE, D5 FOR BRONZE METAWAVE										
YY = A7 FOR BRITE WHITE, A0 FOR 5TH AVE ELM, A3 FOR ASIAN NIGHT, B3 FOR GLAMOUR CHERRY, D4 FOR BLACK METAWAVE, D5 FOR BRONZE METAWAVE										
*CASTERS ARE INCLUDED WITH CART, LEVELING FEET AVAILABLE AS ADDITIONAL ACCESSORY (MAP PART #: FVS-LEVELERS-4)										

FlexView™ IFP Series

basic dimensions, electric adjustment

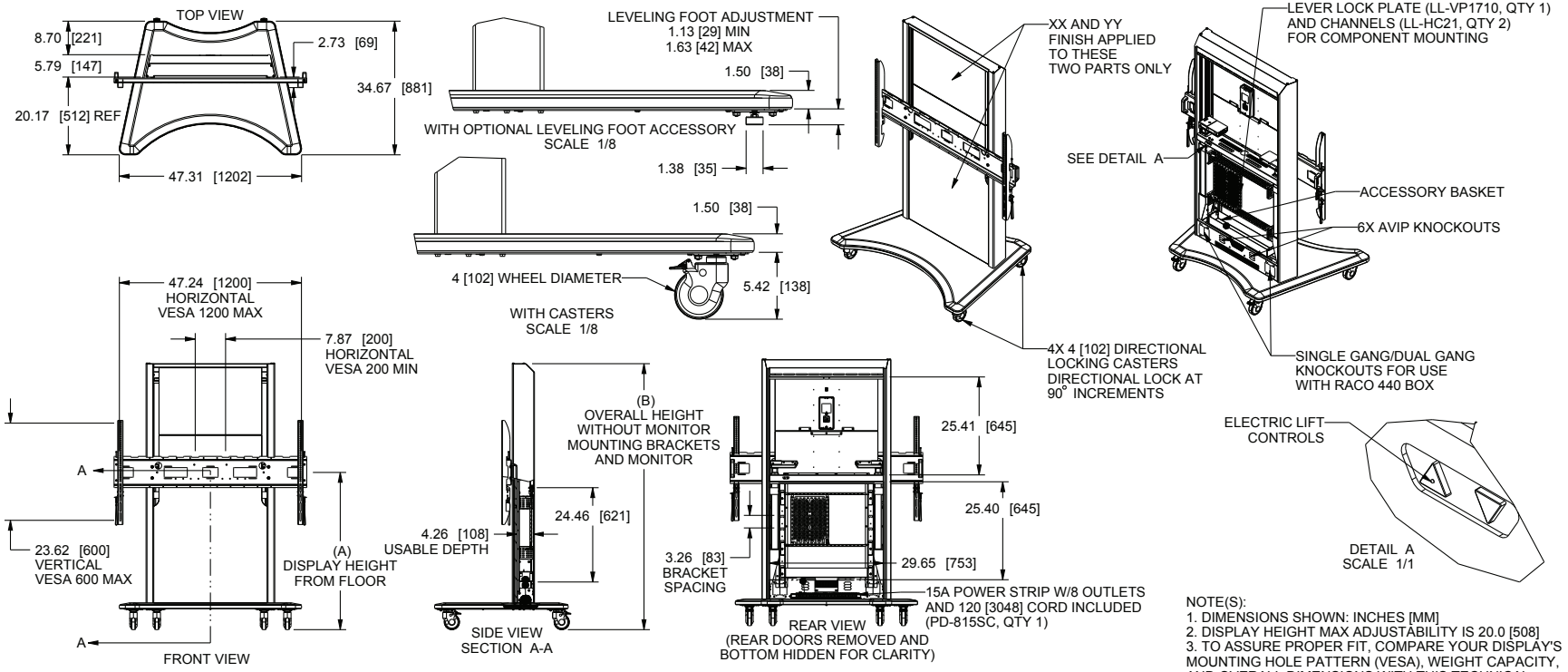

NOTE(S):
1. DIMENSIONS SHOWN: INCHES [MM]
2. DISPLAY HEIGHT MAX ADJUSTABILITY IS 20.0 [508]
3. TO ASSURE PROPER FIT, COMPARE YOUR DISPLAY'S MOUNTING HOLE PATTERN (VESA), WEIGHT CAPACITY, AND OVERALL DIMENSIONS WITH THIS TECHNICAL SPECIFICATION

PART NUMBER	DISPLAY HEIGHT ADJUSTABILITY METHOD	COLOR	CASTERS OR LEVELING FEET*	(A) DISPLAY HEIGHT FROM FLOOR (SEE NOTE 2)		(B) OVERALL HEIGHT WITHOUT MONITOR MOUNTING BRACKETS AND MONITOR	RECOMMENDED SCREEN SIZE	WEIGHT CAPACITY	HORIZONTAL VESA PATTERN	MAX VERTICAL VESA PATTERN
				MINIMUM	MAXIMUM					
FVS-1200EC-BHXX	ELECTRIC	BLACK	CASTERS	40.0 [1016]	60.0 [1524]	68.98 [1752]	60 [1524] - 102 [2591]	50 LB [23 KG] INSIDE MAX	200, 400, 600, 800, 1000, 1200	600
			LEVELING FEET*	35.7 [907]	56.2 [1427]	64.7 [1643] - 65.2 [1656]		300 LB [136 KG] MONITOR ONLY MAX	200, 400, 600, 800, 1000, 1200	600
FVS-1200EC-WHYY	ELECTRIC	WHITE	CASTERS	40.0 [1016]	60.0 [1524]	68.98 [1752]	60 [1524] - 102 [2591]	320 LB [145 KG] MONITOR AND ACCESSORIES MAX	200, 400, 600, 800, 1000, 1200	600
			LEVELING FEET*	35.7 [907]	56.2 [1427]	64.7 [1643] - 65.2 [1656]			200, 400, 600, 800, 1000, 1200	600
XX = A5 FOR BLACK, A0 FOR 5TH AVE ELM, A3 FOR ASIAN NIGHT, B3 FOR GLAMOUR CHERRY, D4 FOR BLACK METAWAVE, D5 FOR BRONZE METAWAVE										
YY = A7 FOR BRITE WHITE, A0 FOR 5TH AVE ELM, A3 FOR ASIAN NIGHT, B3 FOR GLAMOUR CHERRY, D4 FOR BLACK METAWAVE, D5 FOR BRONZE METAWAVE										
*CASTERS ARE INCLUDED WITH CART, LEVELING FEET AVAILABLE AS ADDITIONAL ACCESSORY (MAP PART #: FVS-LEVELERS-4)										

FlexView™ IFP Series

basic dimensions

NOTE(S):
1. DIMENSIONS SHOWN: IN [MM]
2. CAMERA MOUNT ADJUSTS VERTICALLY IN INCREMENTS OF 1.9 [49]
3. CAMERA MOUNT INCLUDES BOTH 8X8 AND 8X12 CAMERA MOUNTING PLATES.
4. WEIGHT CAPACITY: 20 LB [9 KG]
5. CAMERA MOUNT AND SOUNDBAR MOUNT CAN NOT BE MOUNTED TOGETHER IN THE SAME POSITION BUT THEY CAN BE MOUNTED IN OPPOSITE POSITIONS. FOR EXAMPLE, SOUND BAR MOUNT MOUNTED ABOVE MONITOR AND CAMERA MOUNT MOUNTED BELOW MONITOR.
6. PART NUMBERS: FVS-CMTB-128-BK (BLACK) AND FVS-CMTB-128-WH (WHITE)

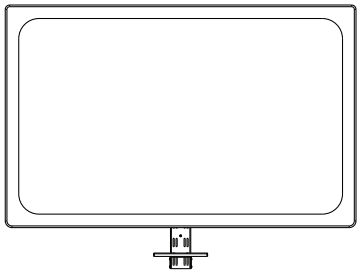

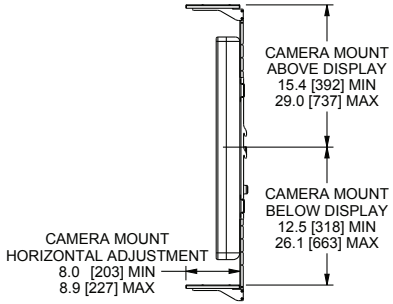

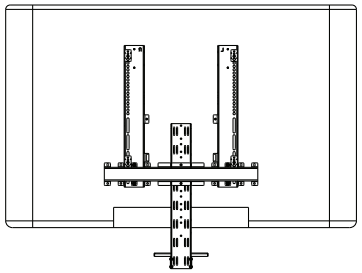

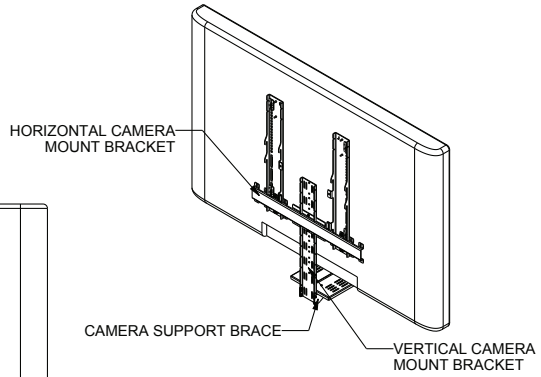

8 [203] X 8 [203]
CAMERA MOUNTING PLATE
SCALE 3/16

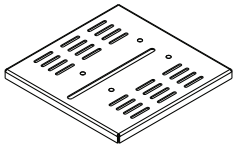

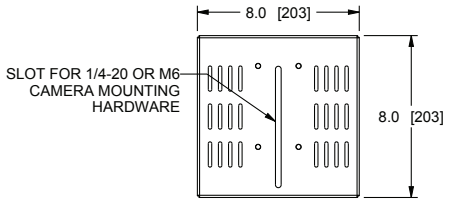

12 [305] X 8 [203]
CAMERA MOUNTING PLATE
SCALE 3/16

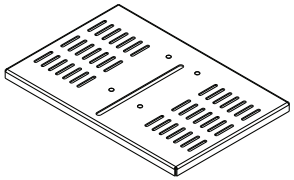

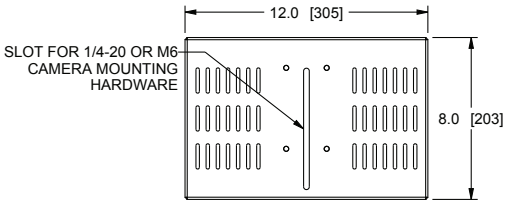

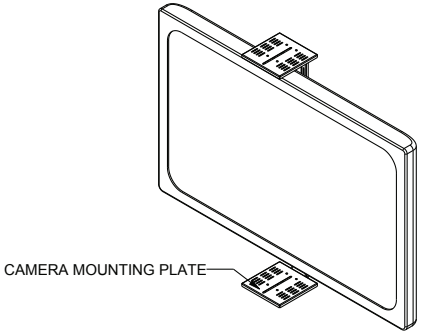

CAMERA MOUNT SHOWN ABOVE
AND BELOW DISPLAY FOR
REPRESENTATION ONLY

FlexView™ IFP Series

basic dimensions

NOTE(S):
1. DIMENSIONS SHOWN: IN [MM]
2. WEIGHT CAPACITY: 20 LB [9 KG]
3. CAMERA MOUNT AND SOUNDBAR MOUNT CAN NOT BE MOUNTED TOGETHER IN THE SAME POSITIONS BUT THEY CAN BE MOUNTED IN OPPOSITE POSITIONS. FOR EXAMPLE, SOUND BAR MOUNT MOUNTED ABOVE MONITOR AND CAMERA MOUNT MOUNTED BELOW MONITOR
4. PART NUMBER: FVS-SBBU-1200

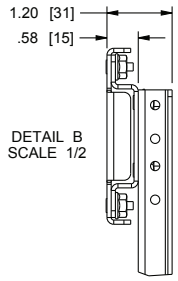

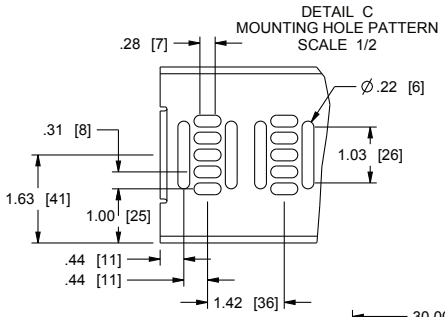

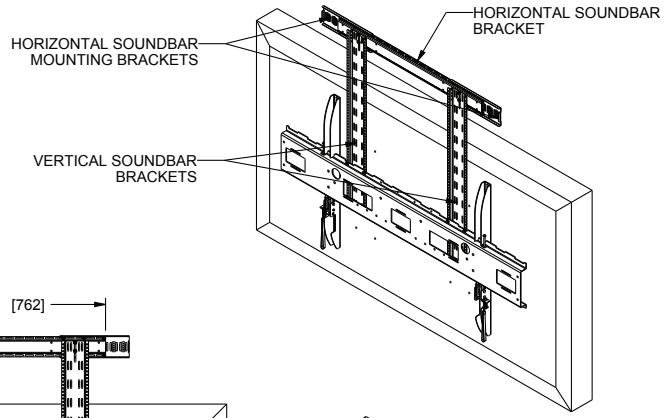

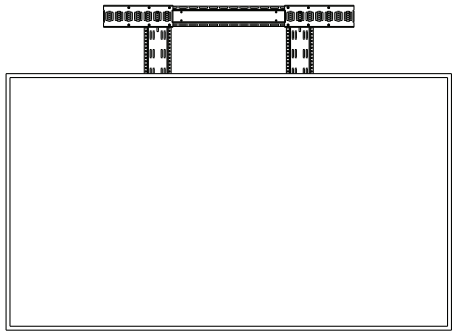

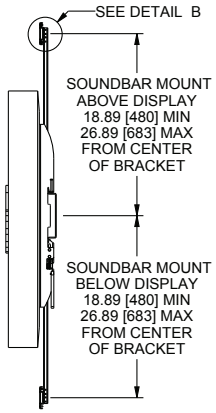

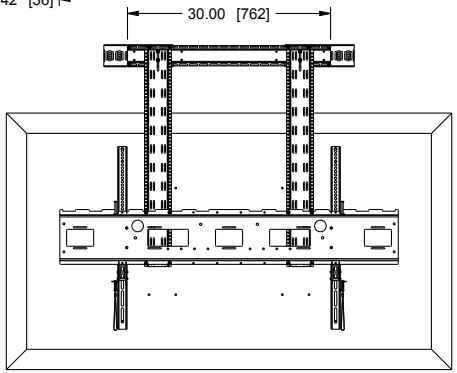

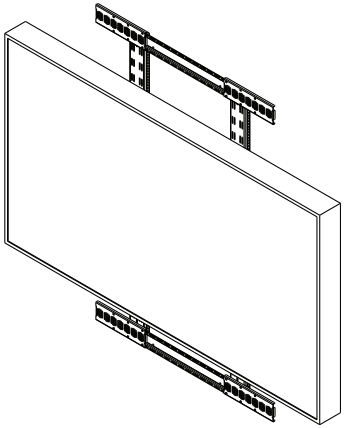
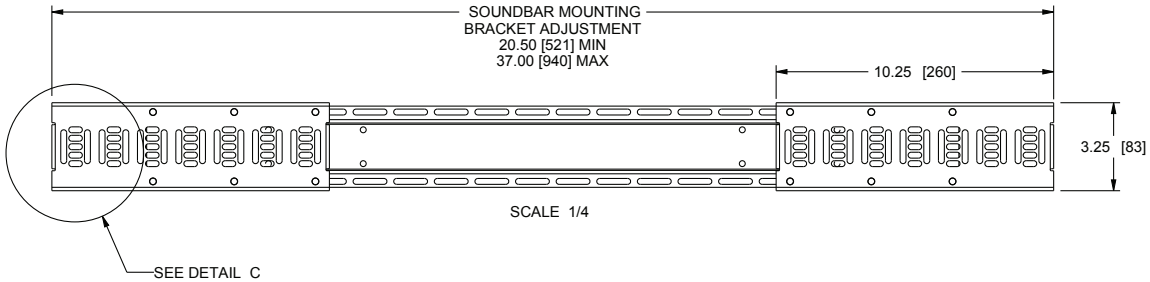
SOUNDBAR MOUNT SHOWN ABOVE AND BELOW DISPLAY FOR REPRESENTATION ONLY