Single Gang Electrical Faceplate

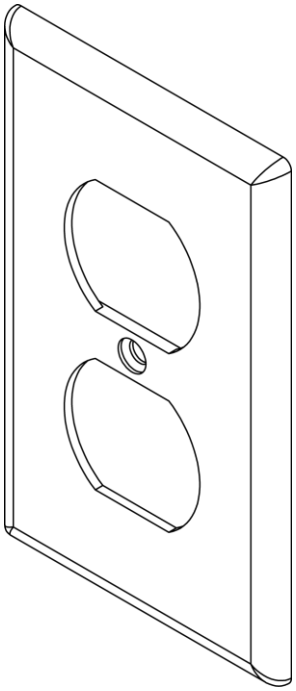

Package Includes

A. Single Gang Electrical Faceplate, **1 Piece**.

B. #6-32 x ¾" Oval Head, Countersink, Deep Slotted Drive, Machine Screw, **1 Piece**

Features and Benefits

- Configured to fit standard single gang electrical outlet
- Designed for commercial or residential applications
- Rugged and durable construction
- Accepts IC107 eletrical inserts
- ANSI/TIA-568-C and UL 1863 Compliant

I 888-ASK-4ICC icc.com csr@icc.com I

© Copyright 2017, ICC. This document and the designs, specifications and information contained herein are the property of ICC. Reproduction, modification, alteration or unauthorized use without ICC's approval is strictly prohibited. ICC and the ICC logo are registered trade name and trademark of ICC. All rights reserved.

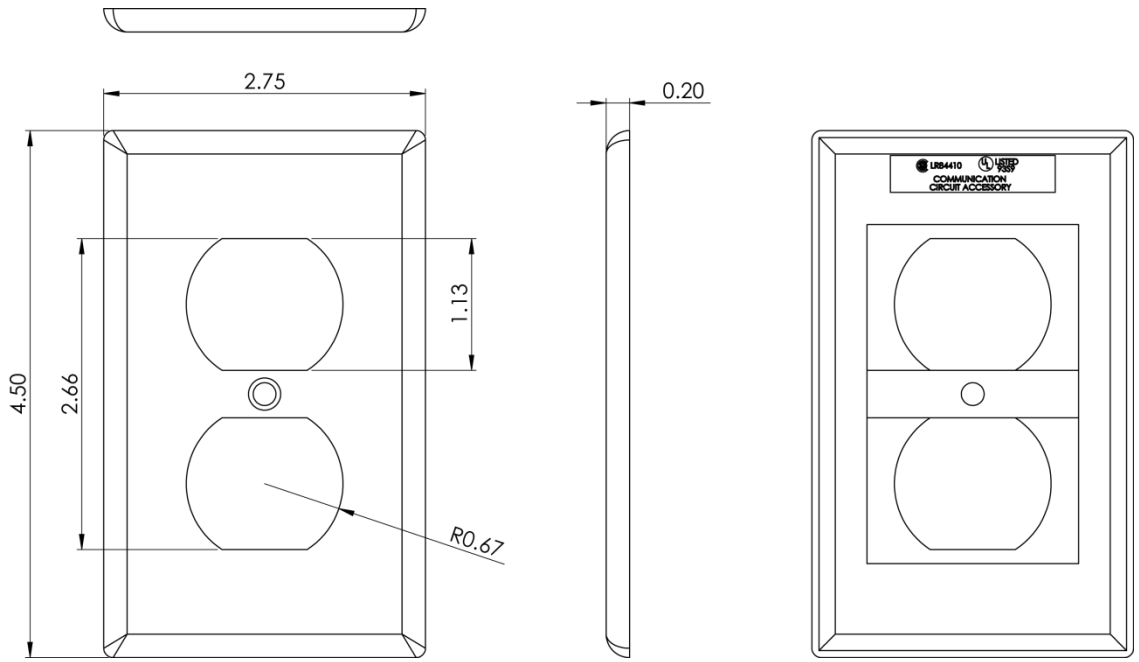

Specifications

- Material: ABS, UL 94V-0
- Finish Texture
- Color: XX: IV-Ivory, WH-White

I 888-ASK-4ICC icc.com csr@icc.com I

© Copyright 2017, ICC. This document and the designs, specifications and information contained herein are the property of ICC. Reproduction, modification, alteration or unauthorized use without ICC's approval is strictly prohibited. ICC and the ICC logo are registered trade name and trademark of ICC. All rights reserved.