INSTALLATION INSTRUCTIONS

LEVITON®

Outdoor Meter - Load Center Combination Enclosure

Cat. Nos. LP3xx-MC, LP4xx-MC

IMPORTANT SAFETY INSTRUCTIONS - READ ALL INSTRUCTIONS BEFORE USING.

PK-A3218-10-00-0C

⚠ WARNINGS

- **TO AVOID FIRE, SHOCK, OR DEATH: TURN OFF POWER THAT IS SUPPLYING THIS EQUIPMENT AND CONFIRM POWER IS OFF** before installing, removing, or servicing this equipment.
- This equipment **MUST BE** installed and serviced by an electrician.
- To be installed and/or used in accordance with electrical codes and regulations.
- Use **ONLY** approved fittings and clamps to avoid damage to wires.
- Leviton® circuit breakers **MUST BE** used with a Leviton circuit breaker enclosure.
- Before providing power to the load center, check all electrical connections and confirm that the wiring is correct.
- Replace all doors and covers before connecting power to this equipment.
- **SAVE THESE INSTRUCTIONS.**

LIMITED PRODUCT WARRANTY
For Leviton's limited product warranty, go to www.leviton.com. For a printed copy of the warranty, you may call 1-800-323-8920.
Patents covering this product, if any, can be found on Leviton.com/patents.

INSTALLATION

WARNING: TO AVOID FIRE, SHOCK, OR DEATH: TURN OFF POWER THAT IS SUPPLYING THIS EQUIPMENT AND CONFIRM POWER IS OFF before installing, removing, or servicing this equipment.

Step 1: Remove meter and wiring compartment covers *(Figure 1).*

a. Remove **meter cover (B)** by loosening the **securing screw (J)** and sliding cover down and out.
b. Remove **wiring compartment cover (C)** by loosening the **securing screw (K)**, sliding the **securing latch (A)** upward, and sliding cover out and down.
c. Slide the **wiring compartment cover (C)** up and out.

Step 2: *(Optional)* **Remove load center door.**
NOTE: The load center door can be removed for easier installation.

a. Lift **door (D)** upward to remove from **hinge (E)** *(Figure 2).*
b. When installation is complete, align the door **hinge (E)** with the hinge pin and insert downward until door is seated.

Step 3: Wire bottom feed.
NOTE: Before removing any knockouts from the enclosure, consult local electrical codes to determine the knockout requirements.

a. To remove **knockouts (F)**, first strike the center of the knockout.
b. Pry each **ring (G)** up, one at a time, and grip both ends with a pair of pliers.
c. Use pliers to bend the **rings (E)** until they disconnect from the enclosure *(Figure 3).*

Step 4: Mount the enclosure.

a. Remove the **deadfront (S)** by loosening the **securing screw (T)** and lifting the **deadfront (S)** off the enclsoure *(Figure 9).*
b. Remove **mounting knockouts (H)** from the back of the enclosure *(Figure 4).*
c. Use outdoor-approved screws or nails (not provided) in the **mounting knockouts (H)** to secure the enclosure to the wall.

Figure 1

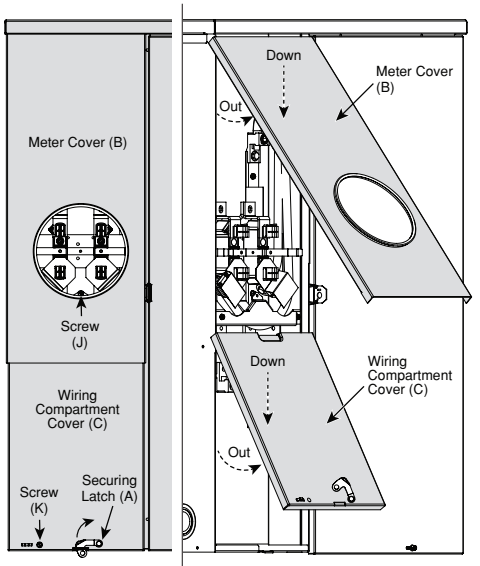

Figure 2

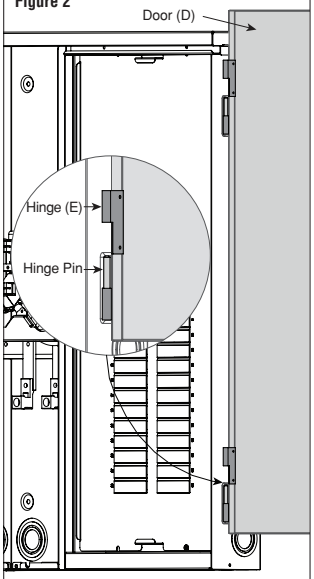

Figure 3

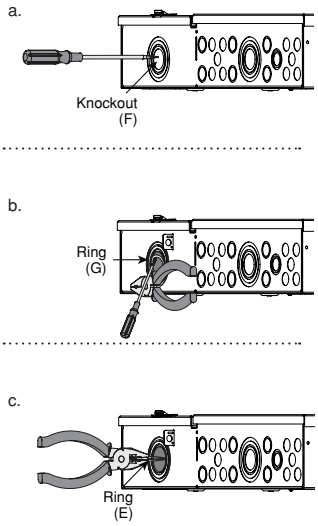

Figure 4

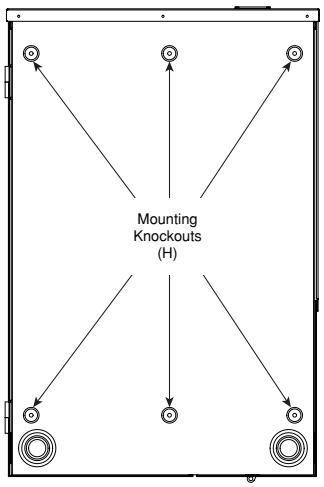

WEB VERSION

Step 5: Connect phase, neutral, and ground conductors.
WARNING: Use **ONLY** approved fittings and clamps to avoid damage to wires.

- **a.** Bring the **phase**, **neutral,** and **ground** conductors into the enclosure through the bottom feed knockout.
- **b.** Connect the **phase**, **neutral,** and **ground** conductors to the appropriate terminals and torque to specifications in the Terminations Table *(Figure 5)*.

Step 6: Install branch circuit breakers.
WARNING: Leviton® circuit breakers **MUST BE** used with a Leviton circuit breaker enclosure.

- **a.** Strip and connect the **load phase (M)** and **load neutral (N)** wires to the **load terminals (O),** and ground wire to the **ground bus (P)** of the circuit breaker enclosure *(Figure 6)*. Strip wires and torque load terminals to specifications in the Terminations Table.
  NOTE: Ensure that the main breaker is in the OFF position before installing any branch circuit breakers.
  NOTE: Ensure that all branch circuit breakers are in the OFF position before installing into the panel.
- **b.** Align the **hooks and guides (Q)** of the branch circuit breaker with the panel and press until breaker snaps into place *(Figure 7)*.

Step 7: Install the deadfront.
NOTE: Twist-outs (R) must be removed for each position that contains a branch circuit breaker. Fill any unused open spaces in cover using filler plates (see filler plate instructions).

- **a.** To remove **twist-outs (R)**, first strike with a screwdriver, then twist with pliers until detached *(Figure 8)*.
- **b.** Install **deadfront (S)** by sliding it inward above the side wall protrusions on each side at a 45-degree angle until bottom portion of the **deadfront (S)** is seated into enclosure *(Figure 9)*.
- **c.** Secure the bottom of the **deadfront (S)** with the **securing screw (T)**.
- **d.** Replace the meter and wiring compartment covers *(Refer to Step 1)*.

Step 8: Complete the installation.
WARNING: Before providing power to the load center, check all electrical connections and confirm that the wiring is correct.
WARNING: Replace all doors and covers before connecting power to this equipment.

- **a.** Ensure that the main and all branch circuit breakers are in the OFF position. To energize, first turn ON the main breaker, and then turn ON each individual branch circuit breaker.

TERMINATIONS

Termination Point	Wire Material	Wire Gauge	Strip Length	Torque
Phase & Neutral Line Terminals	Copper / Aluminum	#3 AWG - 300 MCM	1.0 in.	375 in-lbs.
Ground Terminal	Copper / Aluminum	#4 AWG - 2/0 AWG	0.75 in.	50 in.-lbs
Load Phase (brass) & Load Neutral (silver)	Copper	(1) #4 AWG - #8 AWG, Solid or Stranded	0.4 in.	45 in.-lbs
		(1) #10 AWG, Solid or Stranded		35 in.-lbs
		(2) #14 AWG - #10 AWG, Solid		35 in.-lbs
		(1) #12 AWG - #14 AWG, Solid or Stranded		25 in.-lbs.
		(2) #14 AWG, Stranded		25 in.-lbs.
		(2) #12 AWG, Stranded		25 in.-lbs.
	Aluminum	(1) #4 AWG - #6AWG, Stranded		45 in.-lbs
		(1) #8 AWG, Stranded		35 in.-lbs
		(2) #12 AWG - #10 AWG, Solid		35 in.-lbs
		(1) #10 AWG - #12 AWG, Solid		25 in.-lbs.
		(2) #12 AWG, Solid		25 in.-lbs.
		(2) #10 AWG, Solid		25 in.-lbs.
Ground Bus	Copper/ Aluminum	(1) #6 AWG - #4 AWG	0.5 in.	35 in.-lbs
		(1) #8 AWG		25 in.-lbs
		(1) #14 AWG - #10 AWG		20 in.-lbs
	Copper	(2) #14 AWG - #10 AWG, Solid or Stranded		20 in.-lbs
		(1) #14 AWG and (1) #12 AWG, Solid		20 in.-lbs
		(1) #14 AWG and (1) #10 AWG, Solid		20 in.-lbs
		(1) #12 AWG and (1) #10 AWG, Solid		20 in.-lbs
	Aluminum	(1) #12 AWG - #4 AWG, Solid or Stranded		20 in.-lbs
		(2) #12 AWG - #10 AWG, Solid or Stranded		20 in.-lbs
		(1) #12 AWG and (1) #10 AWG, Solid		20 in.-lbs

Figure 5

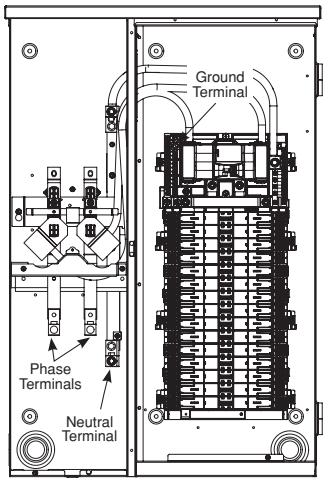

Figure 6

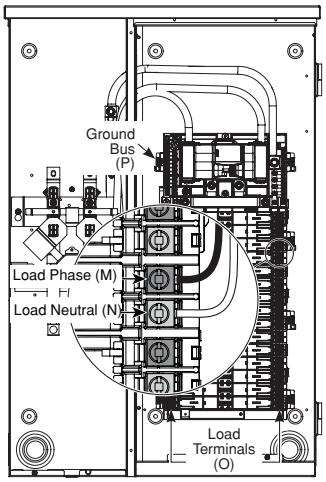

Figure 7

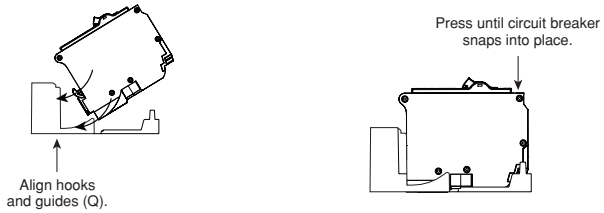

Figure 8

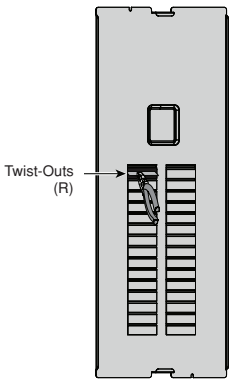

Figure9

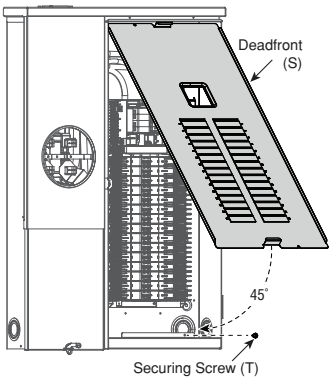

WEB VERSION