Wall Plates

Weatherproof Plates

Weatherproof Cast Aluminum Lockable Cover

Features

- NEMA Type 3R
- Heavy-duty/High strength
- Flushed enclosure and cover

Ordering Information

Description	Device Color	UPC	Catalog Number
Weatherproof Cast Aluminum Lockable Cover	Aluminum	883778309687	WP4600

Listings

cULus Listed

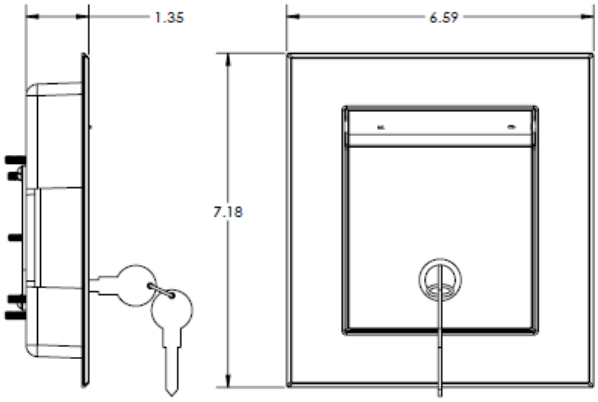

Specifications

Cover	Cast Aluminum
Box	Galvanized Steel
Gasket	Crosslinked Polyethylene
Lock Type	Cobra Cam Lock

Performance

Environmental

Weatherproof	3R Rated
Operating Temperatures	Maximum continuous 75°C minimum -40°C (without impact)

Dimensions in Inches (mm)

Hubbell Wiring Device-Kellems • Hubbell Incorporated (Delaware) • 40 Waterview Drive • Shelton, CT 06484

Phone (800) 288-6000 • Fax (800) 255-1031 • Specifications subject to change without notice.

Wiring Device-Kellems