Raceway

Non-Metallic Raceway

Non-Latching PremiseTrak® 2-Gang Deep Box

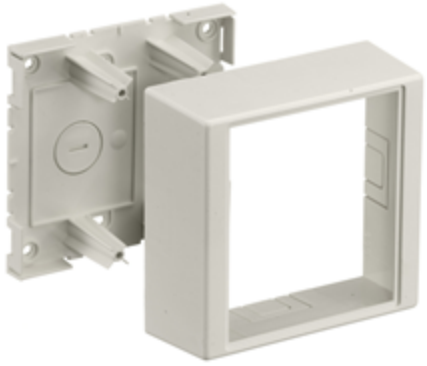

Features

- For deep devices or applications where additional room is beneficial. Uses 2-gang “KP”, "IMF", or “IFP” plates for power or data applications.
- See page R-63 for recommended plate options.

Ordering Information

Description	Color	UPC Number	Catalog Number
2-Gang Deep Box	Office White	783585337852	**PT12TGB**

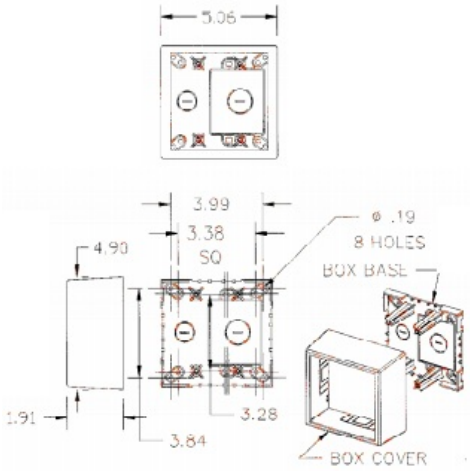

Listings

UL Listed
CSA Certified

Specifications

Height	4.90"
Width	5.06"
Length	1.91"

Online Resources

Customer Use Drawing
eCatalog
Installation Instructions

Dimensions in Inches (mm)

Hubbell Wiring Device-Kellems • Hubbell Incorporated (Delaware) • 40 Waterview Drive • Shelton, CT 06484
Phone (800) 288-6000 • Fax (800) 255-1031 • Specifications subject to change without notice.

Wiring Device-Kellems