Provolt™ 0-10V Dimming Room Controllers (PRC)

Easy-to-Install Self-Contained Lighting Control Solution

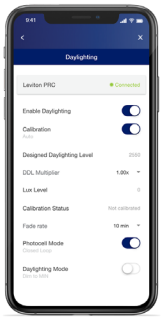

PRC Daylighting Screen

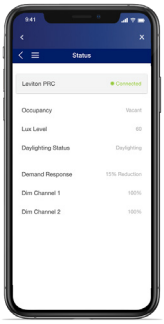

PRC Status Screen

Description

The Leviton exclusive Provolt™ Room Controllers (PRC) offer high performance, code compliant, advanced room configuration in one easy-to-install device. Installers can download the Provolt Bluetooth Mobile App for quick-and-easy room configuration and testing with any iOS or Android device.

The PRC's features meet advanced design requirements for single room/area dimming applications offering easy configuration and operational testing for single 0-10V manual dimming zone, occupancy sensing, plug load control, partial-ON, partial-OFF, two daylight harvesting zones, area control and demand response.

Automatic Room Configuration

The industry-exclusive enhanced automation feature optimizes lighting by monitoring and adjusting to new technology introduced to a room while preventing interferences to the PRCs signal during the life of the product.

- Initial power-up automatically starts room specific calibration
  - Automatic Daylight Harvesting Calibration (AutoCal)
- Continual room optimization
  - Room behavior and trending data adjusts automatic OFF timer
  - Ultrasonic (U/S) sensor sensitivity adjustments to reduce false ONs and false OFFs
  - U/S processing keeps room lighting operational by detecting other U/S sources and adjusting or shutting lights OFF as required
- Uploading and downloading room configuration templates reduces errors, speeds installation and testing and troubleshooting

Features

- Can be used to comply with IECC, ASHRAE 90.1. and 2022 Title 24, Part 6
  - Occupancy/vacancy sensing
  - 0-10V dimming
  - Daylight harvesting
  - Partial-ON, partial-OFF
  - Demand response
  - Receptacle control requirements
- Available in 450 to 2,000 square foot field-of-view units
- Uses U/S (Doppler shift) motion detection gives maximum sensitivity and PIR motion detection and prevents false triggers
- Manual area control available for 3-way/multi-way applications with the Provolt (PLVSW) keypads (must all be same style)
- Manual control for single area dimming (dim both primary and secondary daylighting zones up and down simultaneously)
- AutoCal feature—Digital Daylighting Level automatically calibrates photocell to specified lighting design
- Simplified daylight harvesting control of primary and secondary daylighting zones with full range 0-10V dimming
  - Primary zone dimmed up and down from photocell
  - Secondary zone dimmed up and down with offset from primary zone
- Two light pipes are included for both open (angled) and closed loop (flat and angled) daylight harvesting
  - The angled light pipe provides directional fine tuning and alignment to natural light source for closed loop applications
- Ladderless Commissioning™ and programming through Bluetooth-enabled iOS or Android smart devices
- Visual RGB LED indicator for status and troubleshooting

Leviton Manufacturing Co., Inc. Lighting & Controls
10385 SW Avery Street, Tualatin, OR 97062 **tel** 800-736-6682 **tech line** (6:00AM-4:00PM PT Mon-Fri) 800-959-6004
©2023 Leviton Manufacturing Co., Inc. All rights reserved. Subject to change without notice.

Features, cont'd

- Easily test room configuration using a smart device as a calibration, measurement and testing tool
- Connect a OPP20 power pack to a two circuit room controller for a plug load control solution
- Industry-exclusive H.I.S. (High Inrush Stability) technology
  - Tested to 1.2 million switching cycles under standard loads
  - Zero-crossing circuitry for extended life of the relay
  - Latching relay provides dependability and robust performance for all load types
- Industry-exclusive "fail safe" circuitry: in the event of product failure, return-to-close feature causes the relay to default ON which eliminates life safety concerns

Placement Diagrams

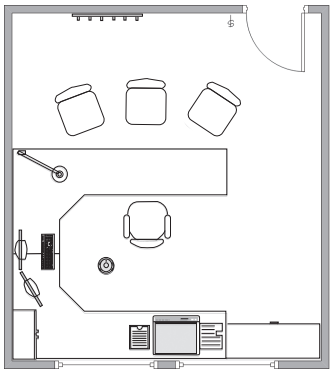

Open Loop Mode

- Angled light pipe
- Mounted within 4 feet of window

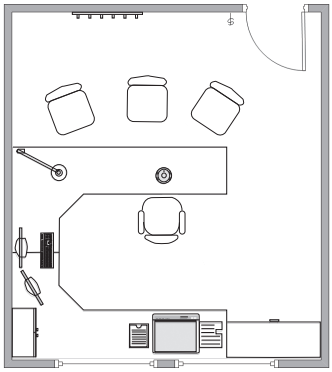

Closed Loop Mode

- Flat light pipe
- Mounted 6-8 feet from window or within the primary daylight zone
- Mounted above work surface

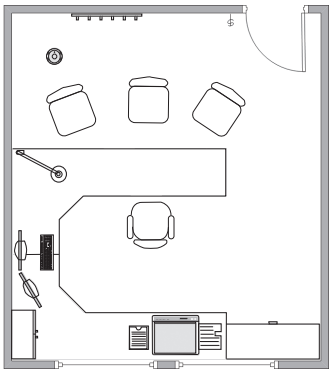

Closed Loop Mode

- Angled light pipe angled toward work surface
- Mounted 12 feet of window
- Mounted in location optimized to prevent false occupancy triggers

App Features

Easily download the Provolt Bluetooth Mobile App to an iOS or Android smart device and pair to the PRC using Bluetooth technology.

- Create custom templates for easy multi-room replication of room controller settings
- Select between Auto-ON/Auto-OFF and Manual-ON/Auto-OFF
- Enable/disable partial-ON and partial-OFF and set the partial-ON and partial-OFF levels
- Set occupancy sensor time-out
- Set secondary timer for partial-OFF to full-OFF state (infinity by default)
- Set vacancy and secondary timeouts between 30s-30mins
- Enable/disable receptacle/HVAC control for secondary relay
- Set the offset of the secondary daylight zone based off the primary daylight zone
- Initiate field-of-view walk test
- Single-tech and multi-tech selection for either PIR, U/S or Multi-Tech solutions
  - Set PIR or U/S sensitivity independently
- Monitor status of all inputs
  - Integrated occupancy sensor(s)
  - Integrated photocell
  - Local wall keypad
  - Demand response
- Enable 24 hour automatic daylight harvesting calibration
- Daylight harvesting adjustments: open loop, closed loop, increase/decrease DDL, fade rate, dim to min, dim to OFF
- Manually adjust DDL set point to fine tune for room type after auto-configuration
- Over-the-Air (OTA) updates: allows user to update PRC firmware in the field via the App
  - Reset to factory defaults

Wiring Diagrams

Single Room Single Daylighting Control

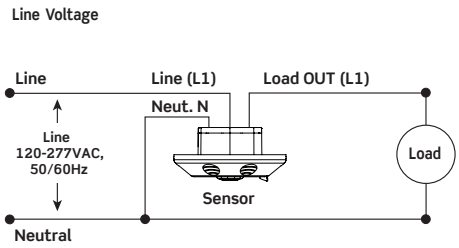

Single Room Multiple Daylighting Control

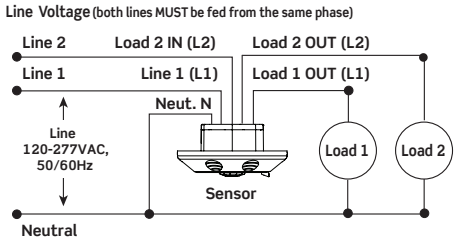

0-10V runs CLASS 1 or CLASS 2 per NEC standards

Field of View Diagrams

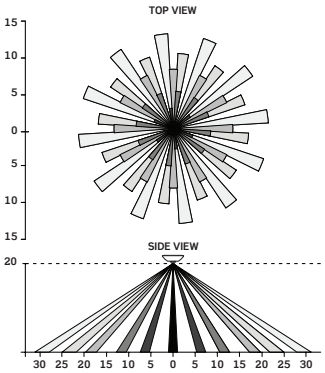

Mid-Range Lens - Red

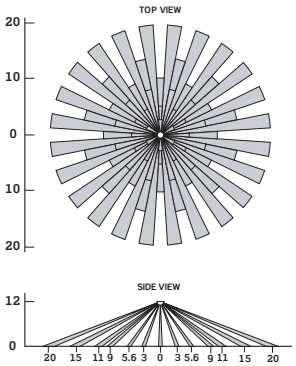

Extended Range - Black

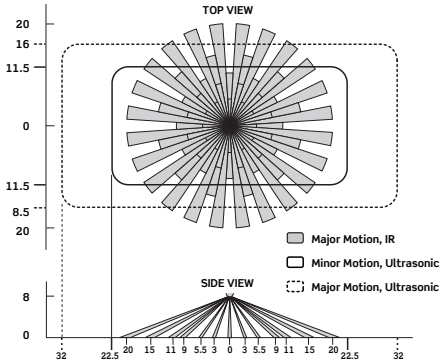

Multi-Tech Models - extended range, black lens

Application Diagram*

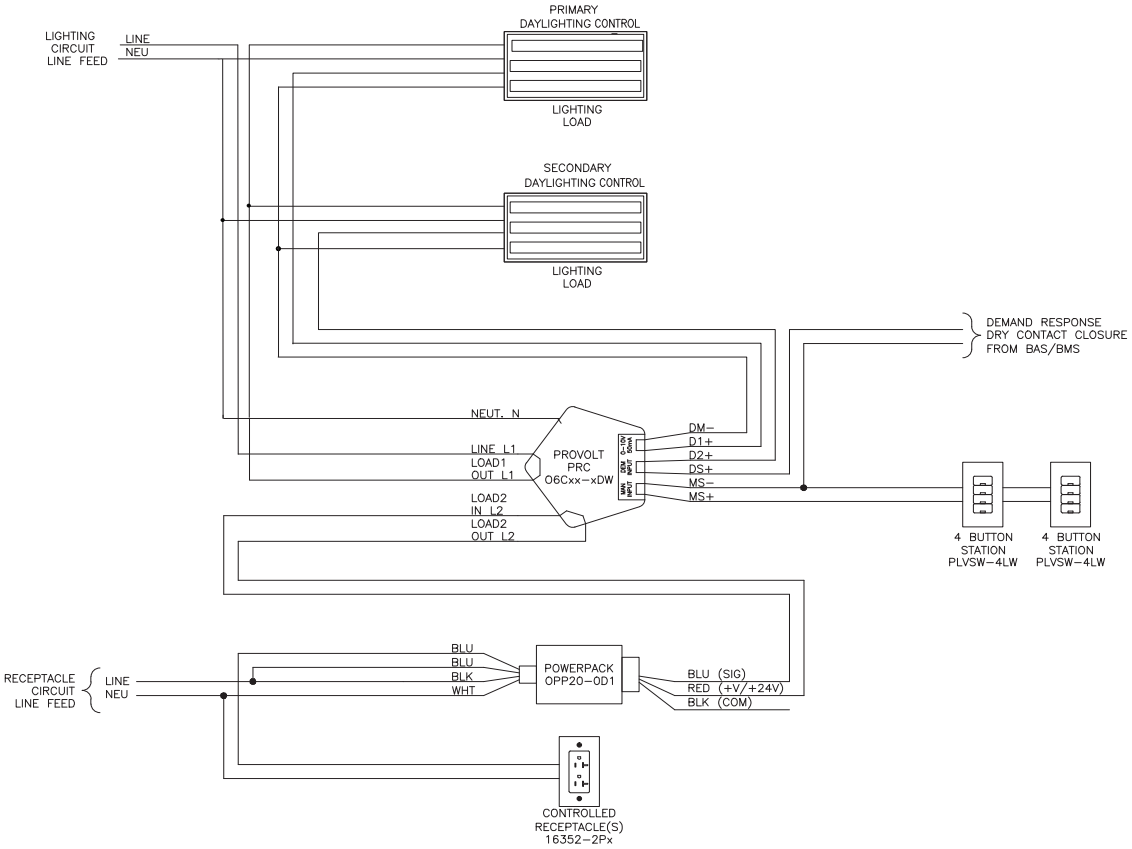

*See the PRC Application Cookbook for additional wiring diagrams.

Leviton Manufacturing Co., Inc. Lighting & Controls
10385 SW Avery Street, Tualatin, OR 97062 **tel** 800-736-6682 **tech line** (6:00AM-4:00PM PT Mon-Fri) 800-959-6004
©2023 Leviton Manufacturing Co., Inc. All rights reserved. Subject to change without notice.

Installation

- Easy installation into junction boxes with Leviton-exclusive screw guides, coasters and terminal blocks
- Front cover snaps on and off for ease of installation
- Sensors conveniently mount to a standard 4” x 4” square or octagon electrical box per NEC standards. The square junction box requires a mud ring.
- Color matching via paintable front cover

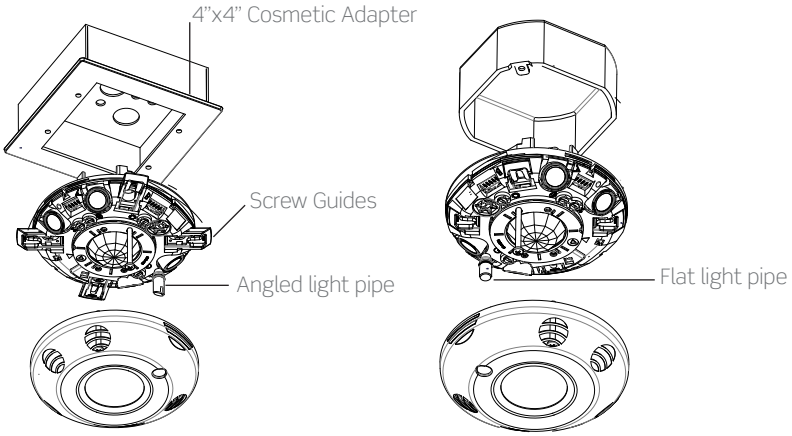

Dimensions Diagram

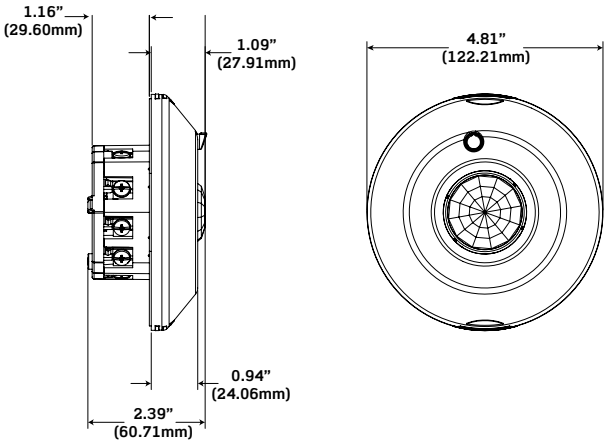

PRC Low Voltage Keypads

PLVSW-1LW

PLVSW-2LW

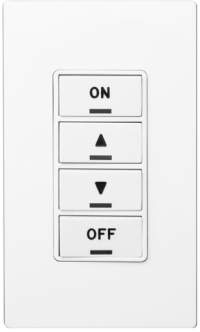

PLVSW-4LW

Provolt Low Voltage Keypads are available in 1, 2, and 4 button options. See ordering information or the Provolt Low Voltage Keypads Data Sheet for more information.

Specifications

Header		
	120V	**277V**
Input Voltage	120 50/60Hz	277V 50/60Hz
Current Consumptions	8A, Electronic Ballast/LED Driver, 800 W (VA), Tungsten, Ballast, 1/4 HP	5A, Electronic Ballast/LED Driver, 1200W (VA), Ballast, 1/3 HP
Low Voltage Wiring	**Class 2 0-10V Wiring**	
	18 gauge stranded recommended, 0-10V sinking 50mA max	
	Class 2 Low Voltage Wiring	
	18 gauge stranded recommended, maximum wiring: 500 feet total system, 0-28VDC, 2mA-50mA	
General		
Daylighting Zones	Single and dual zone daylighting available	
Dimming Area Control	Single area control (keypad simultaneously controls primary and secondary daylighting zones)	
Field of View	PIR	U/S
	450 sqft or 1,500 sqft with included lenses	2,000 sqft
Ultrasonic Frequency	40 Khz	
Photocell	0-200FC (0-2,000 LUX)	
Wireless		
Bluetooth	2.4 Ghz, 30ft max	
Environmental		
Operating Temperature	32 to 104°F (0 to 40°C)	
Storage Temperature	15 to 160°F (-26 to 71°C)	
Relative Humidity	0-90% non-condensing	
Other		
Energy Codes	Can be used to comply with IECC, ASHRAE 90.1, and 2019 Title 24, Part 6 occupancy/vacancy sensing, 0-10V dimming, daylight harvesting, partial-ON, partial-OFF, demand response and receptacle control requirements	
Listings	IP20 Rated, UL 773A (Occupancy Standard), UL 924 (Emergency Equipment), cUL Listed, CE Compliant, NOM Certified, RoHS Compliant, NY LLC48 Compliant	
Warranty	5-Year Limited	

Ordering Information

Provolt 0-10V Dimming Room Controllers	
Cat. No.	**Description**
O5C20-MDW	Provolt Room Controller, primary daylighting control, ceiling mount, M/T, 2,000sqft, 0-10V DC sinking signal for dimming ballast or LED driver, 120-277V (both lenses included)
O6C20-MDW	Provolt Room Controller, primary and secondary daylighting control, ceiling mount, M/T, 2,000sqft, 0-10V DC sinking signal for dimming ballast or LED driver, 120-277V (both lenses included)
O5C04-IDW	Provolt Room Controller, primary daylighting control, ceiling mount, PIR, 450-1,500sqft, 0-10V DC sinking signal for dimming ballast or LED driver, 120-277V (both lenses included)
O6C04-IDW	Provolt Room Controller, primary and secondary daylighting control, ceiling mount, PIR, 450-1,500sqft, 0-10V DC sinking signal for dimming ballast or LED driver, 120-277V (both lenses included)
Provolt Mobile App	Download for free from Google Play or the Apple App Store

Leviton Manufacturing Co., Inc. Lighting & Controls
10385 SW Avery Street, Tualatin, OR 97062 **tel** 800-736-6682 **tech line** (6:00AM-4:00PM PT Mon-Fri) 800-959-6004
©2023 Leviton Manufacturing Co., Inc. All rights reserved. Subject to change without notice.

Ordering Information

Provolt Low Voltage Keypads	
Cat. No.	**Description**
PLVSW-1LW	Provolt Keypads, 1-button ON/OFF controller for use with Provolt Room Controllers
PLVSW-2LW	Provolt Keypads, 2-button ON/OFF controller for use with Provolt Room Controllers
PLVSW-4LW	Provolt Keypads, 4-button ON/OFF controller for use with Provolt Room Controllers
RDGSW-1Ex*	1-button Color Change Kit (blank)
RDGSW-2Ex*	2-button Color Change Kit (blank)
RDGSW-4Ex*	4-button Color Change Kit (blank)
RDGSW-1Fx*	1-button Custom Engraved Color Change Kit
RDGSW-2Fx*	2-button Custom Engraved Color Change Kit
RDGSW-4Fx*	4-button Custom Engraved Color Change Kit

*Replace x to indicate color: White (W), Ivory (I), Light Almond (T), Gray (G), Black (E) and Red (R). Color change kits are blank and available for custom engraving for button markings.

Leviton Manufacturing Co., Inc. Lighting & Controls
10385 SW Avery Street, Tualatin, OR 97062 **tel** 800-736-6682 **tech line** (6:00AM-4:00PM PT Mon-Fri) 800-959-6004

Leviton Manufacturing Co., Inc. Global Headquarters
201 North Service Road, Melville, NY 11747-3138 **tel** 800-323-8920 **tech line** (8:00AM-10:00PM ET Mon-Fri, 9:00AM-7:00PM ET Sat, 9:00AM-5:00PM ET Sun) 800-824-3005

Visit our Website at: www.leviton.com/provolt
©2023 Leviton Manufacturing Co., Inc. All rights reserved. Subject to change without notice.

G-9661K/F23-mm
REV JUL 2023