Mounted Zone Cabling Enclosures and Brackets

Wall Mounted Enclosure Accessory

Replacement Lock and Key

Features

- For use with all QuadCab wall mounted enclosures

Ordering Information

Key	Enclosure Type	Catalog Number	UPC Number
333	Zone Ceiling	**KEY333**	662620844206

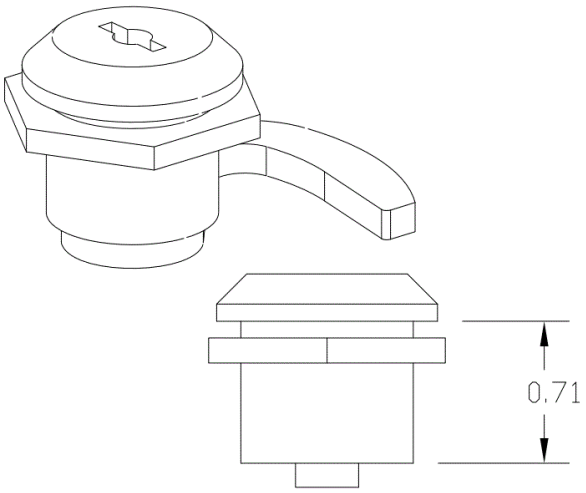

Specifications

Accessory for	Wireless Access Box

Characteristics

Installation	Wireless Access Points

Accessories

Black Velcro Roll	**HVFBK575**
9" Velco Strips, Yellow	**MCCMV9YL10**

Online Resources

eCatalog