Tri-Power Pop Up Counter Receptacles

20A 125V Tamper-Resistant Tri-Power Pop Up Counter Receptacle

Surface Mount, Nickel & Color Kit

HUBBELL

Features

- Wireless Charging, A & C USB Ports, and 20 Amp 125 V power outlet all in one
- Spill water tested
- UL Listed for countertop installation
- Permanent installation ready (suitable for MC cable or non-metallic sheath cable)
- Type A and C USB ports
- LED Light indicates power to the ports
- Durable: Push-down to pop-up function is rated for a minimum of 10,000 cycles
- Stability: Firm tower design
- Suitable for 20 Amp circuit, end of line

Ordering Information

Description	UPC	Catalog Number
20A 125V Tamper-Resistant Tri-Power Pop-Up Kitchen Counter Receptacle, Surface Mount	88377831053	RCT620NI

Finish	Color/Material
Brushed	Nickel

Listings

UL and cULus listed to UL498, Section 147

Specifications

Cover and Flange	Silicone & Die Cast Aluminum
Main Body	Engineered Thermoplastic PBT
Wiring Chamber	Die Cast Aluminum
Water Seals	Elastomers and Silicon

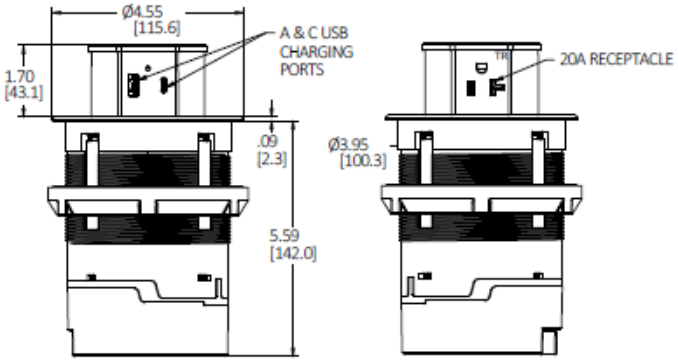

Performance

Electrical

Receptacle	20 Amp 125 Volt, Tamper-Resistant
Qi Rating	Certified 7.5 Watts
USB A Port	5 Amp at 5 Vdc
USB C Port	18 Watts at 9 Vdc
Circuit Rating	20 Amp non-feed through
Dielectric Voltage	Withstands 2,000V minimum

Mechanical

Terminal Accommodation	#12 AWG copper stranded or solid conductor only
Terminal Identification	Terminals identified in accordance with UL 498 and CSA

Environmental

Flammability	UL 94V-2
Operating Temperature	Maximum continuous 75°C, minimum -40°C (w/o impact)

Resources

Sales Drawing
Catalog Page
Installation Instructions

Hubbell Wiring Device-Kellems • Hubbell Incorporated (Delaware) • 40 Waterview Drive • Shelton, CT 06484
Phone (800) 288-6000 • Fax (800) 255-1031 • Specifications subject to change without notice.

HUBBELL®
Wiring Device-Kellems