Solar-Ready
Combination Service Entrance Device (CSED)

WARNINGS:

- **TO AVOID FIRE, SHOCK, OR DEATH, TURN OFF ALL POWER SERVICING THE DEVICE, TEST THAT POWER IS OFF BEFORE SERVICING OR WIRING,** and ensure that connections are made in the same sequence as the existing device connections.
- This equipment **MUST BE** installed and serviced by an electrician.
- Leviton circuit breakers **MUST BE** used with a Leviton circuit breaker enclosure.
- Before providing power to the load center, check all electrical connections and confirm that the wiring is correct.
- Replace all doors and covers before connecting power to this equipment.
- To be installed and/or used in accordance with electrical codes and regulations.

CAUTIONS:

- Use **ONLY** approved fittings and clamps to avoid damage to wires.
- Ensure that all branch circuit breakers are in the OFF position before installing them into the panel.

PK-A3419-10-00-5A

INSTALLATION INSTRUCTIONS **ENGLISH**

Installation

1. Remove the compartment covers.

a.

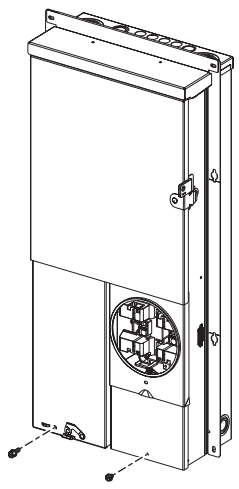

b.

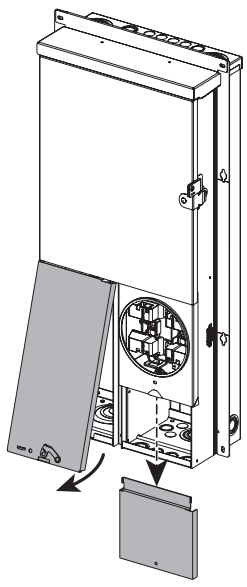

2. Install the 5th jaw application (optional).

NOTE: The wire retention channel can be used to ensure that the wire stays in place.

a.

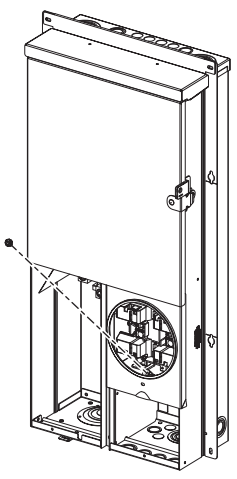

b.

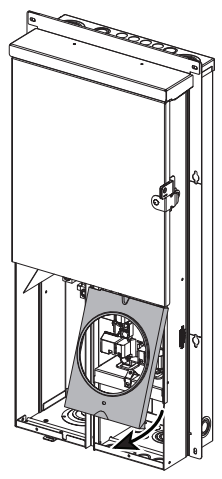

c. Connect to the neutral bar, using the opening next to the ground lug in the service chamber.

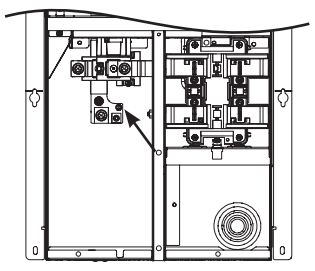

3. Remove the load center door (optional).

The load center door can be removed for easier installation.

NOTE: When installation is complete, align the door hinge with the hinge pin and insert downward until door is seated.

a.

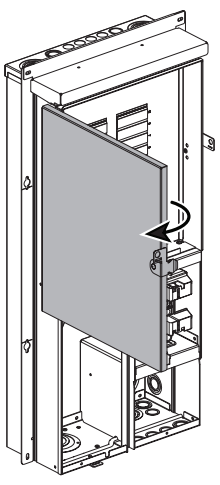

b.

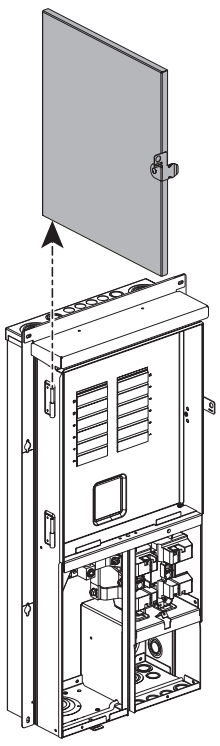

4. Mount the enclosure.

NOTES:

- This panel series can only be mounted in a semi-flush manner. Consult the local electrical code to determine the proper installation height. The right side of the panel has a meter socket centerline marking that can be referenced to achieve the proper installation height.
- -SRL models are suitable only for use as service equipment. Install no more than six main disconnecting means.

To mount the unit, use the mounting brackets on the left and right outside perimeter of the panel. Use outdoor approved screws or nails (not provided) in the mounting brackets to secure the enclosure to the wall studs.

Mount a minimum of 12 inches away from an adjacent wall to the right side of the panel to allow ample room for accessing the door latch.

Install unit within rough opening of dwelling, and seal off all gaps around the flange and enclosure body to the rough opening in the wall. Apply a minimum 1-inch overlap of all-weather flashing tape, or equivalent, over mounting flanges.

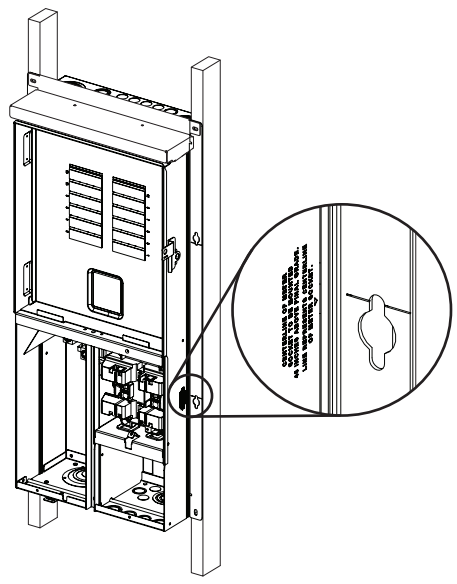

5. Remove knockouts for bottom feed wiring.

NOTES:

- For top feed wiring, use the overhead tunnel accessory (sold separately) and follow the instructions.
- Before removing any knockouts from the enclosure, consult the local electrical code to determine the knockout requirements.

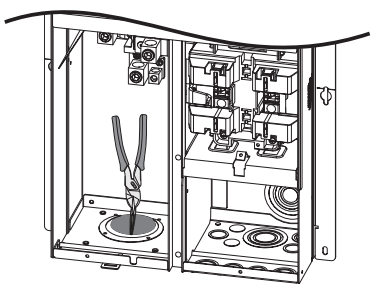

a. Strike the center of the knockout.

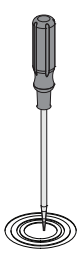

b. Pry each ring up, one at a time, with a pair of pliers.

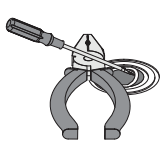

c. Grip both ends with the pliers to bend the rings until they disconnect from the enclosure.

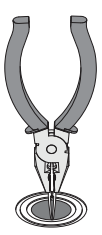

6. Connect to phase, neutral, and ground conductors.

CAUTION: Use ONLY approved fittings and clamps to avoid damage to wires.

a. Bring the phase, neutral, and ground conductors into the enclosure's service chamber.

b. Connect the phase, neutral, and ground conductors to the appropriate terminals and torque to spec.

NOTE: For torque specifications, refer to the wire terminations table located on the other side of this instruction sheet and also on the inside of the panel door.

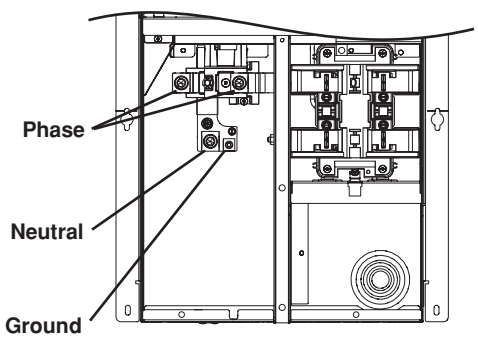

WEB VERSION

7. Remove the deadfront.

NOTES:

- Twist-outs must be removed for each position that contains a branch circuit breaker. Fill any unused open spaces in the cover, using filler plates (sold separately).
- To reinstall the deadfront, align and slide it inward above the rails on each side, until bottom portion of deadfront is seated in enclosure. Secure bottom of deadfront with securing screw.

a.

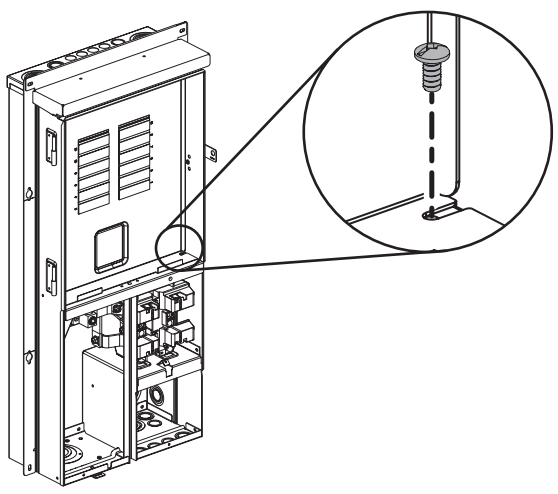

b.

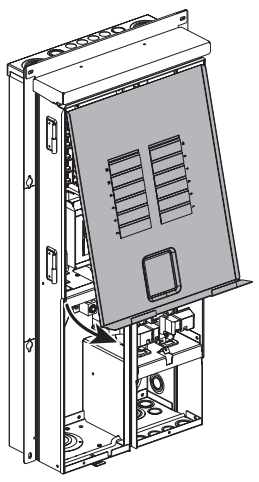

C. To remove twist-outs, first strike with a screwdriver, and then twist with pliers until detached.

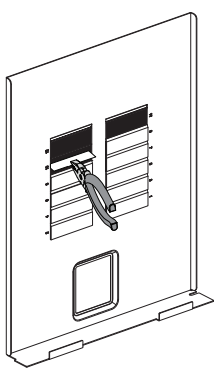

8. Strip and connect wires.

WARNING: Leviton circuit breakers MUST BE used with a Leviton circuit breaker enclosure.

WARNING: Ensure that the main breaker is in the OFF position before installing any branch circuit breakers.

CAUTION: Ensure that all branch circuit breakers are in the OFF position before installing them into the panel.

Strip and connect the load phase and load neutral wires to the load terminals, and the ground wire to the ground bus of the circuit breaker enclosure.

NOTE: For stripping and torque specifications, refer to the wire terminations table located below and also on the inside of the panel door.

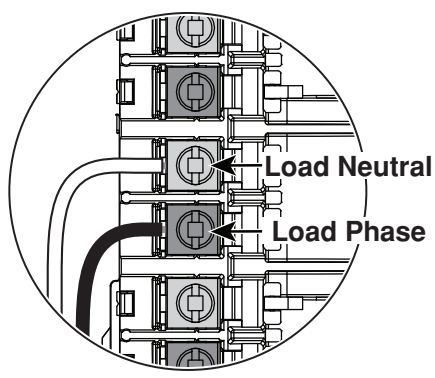

9. Install branch circuit breakers.

WARNING: TO AVOID RISK OF FIRE, check all wiring and ensure that all circuit breakers are installed in the proper position before energizing the panel.

Align the hooks and guides of the branch circuit breaker with the panel, and press until the breaker snaps into place.

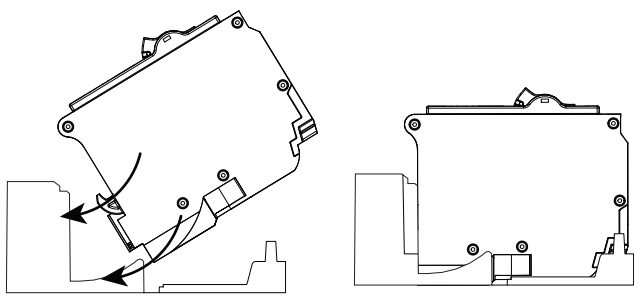

10. Install the Current Transformer (CT) cores (optional).

Attach the CT cores onto their respective Phase A and Phase B load bars, and then follow the instructions provided by their manufacturer.

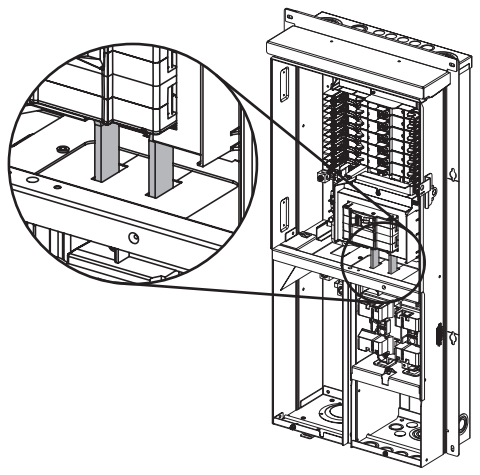

11. Complete the installation.

WARNING: Before providing power to the load center, check all electrical connections and confirm that the wiring is correct.

WARNING: Replace all doors and covers before connecting power to this equipment.

NOTE: The sealing ring is not included with the load center. Once the meter is installed, accessory part # LRING, or a utility-supplied sealing ring, must be installed to secure the meter to the cover.

Ensure that the main and all branch circuit breakers are in the OFF position. To energize, first turn ON the main breaker, and then turn ON each individual branch circuit breaker.

TERMINATIONS

Termination Point	Wire Material	Wire Gauge	Strip Length	Torque
Service Phase & Neutral	Copper / Aluminum	#3 AWG - 300 MCM	1.0 in.	275 in.-lbs
Service Conduit Ground	Copper / Aluminum	#8 AWG - 2/0 AWG, Stranded	0.75 in.	50 in.-lbs
	Copper	#14 AWG - #10 AWG, Solid or Stranded		50 in.-lbs
	Aluminum	#12 AWG - #10 AWG, Solid		50 in.-lbs
Ground	Copper / Aluminum	#4 AWG - 2/0 AWG	1.0 in.	50 in.-lbs
Feed-Thru Neutral	Copper / Aluminum	#4 AWG - 2/0 AWG	1.0 in.	120 in.-lbs.
Load Phase (brass) & Load Neutral (silver)	Copper	(1) #4 AWG - #8 AWG, Stranded	0.4 in.	45 in.-lbs
		(1) #10 AWG, Solid or Stranded		35 in.-lbs
		(2) #14 AWG - #10 AWG, Solid		35 in.-lbs
		(1) #12 AWG - #14 AWG, Solid or Stranded		25 in.-lbs.
		(2) #14 AWG or (2) #12 AWG, Stranded		25 in.-lbs.
	Aluminum	(1) #4 AWG - #6 AWG, Stranded		45 in.-lbs
		(1) #8 AWG, Stranded		35 in.-lbs
		(2) #12 AWG - #10 AWG, Solid		35 in.-lbs
		(1) #10 AWG - #12 AWG, Solid		25 in.-lbs.
		(2) #12 AWG or (2) #10 AWG, Solid		25 in.-lbs.
Neutral & Equipment Ground Bar	Copper/ Aluminum	(1) #6 AWG - #4 AWG, Stranded	0.5 in.	35 in.-lbs
		(1) #8 AWG, Stranded		25 in.-lbs
		(1) #14 AWG - #10 AWG, Solid or Stranded		20 in.-lbs
	Copper	(2) #14 AWG - #10 AWG, Solid or Stranded		25 in.-lbs
		(1) #14 AWG and (1) #12 AWG, Solid		25 in.-lbs
		(1) #14 AWG and (1) #10 AWG, Solid or Stranded		25 in.-lbs
		(1) #12 AWG and (1) #10 AWG, Solid		25 in.-lbs
	Aluminum	(2) #12 AWG - #10 AWG, Solid		20 in.-lbs
		(1) #12 AWG and (1) #10 AWG, Solid		20 in.-lbs
Neutral Bar	Copper/ Aluminum	#4 AWG - #1 AWG, Stranded	0.5 in.	50 in.-lbs
		#8 AWG - #6 AWG, Stranded		30 in.-lbs
	Copper	#14 AWG - #10 AWG, Solid or Stranded		30 in.-lbs
	Aluminum	#12 AWG - #10 AWG, Solid		30 in.-lbs

TRADEMARK DISCLAIMER: Use herein of third party trademarks, service marks, trade names, brand names and/or product names are for informational purposes only, are/may be the trademarks of their respective owners; such use is not meant to imply affiliation, sponsorship, or endorsement.

Patents covering this product, if any, can be found on Leviton.com/patents.

FOR CANADA ONLY

For warranty information and/or product returns, residents of Canada should contact Leviton in writing at **Leviton Manufacturing of Canada ULC** to the **attention of the Quality Assurance Department, 165 Hymus Blvd, Pointe-Claire (Quebec), Canada H9R 1E9 or by telephone at 1 800 405-5320.**

LIMITED PRODUCT WARRANTY

For Leviton's limited warranty, go to *www.leviton.com*. For a printed copy of the warranty you may call 1-800-323-8920 or write to Leviton Manufacturing Co., Inc., Att: Customer Service Dept., 201 North Service Road, Melville, New York 11747.

© 2021 Leviton Mfg. Co., Inc.

WEB VERSION