Leviton Load Center Outdoor Panel

Cat. No. LR320-BDD

APPLICATION

The Leviton Outdoor Load Center is easy to install and designed to withstand the elements. It features a gray, weather-resistant enclosure with a solid cover housing white circuit breakers.

FEATURES AND BENEFITS

- Terminate all hot and neutral wires at custom lugs in the panel, not at the circuit breaker*
- The entire panel can be wired at rough-in without circuit breakers installed
- At final installation, simply plug-on the circuit breaker
- No pigtails on circuit breakers
- Copper bus is standard
- Leviton GFCI, AFCI and Dual Function circuit breakers feature our patented reset lockout and will not reset if ground- or arc-fault protection is compromised
- As the first GFCI circuit breakers on the market that meet the newest/May 2021 UL requirements**, Leviton GFCIs set the bar for home safety
- Intuitive LEDs help communicate trip condition and type of fault (AF/GF) and remain illuminated even when the circuit breaker is in the tripped state

**For applications up to 60A when using copper wire; or 50A when using aluminum wire*

***The UL943 standard no longer exempts GFCI circuit breakers from detecting and warning when the trip solenoid and/or switching semiconductor fails in the "open" state, rendering the GFCI circuit breaker incapable of tripping in response to a fault condition, resulting in complete loss of GFCI protection. However, the effective date of this requirement is 8/11/24. Leviton GFCIs have always met the more stringent safety requirement.*

ELECTRICAL SPECIFICATIONS

Short Circuit Current Rating: 22 KA
Voltage: 120/240 VAC
Bus bar rating (all panels): 225A

MECHANICAL SPECIFICATIONS

Busbar Material: Copper, Bright Tin-Plated
Enclosure Material: Galvanized Steel, Gray Baked Enamel
Ground Connection: 4 AWG - 2/0 AWG Cu/Al
Supply Connections: 3 AWG - 300 MCM Cu/Al

ENVIRONMENTAL SPECIFICATIONS

NEMA Enclosure Type: NEMA 3R Outdoor
Operating Temperature: -40°C to 70°C

STANDARDS & CERTIFICATIONS

UL 67: File E480408
UL 50
UL 50E
UL 869A

WARRANTY INFORMATION

For Leviton's limited product warranty, visit www.leviton.com

Leviton Mfg. Co., Inc.
201 North Service Road, Melville, NY 11747 Tech Line: 1-800-824-3005 Fax: 1-800-832-9538 www.leviton.com
© 2023 Leviton Manufacturing Co., Inc. All rights reserved. Subject to change without notice.

PRODUCT SPECIFICATIONS

Outdoor Panel Specifications

Cat. No.	Number of Spaces	Current Rating (A)	Agency Listing
LR210-BDD	20	100	UL
LR212-BDD		125	
LR215-BDD		150	
LR220-BDD		200	
LR222-BDD		225	

NOTE: All Outdoor panels are NEMA Type 3R

Knockout Size Table

Label	Size (In)
B	1/2
C	3/4
D	1
E	1-1/4
F	1-1/2
G	2
H	2-1/2

DIMENSIONAL DRAWINGS

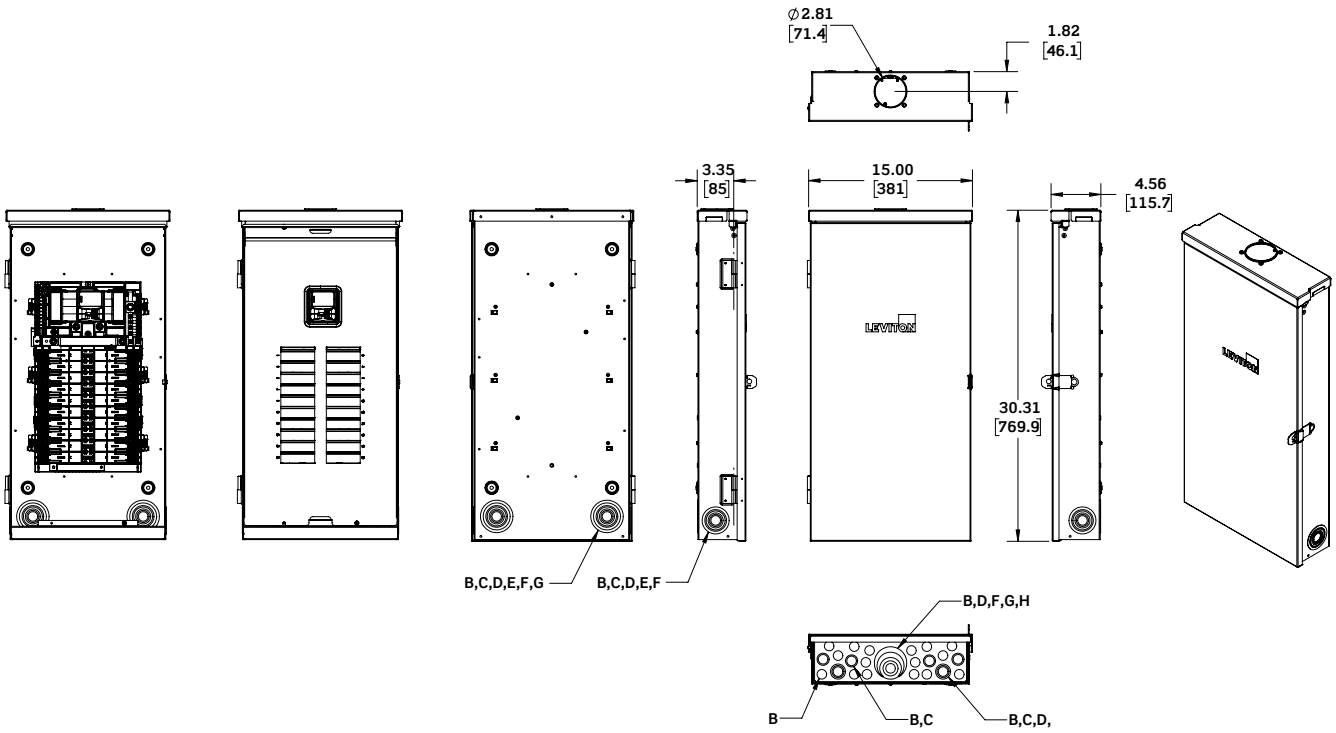

PRODUCT SPECIFICATIONS

Outdoor Panel Specifications

Cat. No.	Number of Spaces	Current Rating (A)	Agency Listing
LR312-BDD	30	125	UL
LR315-BDD		150	
LR320-BDD		200	
LR322-LDD		225	

Knockout Size Table

Label	Size (In)
B	1/2
C	3/4
D	1
E	1-1/4
F	1-1/2
G	2
H	2-1/2

DIMENSIONAL DRAWINGS

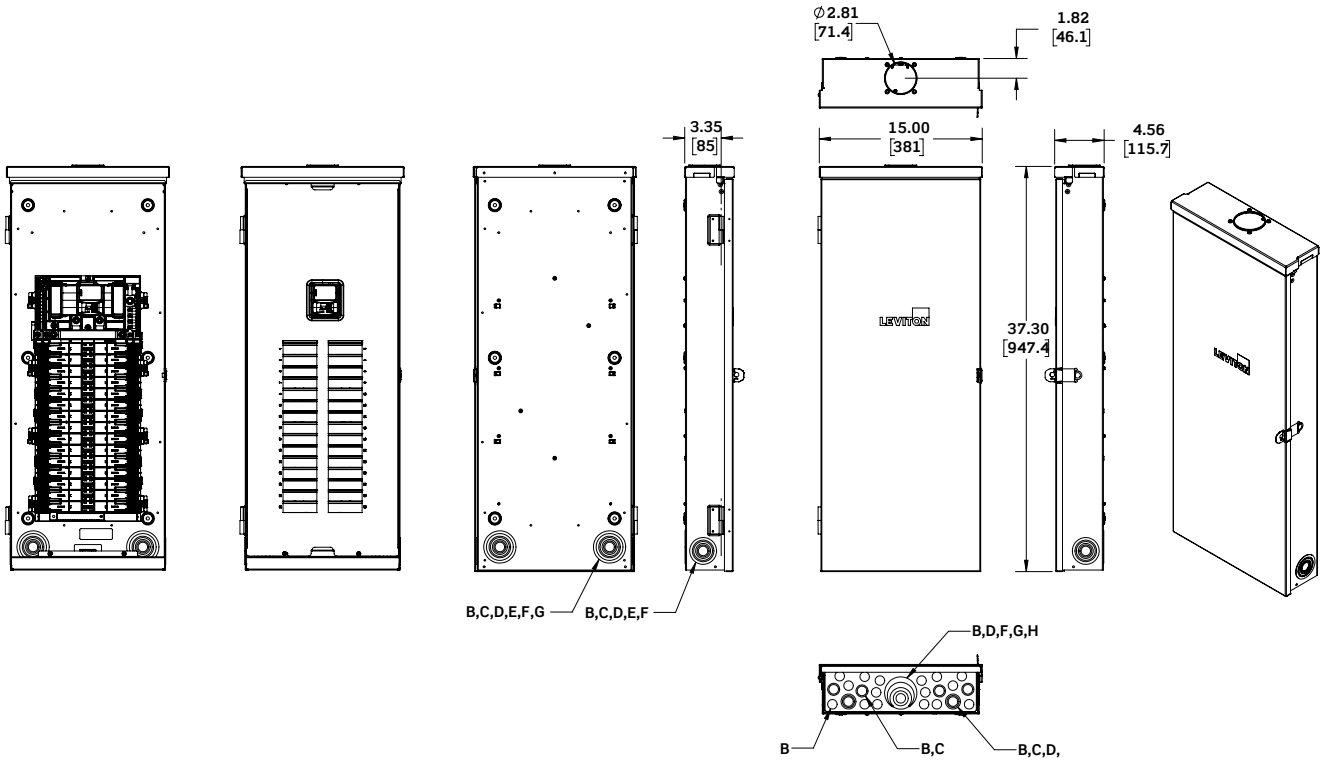

PRODUCT SPECIFICATIONS

Outdoor Panel Specifications

Cat. No.	Number of Spaces	Current Rating (A)	Agency Listing
LR415-BDD	42	150	UL
LR420-BDD		200	
LR422-BDD		225	
LR422-LDD			

Knockout Size Table

Label	Size (In)
B	1/2
C	3/4
D	1
E	1-1/4
F	1-1/2
G	2
H	2-1/2

DIMENSIONAL DRAWINGS

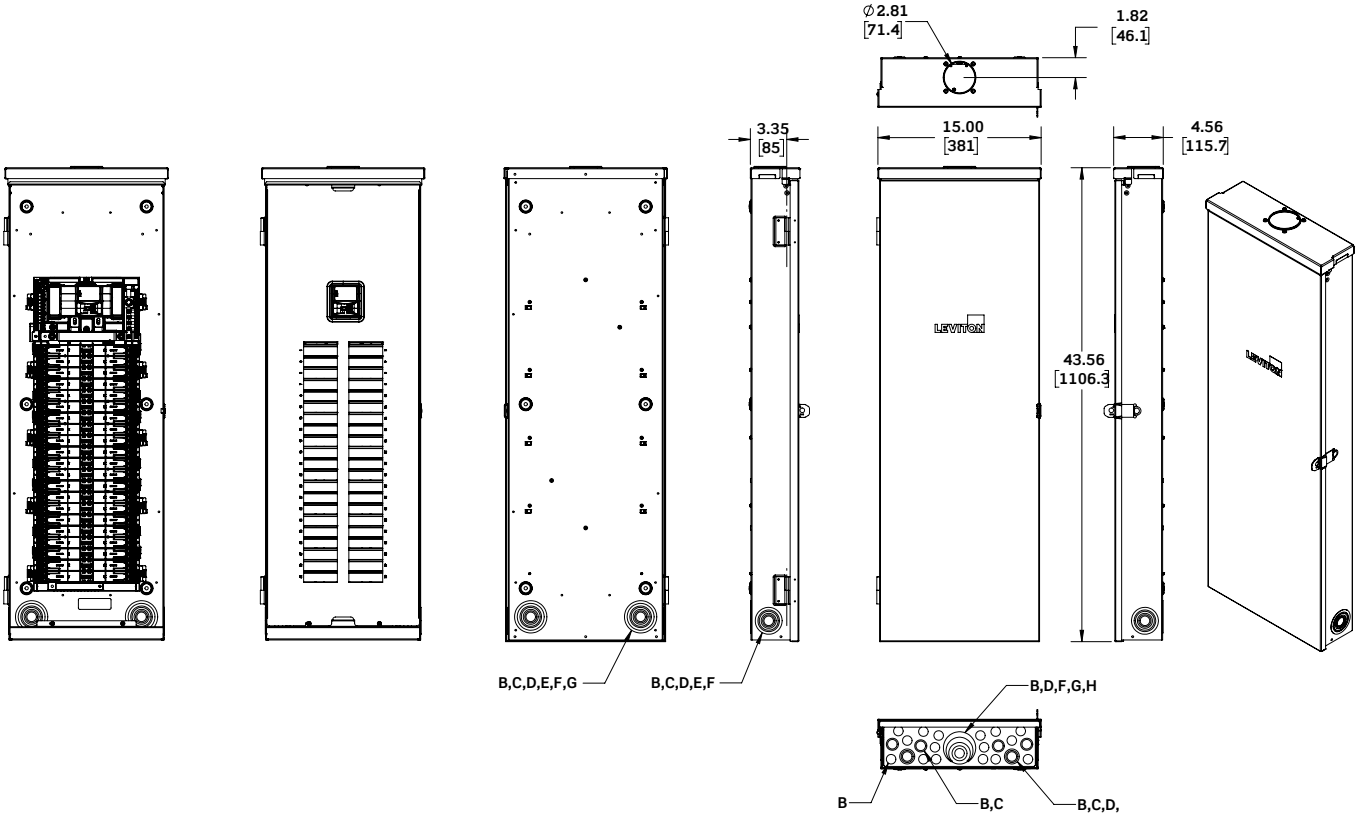

THE LEVITON LOAD CENTER - OUTDOOR

Leviton Manufacturing Co., Inc.
Tech Line: 1-800-824-3005
Mon-Fri 8am-10pm EST, Saturday 9am-7pm EST, Sunday 9am-5pm EST
For 24/7 product support visit **www.leviton.com/support**

Visit our Website at: www.leviton.com

© 2023 Leviton Manufacturing Co., Inc. All rights reserved.
All trademarks are the property of their respective owners.